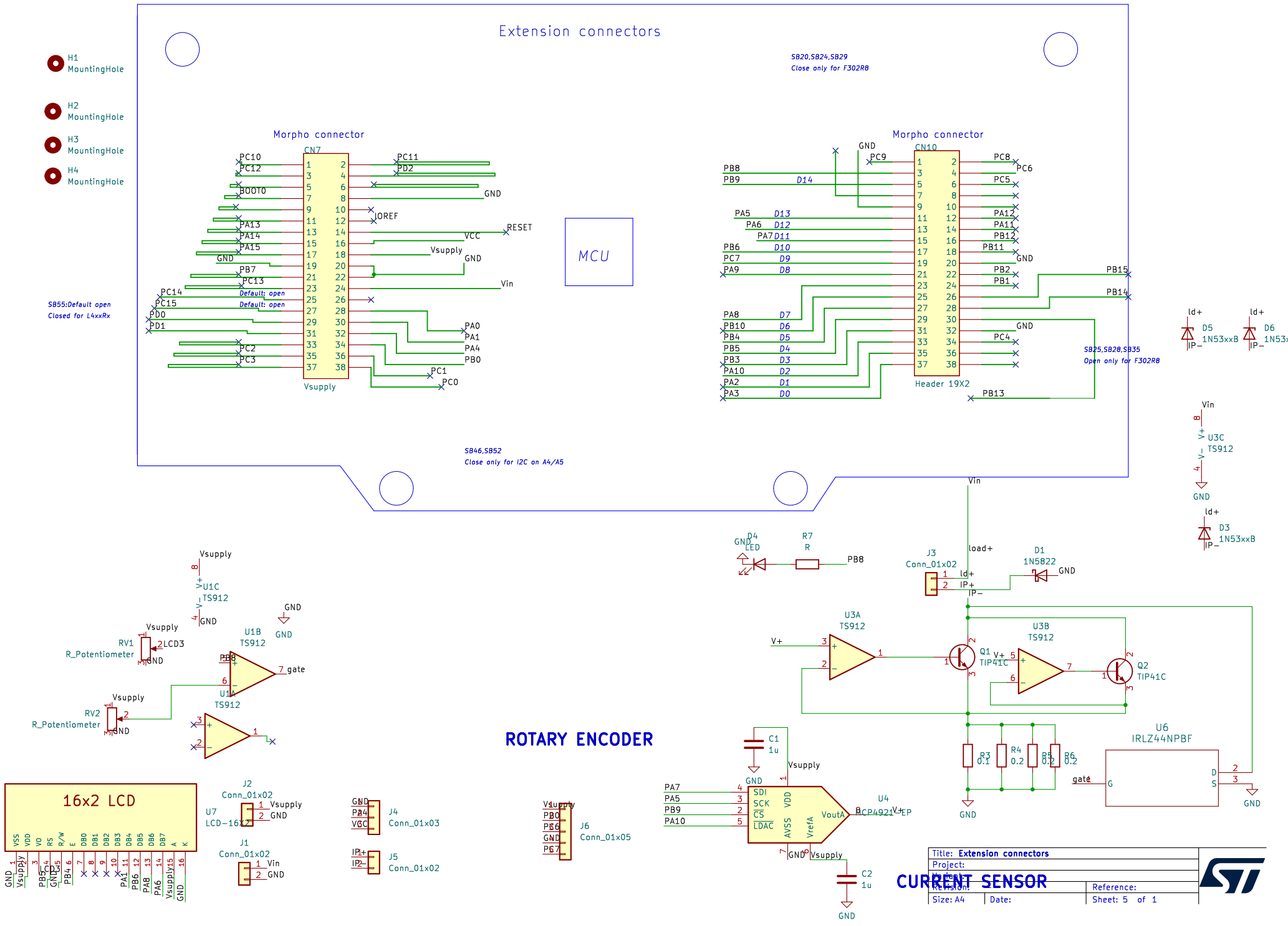
Extension connectors
H1 MountingHole
H2 MountingHole
H3 MountingHole
H4 MountingHole
SB20,SB24,SB29
Close only for F302R8
Morpho connector
CN7
Morpho connector
CN10
MCU
SB55:Default open
Closed for L4xxRx
Default: open
Default: open
Header 19X2
SB25,SB28,SB35
Open only for F302R8
SB46,SB52
Close only for I2C on A4/A5
D5 1N53xxB
D6 1N53xxB
D3 1N53xxB
U3C TS912
D4 LED
R7 R
J3 Conn_01x02
D1 1N5822
U1C TS912
U1B TS912
U1A TS912
RV1 R_Potentiometer
RV2 R_Potentiometer
U3A TS912
U3B TS912
Q1 TIP41C
Q2 TIP41C
R3 0.1
R4 0.2
R5 0.2
R6 0.2
U6 IRLZ44NPBF
ROTARY ENCODER
C1 1u
U4 MCP4921
C2 1u
16x2 LCD
J2 Conn_01x02
U7 LCD-16x2
J1 Conn_01x02
J4 Conn_01x03
J5 Conn_01x02
J6 Conn_01x05
CURRENT SENSOR
Title: Extension connectors
Project:
Revision:
Reference:
Size: A4
Date:
Sheet: 5 of 1