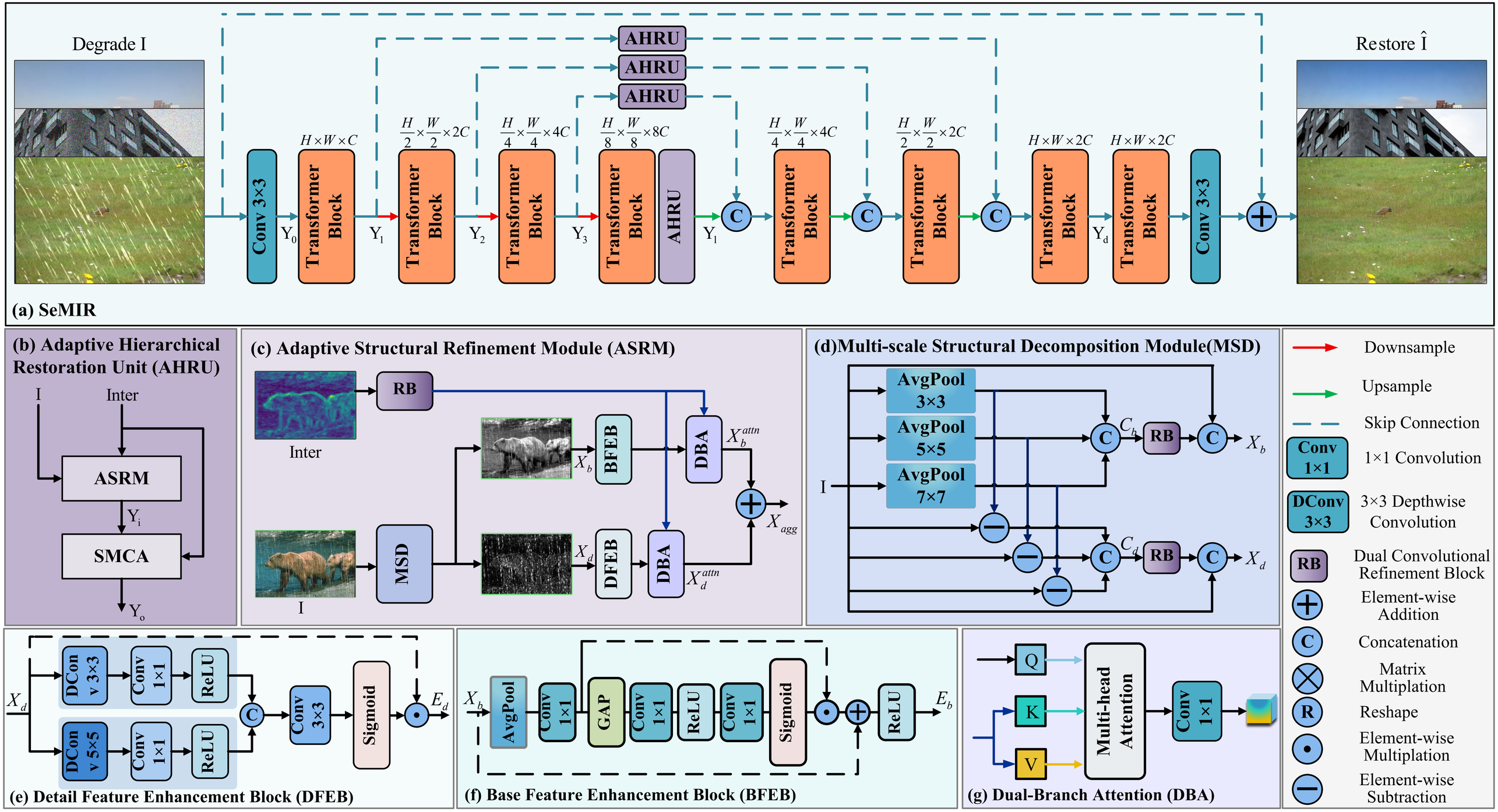
Degrade I
Restore Î
AHRU
AHRU
AHRU
Conv 3×3
Y0
Transformer Block
H×W×C
Y1
Transformer Block
H/2×W/2×2C
Y2
Transformer Block
H/4×W/4×4C
Y3
Transformer Block
H/8×W/8×8C
AHRU
Y1
C
Transformer Block
H/4×W/4×4C
C
Transformer Block
H/2×W/2×2C
C
Transformer Block
H×W×2C
Yd
Transformer Block
H×W×2C
Conv 3×3
(a) SeMIR
(b) Adaptive Hierarchical Restoration Unit (AHRU)
I
Inter
ASRM
Yi
SMCA
Yo
(c) Adaptive Structural Refinement Module (ASRM)
RB
Inter
I
MSD
Xb
BFEB
DBA
Xb attn
Xd
DFEB
DBA
Xd attn
Xagg
(d)Multi-scale Structural Decomposition Module(MSD)
AvgPool 3×3
AvgPool 5×5
AvgPool 7×7
I
Cb
RB
C
Xb
Cd
RB
C
Xd
Downsample
Upsample
Skip Connection
Conv 1×1
1×1 Convolution
DConv 3×3
3×3 Depthwise Convolution
RB
Dual Convolutional Refinement Block
Element-wise Addition
C
Concatenation
Matrix Multiplation
R
Reshape
Element-wise Multiplation
Element-wise Subtraction
Xd
DCon v 3×3
Conv 1×1
ReLU
DCon v 5×5
Conv 1×1
ReLU
C
Conv 3×3
Sigmoid
Ed
(e) Detail Feature Enhancement Block (DFEB)
Xb
AvgPool
Conv 1×1
GAP
Conv 1×1
ReLU
Conv 1×1
Sigmoid
ReLU
Eb
(f) Base Feature Enhancement Block (BFEB)
Q
K
V
Multi-head Attention
Conv 1×1
(g) Dual-Branch Attention (DBA)