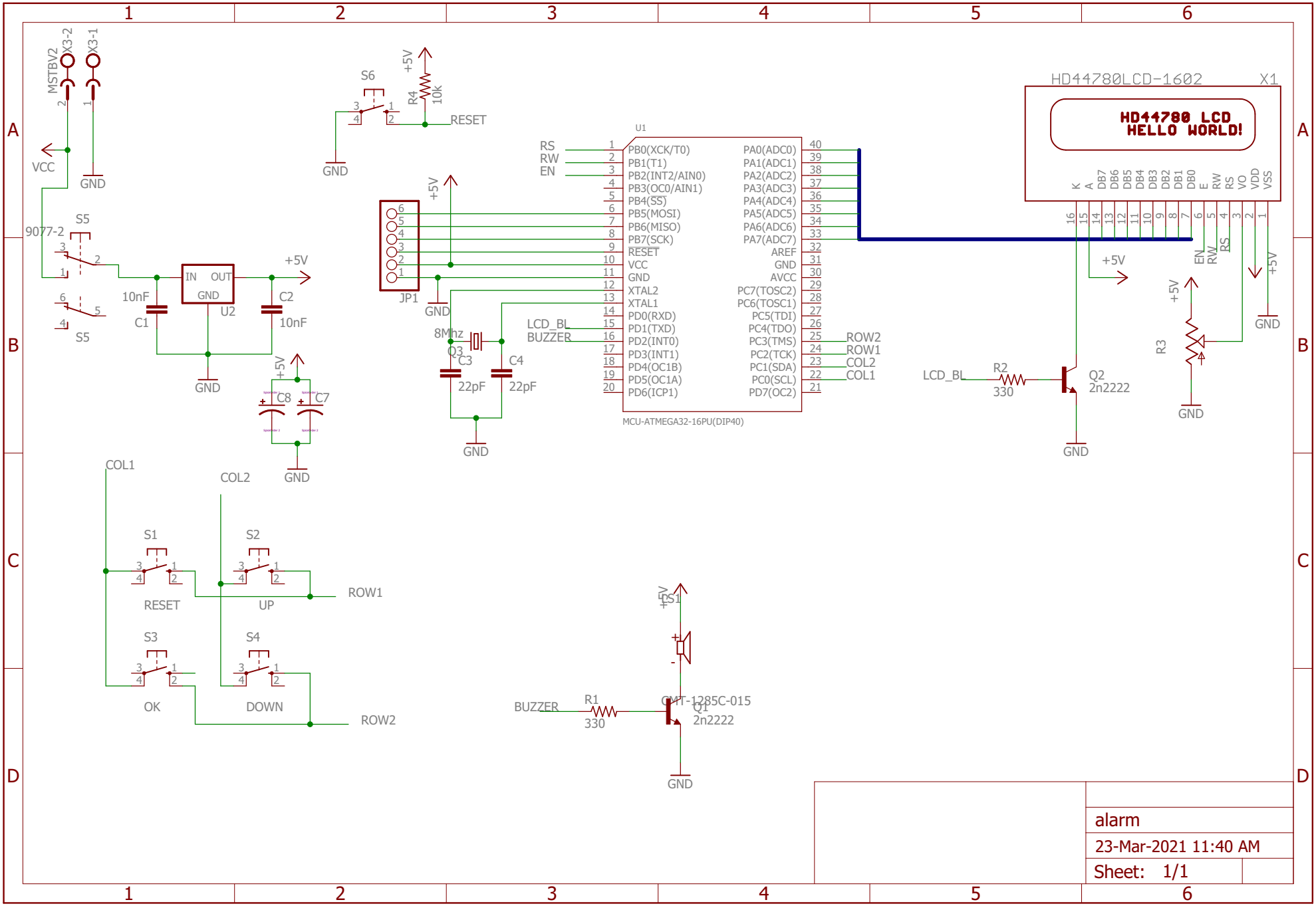
MSTBV2
X3-2
X3-1
VCC
GND
S5
9077-2
10nF
C1
IN
OUT
GND
U2
C2
10nF
+5V
C8
C7
S6
R4
10k
RESET
JP1
U1
RS
RW
EN
LCD_BL
BUZZER
PB0(XCK/T0)
PB1(T1)
PB2(INT2/AIN0)
PB3(OC0/AIN1)
PB4(SS)
PB5(MOSI)
PB6(MISO)
PB7(SCK)
RESET
VCC
GND
XTAL2
XTAL1
PD0(RXD)
PD1(TXD)
PD2(INT0)
PD3(INT1)
PD4(OC1B)
PD5(OC1A)
PD6(ICP1)
PA0(ADC0)
PA1(ADC1)
PA2(ADC2)
PA3(ADC3)
PA4(ADC4)
PA5(ADC5)
PA6(ADC6)
PA7(ADC7)
AREF
GND
AVCC
PC7(TOSC2)
PC6(TOSC1)
PC5(TDI)
PC4(TDO)
PC3(TMS)
PC2(TCK)
PC1(SDA)
PC0(SCL)
PD7(OC2)
ROW2
ROW1
COL2
COL1
MCU-ATMEGA32-16PU(DIP40)
8Mhz
Q3
C3
C4
22pF
22pF
HD44780LCD-1602
X1
HD44780 LCD
HELLO WORLD!
K
A
DB7
DB6
DB5
DB4
DB3
DB2
DB1
DB0
E
RW
RS
VO
VDD
VSS
R2
330
Q2
2n2222
R3
COL1
COL2
S1
S2
S3
S4
RESET
UP
OK
DOWN
ROW1
ROW2
BUZZER
R1
330
Q1
2n2222
CS1
CMT-1285C-015
alarm
23-Mar-2021 11:40 AM
Sheet: 1/1