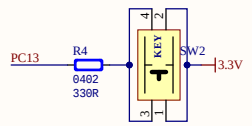

用户按键
User KEY

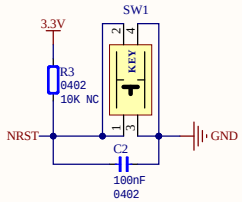

复位电路
Reset circuit

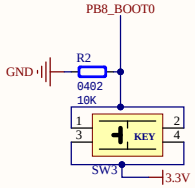

BOOT设置
BOOT Settings

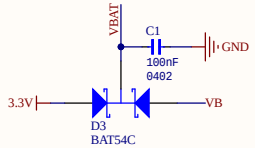

RTC电源
RTC circuit

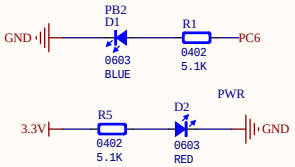

指示灯
Indicator light

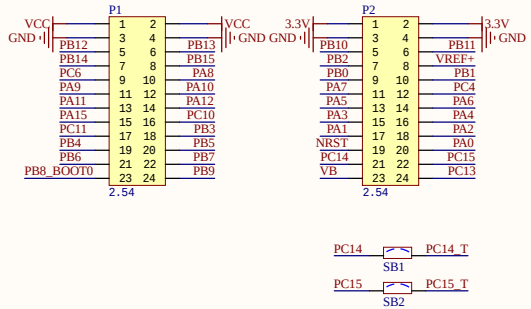

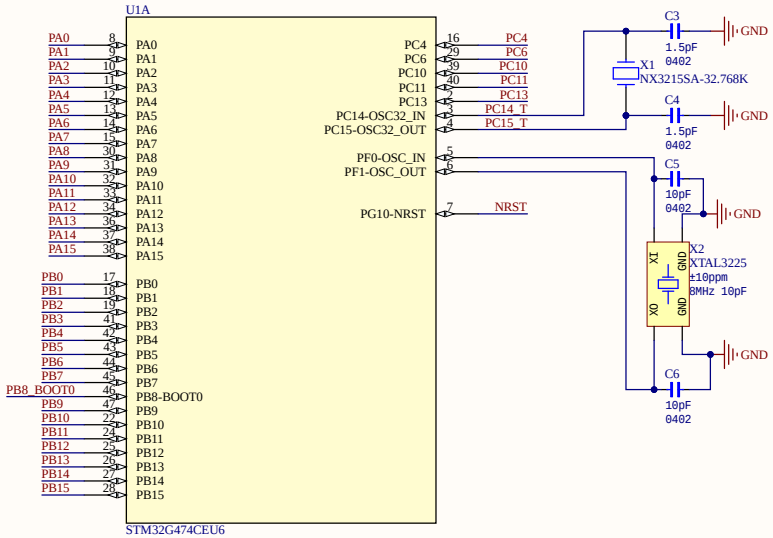

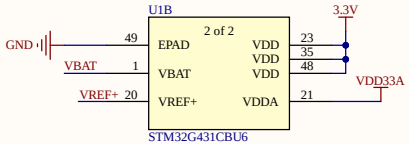

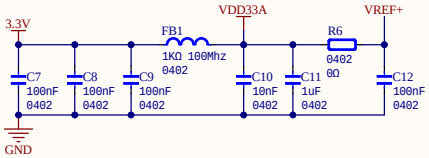

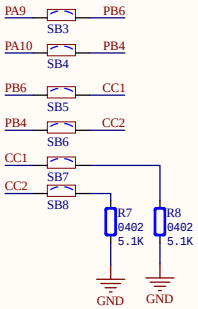

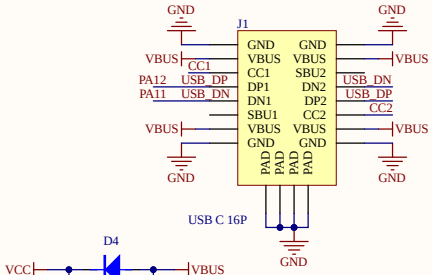

Type-C 接口
Type-C interface

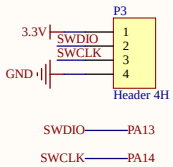

SW 调试下载接口
SW debug download interface

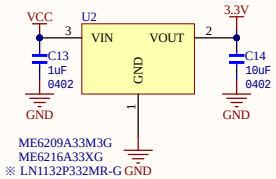

VCC -> 3.3V 电源转换
VCC -> 3.3V Power conversion
VCC IN: 3.3V - 5.5V

WeAct Studio

Title: STM32G474 Core Board L		
Size: A3	Number	Revision: V1.0
Date: 2/09/2024	Sheet of	Drawn By: L.Schuyix
File: F:\WeActStudio\..\WeAct-STM32G47x_Core_Board_L.SchDoc		