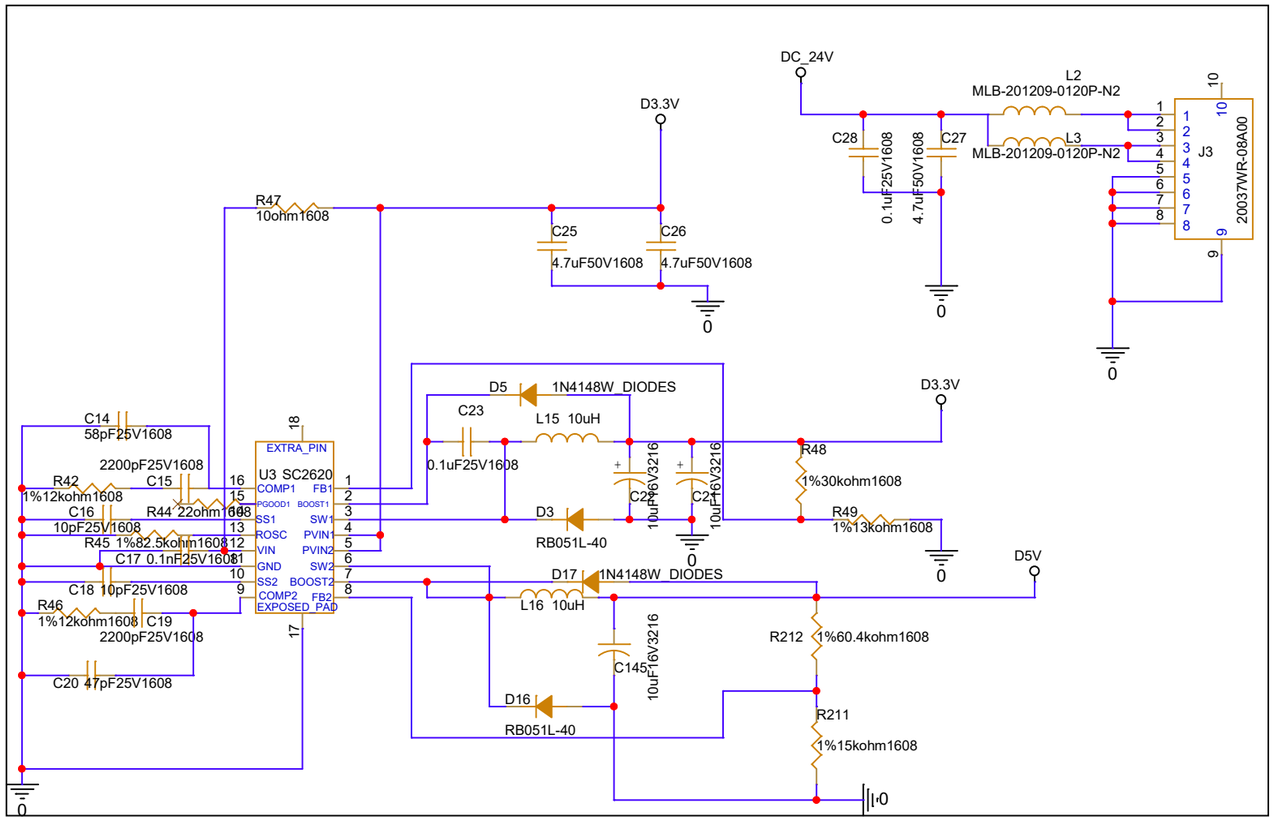

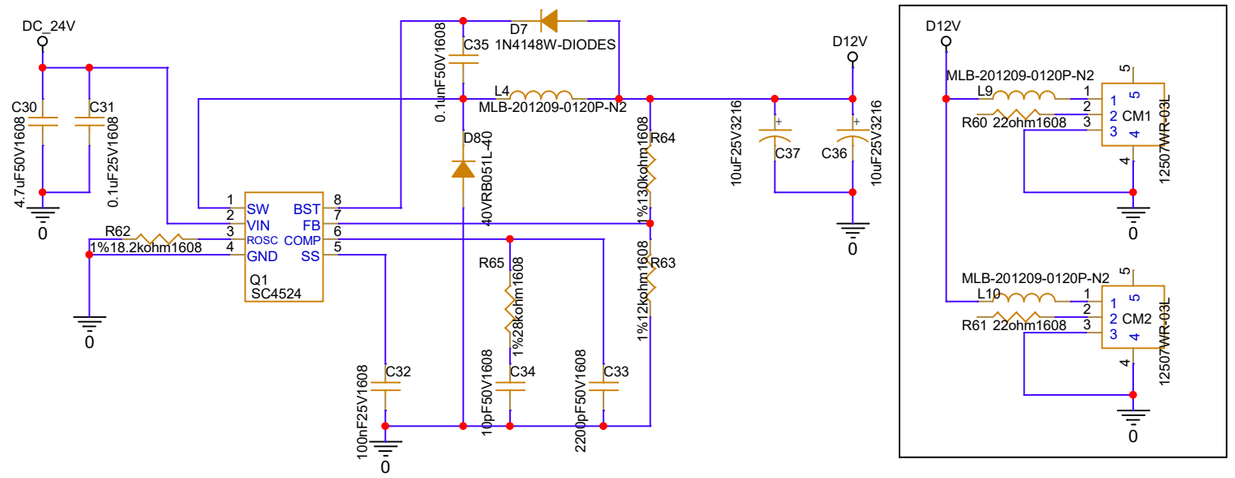

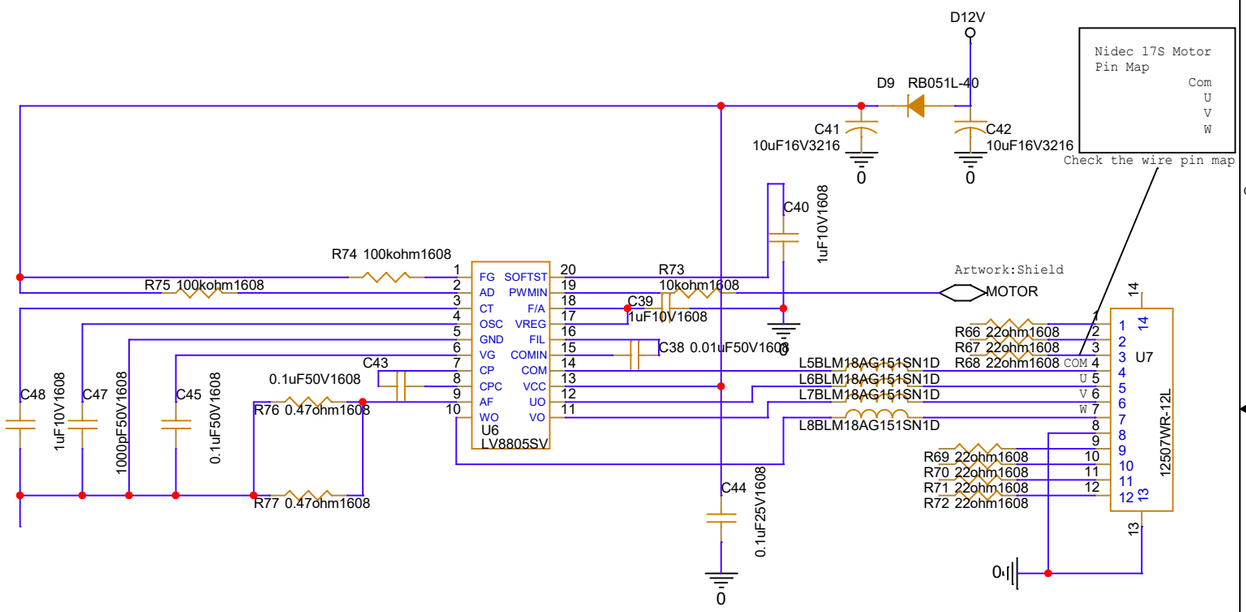

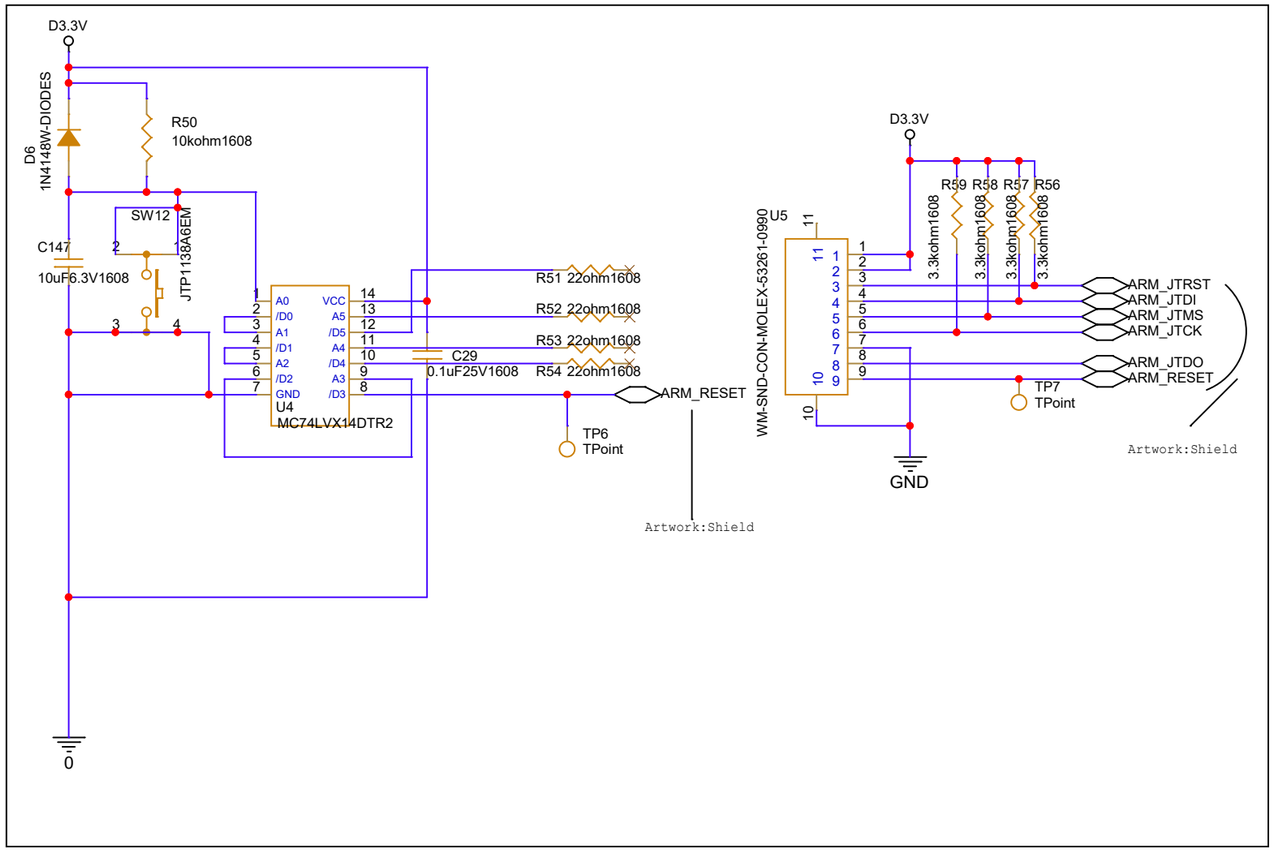

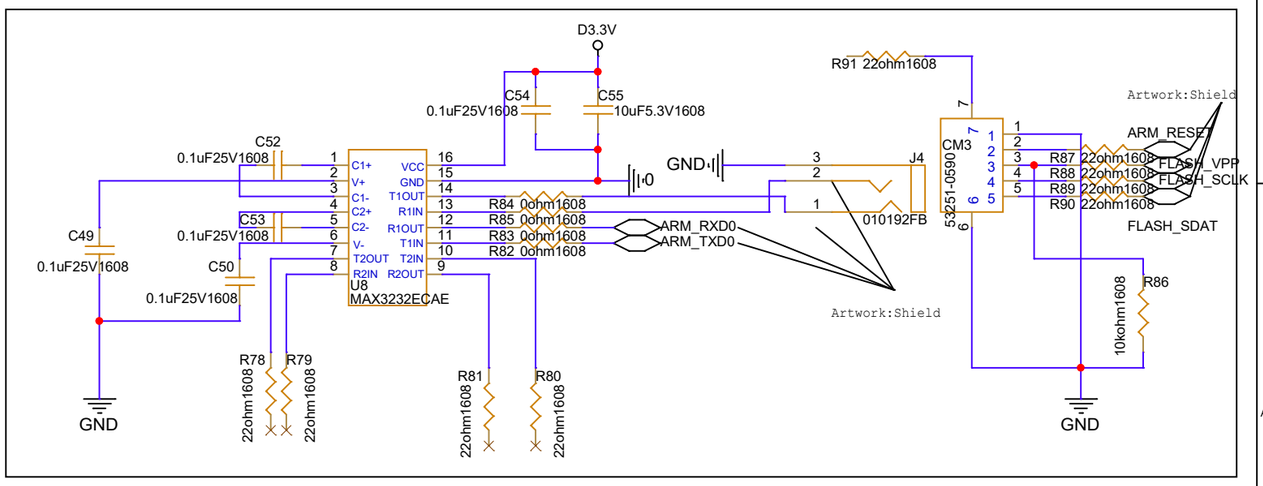

By 공병현

Title

<Title> laser controller

Size	Document Number	Rev
A3	<Doc> power module	Rev

Date: Thursday, December 21, 2023 Sheet 2 of 3