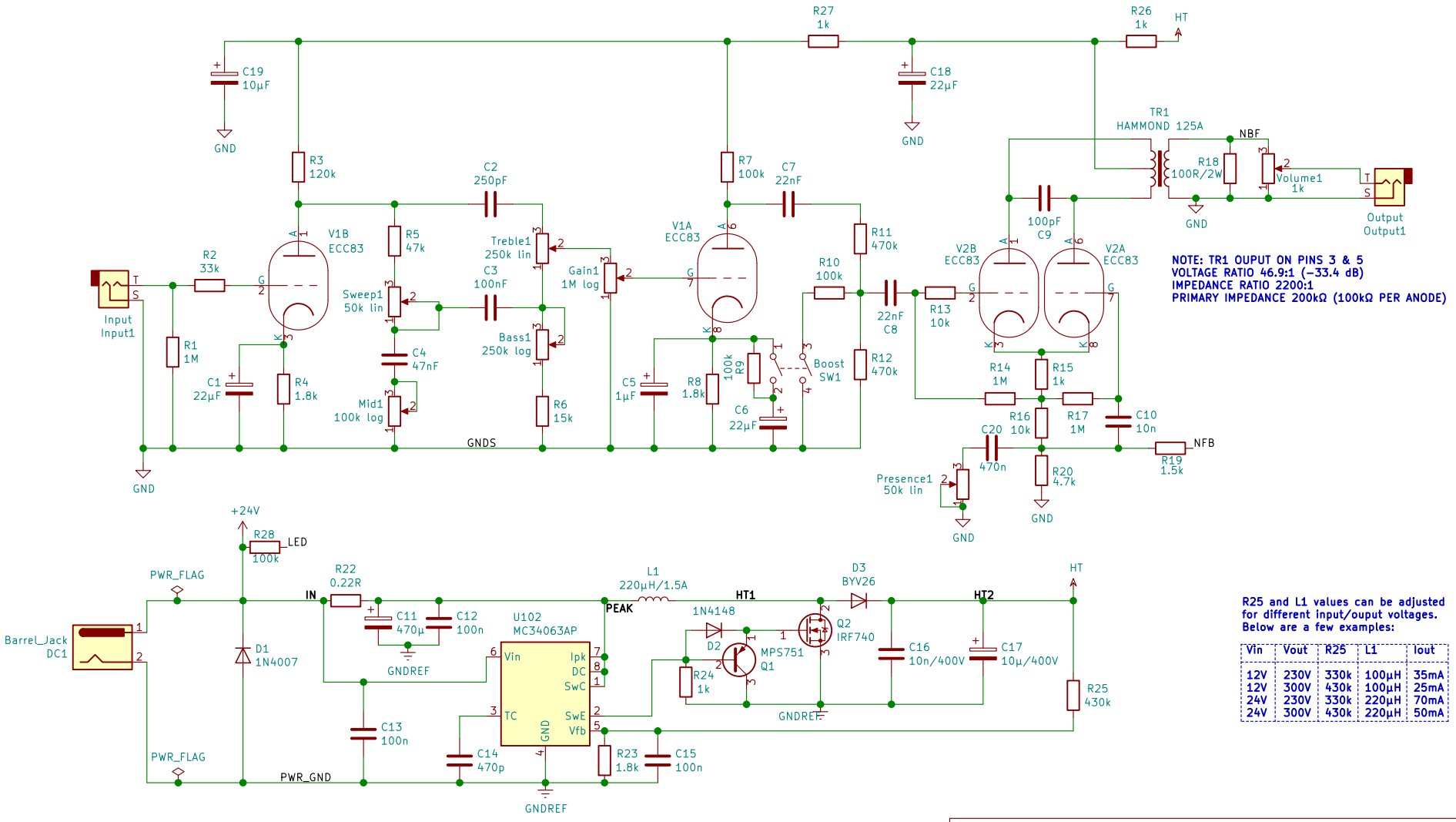

R25 and L1 values can be adjusted for different input/ouput voltages. Below are a few examples:

Vin	Vout	R25	L1	Iout
12V	230V	330k	100µH	35mA
12V	300V	430k	100µH	25mA
24V	230V	330k	220µH	70mA
24V	300V	430k	220µH	50mA

http://www.projetg5.com
with A-wai Amplification and LemonAmps
Licence under Creative Commons BY-NC-SA 4.0

http://www.projetg5.com

Sheet: /
File: préampli_G5.sch

Title: Preamp G5 with Pistortion Sytem

Size: A4	Date: 2019-05-24	Rev: RC5
KiCad E.D.A. kicad (5.1.2)-1		Id: 1/1