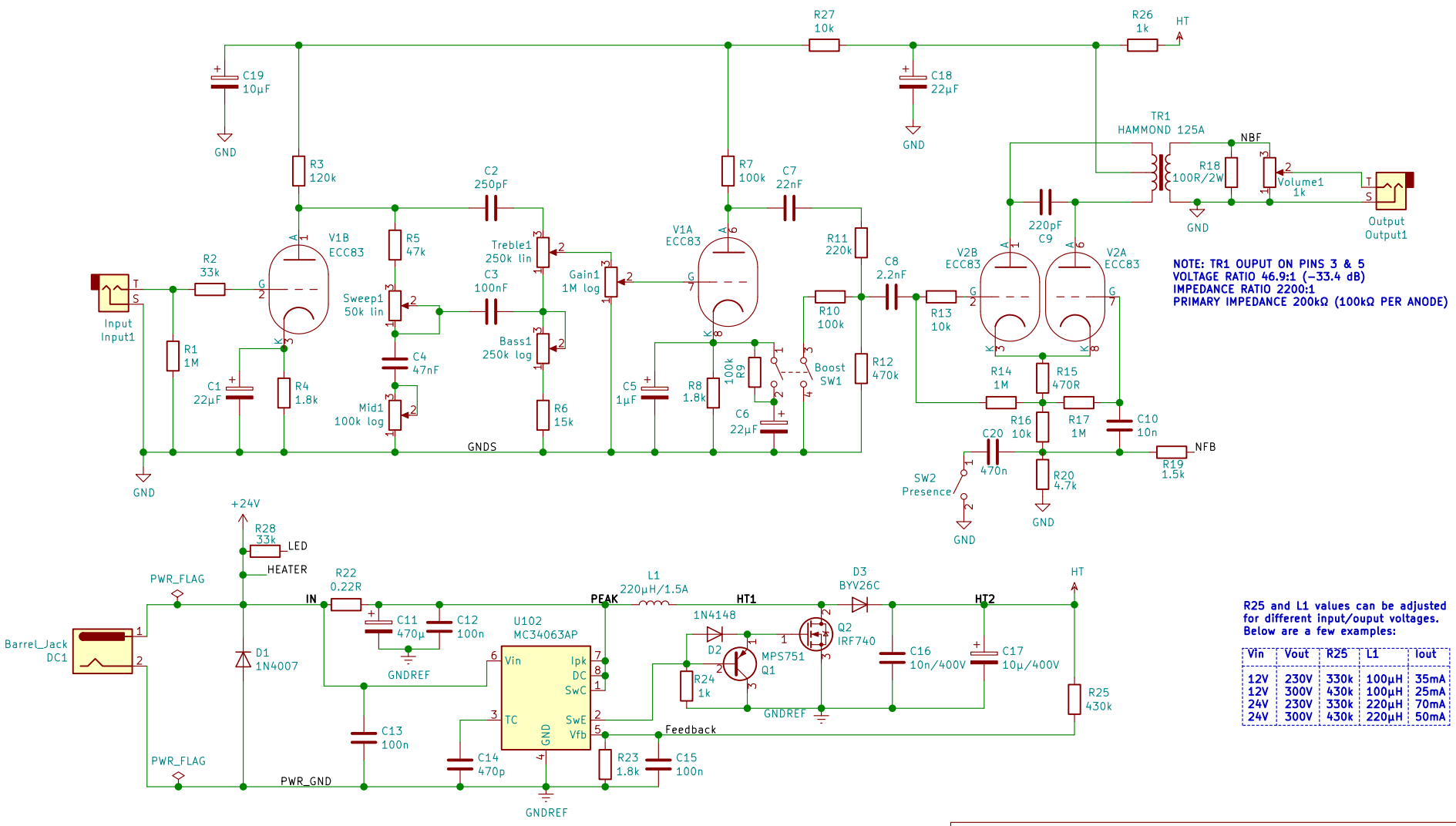


R25 and L1 values can be adjusted for different input/ouput voltages. Below are a few examples:

| Vin | Vout | R25 | L1 | Iout |
|---|---|---|---|---|
| 12V | 230V | 330k | 100µH | 35mA |
| 12V | 300V | 430k | 100µH | 25mA |
| 24V | 230V | 330k | 220µH | 70mA |
| 24V | 300V | 430k | 220µH | 50mA |

http://www.projetg5.com
with A-wai Amplification and LemonAmps
Licence under Creative Commons BY-NC-SA 4.0

**http://www.projetg5.com**

Sheet: /
File: préampli_G5.sch

**Title: Preamp G5 with Pistortion Sytem**

| | | |
|---|---|---|
| Size: A4 | Date: 2019-07-01 | Rev: RC6 |
| KiCad E.D.A. kicad (5.1.2)-2 | | Id: 1/1 |