Gym Space Monitoring System

Requirements Definition Document

RDD Version 2.0

Team T08

31 March 2026

Nathan McConnell (Manager)

Ashton Langen

Kevin Rouzaud

Mckenzie Johnston

Julia Marsh

CS 460 Software Engineering

Table Of Contents

1 Introduction **3**

2 Definition of Terms **4**

3 Objectives **5**

4 System Organization **5**

4.1 Entry and Primary Monitoring Zones 7

4.2 Zone-Specific System Integration 7

4.3 Privacy and Administrative Support 8

5 Interfaces **8**

5.1 System Inputs 9

5.2 System Outputs 10

6 Capabilities **11**

7 Constraints **14**

8 Conclusion **16**

9 References **17**

10 Change Log **18**

1 Introduction

As modern gym spaces evolve into complex, multi-room facilities offering diverse activities, the challenge of ensuring member safety and optimizing space usage continues to increase, as traditional manual supervision becomes less effective at scale. The Gym Space Monitoring system (GSMS) is designed to automate the oversight of diverse exercise environments, from the largest of free weight rooms to the secluded and more personal workout classrooms. The system offers a solution to gym scalability without sacrificing member safety and overall building management principles.

The gym space monitored in this design document is a 24-hour facility with members of various ages, backgrounds, and fitness capabilities. The members sign up for the gym and provide only simple information such as name, date of birth, payment information, and fitness goals as they sign up and agree to the terms of service. For the monitoring of this space the GSMS is geared to support gym members through continuous, automated monitoring through the help of computer vision technology, along with building maintenance and safety checks in cases of emergency or upkeep of all locations within the gym spaces. Additionally, we aim to create a comforting and safe space for all gym members, providing the gym space with a Bulky Buzzer which gets alerted if a fellow gym member is detected to be making excessive noise or disruptive behavior to the other members. All of this is supported by a multimodal framework, which transforms raw data from environmental sensors and video feeds into actionable insights, in the form of alerts and alarms directed at staff or, in some cases, managers. Along with a website which users can use to request classes or look at tracked capacity data of the gym in order to plan their visit to their liking, all data is stored in data stores so the system can harmoniously store as well as direct data to appropriate components, making our data as transparent to members as possible.

To achieve this high-performance environment, the GSMS relies on a sophisticated integration of hardware and software components. The following sections provide a comprehensive breakdown of the system architecture. In *Section 2,* we will discuss definitions of the terms used throughout this document. In *Section 3,* the objectives of the system will be explicitly stated and expanded upon, as all design decisions of the GSMS are rooted in these defined goals. *Section 4* presents the organization of the system, which involves a list of components, their general location within the gym, as well as their purpose. *Section 5* will go into further detail about system components and how they interface with each other to provide the desired output. *Section 6* will list the capabilities of the system once again, contingent on what objectives we have set for ourselves; these are the mechanisms we use to fulfill the objectives. *Section 7* will discuss the constraints that we must be aware of as we move forward with the design of the system. *Section 8* will conclude the document with a brief review of the document, isolating the key points.

2 Definition of Terms

Throughout the document, certain words will be used frequently when describing the GSMS. The following words are defined precisely in how we intend to use them, and what they refer to when it comes to the GSMS in particular.

- **Gym Space Monitoring System (GSMS):** The official title to refer to the whole system, which includes all devices in each room, along with the software components.

- **Management:** The overall administrative acts used to manage the gym, including member sign-up and tracking, upholding building and fire codes, member safety, as well as managing the traffic and flow of members within the gym.

- **Central Computer:** The primary processing unit of the GSMS is responsible for aggregating data from all sensors, performing analysis, and coordinating alerts and system responses.

- **Maintenance:** Referring to the upkeep of the gym as it relates to gym equipment. This refers to the replacement and fixing of faulty or broken gym equipment, along with hygienic practices such as cleaning all equipment at regular intervals.

- **Identification Scanner:** A scanner which is placed at the entrance of the gym, where members are provided with an ID card upon sign-up and can then scan in and scan out of the gym using simple 2D barcode scanning.

- **Bulky Buzzer:** A special alarm which is placed near the front of the gym, which triggers if people or a particular member is being too loud during their exercise, thus making other members uncomfortable and unsafe.

- **Environmental Hazards:** Refers to both extreme hazards, such as fires and other emergencies that warrant evacuation, and to small hazards such as tripping on misplaced gym equipment.

- **Camera:** An AI-powered camera that uses computer vision techniques to monitor gym activity and identify predefined conditions. These cameras are designed to detect indicators of unsafe behavior (e.g., improper form or potential falls) and estimate occupancy within their field of view, enabling the system

3 Objectives

The gym monitoring system is designed to enhance safety, situational awareness, and operational efficiency within the facility by fulfilling multiple objectives. These objectives represent the intended outcomes of the system and define the key goals necessary for improving member safety, staff responsiveness, and overall gym management.

- **Enhance Real-Time Safety Monitoring and Incident Responsiveness**
  The system will continuously monitor activity throughout the gym to identify potential safety risks and respond in real time. By detecting hazards such as overcrowding, improper equipment use, and possible injuries, the system will enable faster identification and resolution of unsafe conditions before they escalate. This will improve overall member safety while supporting a more responsive and controlled gym environment.

- **Improve Staff Awareness and Response Coordination**
  The system will provide staff with timely alerts and notifications regarding environmental hazards and potential member injuries. By ensuring that relevant information is communicated clearly and without delay, staff will be able to respond more efficiently and effectively to situations as they arise. This will improve response times, coordination, and overall management of the gym floor.

- **Support Data-Driven Equipment Maintenance and Replacement Decisions**
  The system will collect and analyze equipment usage data to support informed decision-making regarding maintenance and replacement. By identifying patterns in equipment utilization, management will be able to determine which machines experience the most wear and require attention. This will help optimize resource allocation, reduce downtime, and ensure that high-demand equipment remains safe and available for members.

4 System Organization

The Gym Space Monitoring System (GSMS) is organized into two levels: facility-level organization and zone-level organization. The system follows a centralized architecture in which data collected from distributed sensors and devices throughout the gym is transmitted to a central computer for processing and coordination. Although the gym exists on a single physical floor, this structure separates system-wide operations from area-specific monitoring. At the facility level, the system coordinates data collection, processing, and alerting across the entire gym. At the zone level, individual areas are monitored based on their specific equipment, risks, and usage patterns. Together, these

levels enable real-time safety monitoring, efficient space utilization, and data-driven decision-making. All system components communicate through the central computer, ensuring consistent data processing and coordinated system responses.

The primary system components discussed in this section are listed below:

- Cameras
- Identification Scanner
- Central Computer
- Manager Computer
- Electronic Machine Sensors
- Thermostat
- Smoke/Fire Alarm
- Bulky Buzzer

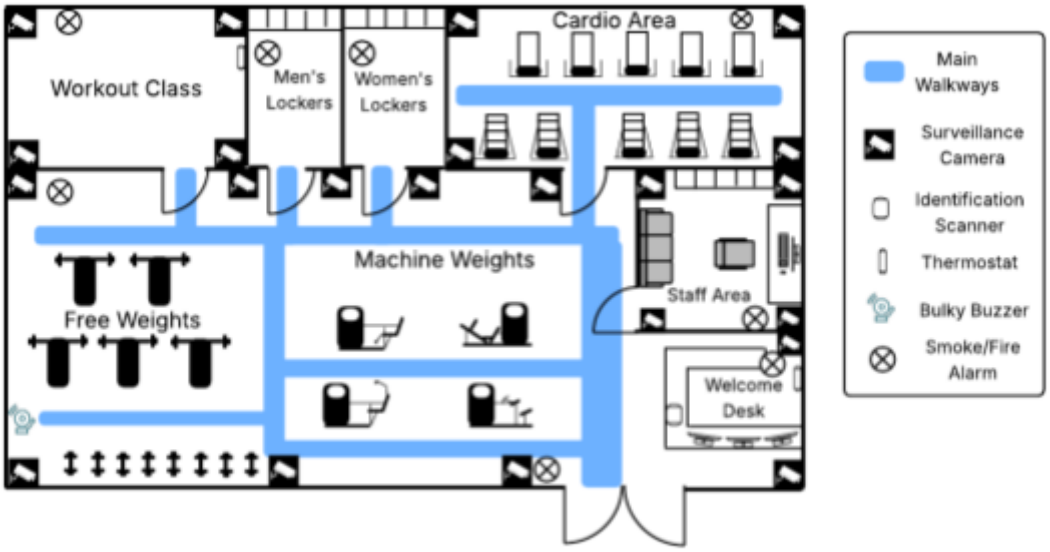

Gym Floor Plan - Figure 1

As shown in Figure 1, the gym is modeled as a unified system composed of multiple interconnected areas, each equipped with monitoring devices. The system is centered around the central computer, located at the welcome desk, which serves as the primary control hub for data processing and alert coordination.

Sensors and devices distributed throughout the facility continuously collect data and transmit it to the central computer for analysis. Based on the data, the system generates real-time alerts, reports, and status updates. These alerts are displayed on the central computer for staff response, while higher-level metrics and critical notifications are forwarded to the Manager Computer for administrative monitoring and decision-making.

4.1 Entry and Primary Monitoring Zones

The entry and primary monitoring zones represent key points of data collection and system interaction within the GSMS.

- **Entrance and Identification**
  At the entrance, members scan into the gym using an identification scanner. This allows the system to track occupancy, entry and exit times, duration of stay, and peak usage periods. The data supports both real-time monitoring and long-term analytics.

- **Main Walkways**
  The main walkways, shown in Figure 1, are high-traffic areas and serve as primary monitoring zones. Cameras placed along these walkways enable the system to detect falls, congestion, and obstructed pathways, supporting safe movement throughout the facility.

- **Centralized Control Center**
  The central computer, located at the welcome desk, serves as the primary interface for staff monitoring. Processed system data and alerts are routed to this computer, allowing staff to respond to incidents in real time. The system also provides access to user-facing features, such as class scheduling and member registration, through the associated website interface.

4.2 Zone-Specific System Integration

At a more detailed level, as shown in Figure 1, the gym is divided into distinct zones, each with specific equipment, risks, and monitoring requirements. Each zone is equipped with sensors and devices selected to support its function and provide relevant data to the system.

- **Machine Weights Area**
  This area contains electronic exercise machines equipped with sensors that track usage status, frequency, and duration. The data allows the system to monitor equipment demand and identify high-usage machines. Cameras in this zone are used to detect falls and overcrowding, while environmental sensors (e.g., smoke/fire alarms and thermostats) monitor for hazardous conditions such as excessive heat.

- **Free Weights Area**
  This zone includes dumbbells, bench press stations, and squat racks, which do not provide direct usage data. As a result, monitoring relies primarily on cameras to detect potential safety concerns such as dropped weights, overcrowding, and unsafe behavior. A bulky buzzer is located nearby and can be triggered when excessive noise levels are detected.

- **Cardio Area**
  The cardio area contains treadmills and stair machines equipped with built-in sensors that track usage frequency and session duration. Cameras are also used in this area to monitor for falls and general safety conditions.

- **Workout Class Room**
  This room is used for group fitness sessions and is monitored using cameras to track occupancy levels and room capacity. The system uses data to detect overcrowding and support safe and efficient use of the space.

4.3 Privacy and Administrative Support

This section describes how the GSMS supports user privacy while enabling administrative monitoring and system oversight.

- **Locker Rooms and Environmental Sensors**
  Locker rooms provide changing and storage space for members and are treated as privacy-sensitive areas. To maintain user privacy, no camera-based monitoring is used in these spaces. Instead, only environmental sensors, such as thermostats and smoke/fire alarms, are deployed. These sensors are also distributed throughout the facility and provide additional input to the system for detecting hazardous conditions. The placement of these sensors is shown in Figure 1.

- **Staff Area**
  The staff area houses the Manager Computer, which supports administrative monitoring and system oversight. This system provides access to aggregated data, including equipment usage trends, occupancy statistics, and incident logs. It also displays high-level alerts and system status information. Staff use this interface to monitor gym conditions and respond to alerts, while managers use it to analyze trends and support operational decision-making.

5 Interfaces

The GSMS operates within a series of interwoven interfaces that achieve the desired communication into and out of the system. In this section, the inputs and outputs of the system will be classified and described. Along with the explanations, *Figure 2* is provided for further clarity.

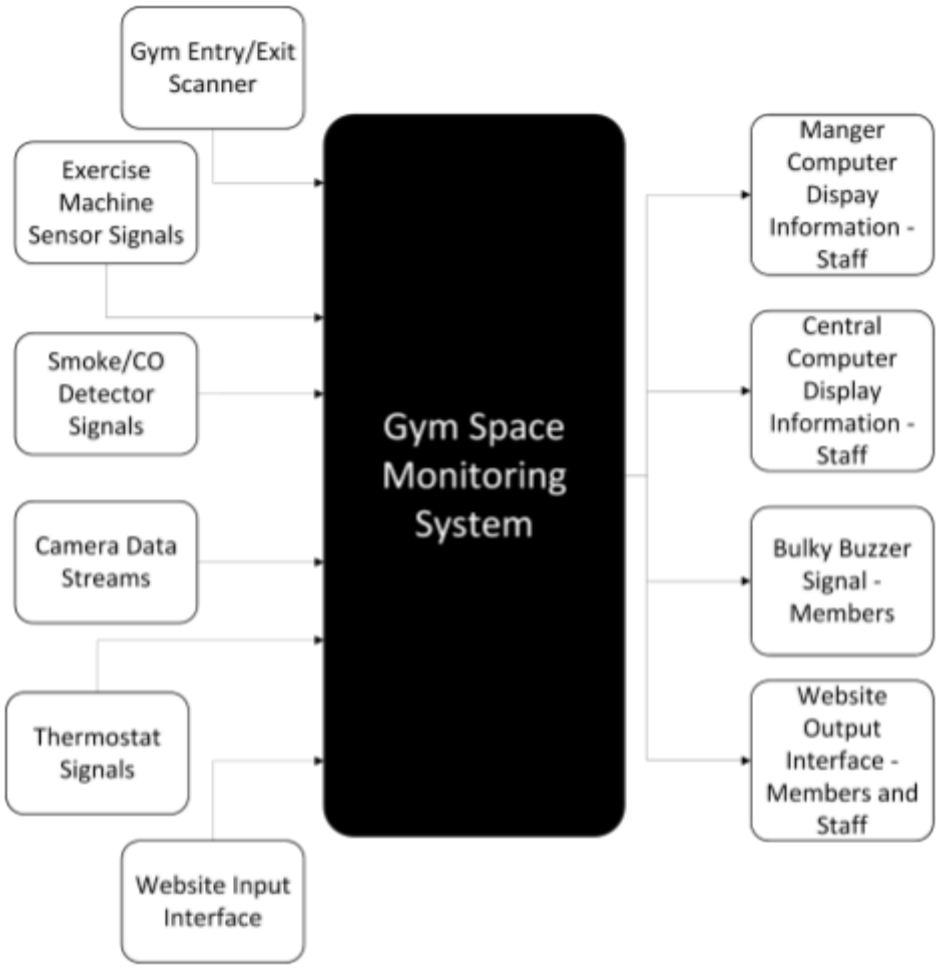

GSMS Black Box Diagram - Figure 2

5.1 System Inputs

The items in this section are the system inputs that feed data into the system for processing or storage, as seen in *Figure 2*.

- **Gym Entry/Exit Scanner Data**
  The system will receive information from an entry/exit scanner. As members enter the gym, they are required to scan into the system; a scanner will scan the member's chosen identification and send the data to the system for monitoring headcount and peak times for business analytics for manager reports.

- **Exercise Machine Sensor Signals**
  The system will receive signals from the workout machines. Each piece of equipment will be equipped with sensors to track on/off status that transmit data to the system

for tracking equipment usage times, so the system can make the appropriate maintenance and replacement recommendations to the manager.

- **Camera Data Streams**
  The system will receive data from multiple cameras placed throughout the gym to monitor the different spaces; their feeds will be used by the system for monitoring occupancy levels, fall detection, fall prevention, and more through AI image and video processing. If an incident is detected, an alert will be triggered by the system for staff to respond to so that the facility meets company and legal safety and regulatory standards.

- **Thermostat Signals**
  The system will be connected to and receive information from thermostats throughout the gym and will monitor temperature levels for excess heat. When excess heat is detected, a signal will be sent to the system to trigger an alert so that staff can respond.

- **Smoke/Carbon Monoxide Detector Signals**
  The system will be connected to and receive information from smoke/carbon monoxide detectors throughout the gym space. When an alert is triggered, it is sent to the system to process and further alert the staff.

- **Web App Input Interface**
  A website will be made available to members to allow for signing up for classes and seeing class schedules, as well as other information. The user input from the website will be sent to the system for schedule tracking and analytics for improved customer experiences.

5.2 System Outputs

The items in this section are system outputs that return the processed or stored data to users, as seen in *Figure 2*.

- **Central Computer Display Information**
  The system will send display information and alerts to a central computer station for staff to monitor and use. Alerts will appear on the display as they are sent by the system so that staff can respond in real time.

- **Manager Computer Display Information**
  The system will send display information, reports, and higher-level alerts to the Manager Computer for the manager to analyze and respond to business needs as they arise.

- **Bulky Buzzer Signal**
  When excess noise is detected in the gym, the system will send a signal to trigger the Bulky Buzzer alarm to alert gym members through a sound and flashing light to keep noise levels moderate.

- **Web App Output Interface**
  The system will transmit data to the website so that customers can see what classes are available and when, and other general information.

6 Capabilities

The capabilities of the gym monitoring system describe the core functions required to achieve the project objectives and ensure effective system operation. These capabilities focus on maintaining the safety, awareness, and efficiency of the gym environment for both members and staff. The system integrates artificial intelligence (AI) through external API calls to support automated visual analysis and enhance real-time decision-making. The following subsections describe each capability in detail.

- **AI-Based Detection and Activity Analysis**
  The system will use artificial intelligence through external API calls to analyze live camera feeds and identify specific safety-related events within the gym environment. These AI-driven capabilities include fall and injury detection, occupancy headcounting, detection of objects blocking walkways, and identification of aggressive behavior between individuals.

  For fall and injury detection, the AI will evaluate body position and motion patterns to identify situations where a member may have collapsed or is in distress. For occupancy monitoring, the AI will estimate the number of individuals present in a given area to help detect overcrowding conditions. For pathway safety, the AI will identify objects or equipment obstructing walkways that may create hazards. For behavioral monitoring, the AI will analyze interactions between individuals to flag potentially aggressive or unsafe behavior.

  The system will rely on external AI API services rather than locally hosted models, allowing it to leverage pretrained computer vision capabilities without requiring on-site model training or maintenance. The outputs of these AI services will serve as inputs to the system's alerting, logging, and dashboard components, enabling automated and near-real-time safety analysis.

- **Real-Time Monitoring and Alerting**
  The system will continuously monitor members while they are using gym equipment and occupying different areas of the facility. By combining live system data with AI-based analysis of camera feeds, the system will identify unusual situations such as potential injuries, unsafe behavior, overcrowding, or obstructed pathways, and generate alerts to notify staff.

  Alerts will be triggered based on detected events and their associated conditions, ensuring that critical situations are communicated in a timely manner. This capability supports rapid response by ensuring that incidents are identified and acted upon as they occur.

- **Environmental Hazard Detection**
  The system will monitor environmental conditions within the gym, including smoke detection and temperature levels. If unsafe conditions are detected, such as temperatures exceeding safe thresholds (e.g., 120°F) or the presence of smoke, the system will trigger alerts to staff and initiate emergency notification procedures.

  This capability enhances overall safety by providing early detection of dangerous environmental conditions independent of AI-based visual analysis.

- **Occupancy and Activity Tracking**
  The system will track member activity through scan-in and scan-out data, allowing it to measure room capacity, length of stay, and peak usage times. The data may be supplemented by AI-based headcount estimates from camera feeds to improve accuracy in occupancy tracking and detect overcrowding conditions.

  By analyzing this information, the system can identify high-traffic areas and "hot spot" times within the gym. This capability supports both safety monitoring and operational planning by providing visibility into how the space is being used.

- **Equipment Usage Monitoring**
  The system will collect usage data from compatible electronic gym equipment to track how long and how frequently machines are used. This information will help identify heavily used equipment, monitor wear over time, and support decisions regarding maintenance or replacement.

  This capability ensures that equipment remains functional, safe, and available for members while supporting efficient resource management.

- **Incident Logging and Reporting**
  The system will log important events such as injury detections, environmental alerts, occupancy levels, obstructed pathways, and aggressive behavior incidents. Events identified through AI analysis will be stored along with relevant metadata such as time, location, and event type.

  The data will be organized to allow for later analysis and reporting. By maintaining a record of incidents and trends, the system supports accountability, continuous improvement, and informed decision-making.

- **Reporting and Management Dashboard**
  The system will provide a website or dashboard that displays collected data, including population statistics, usage trends, and incident reports. Staff and management will be able to monitor active alerts, ongoing conditions, and summarized insights about gym activity and equipment demand.

  The dashboard will also display events generated through AI analysis, providing visibility into detected incidents and system activity. The platform may include additional features such as class sign-ups, improving both operational oversight and user engagement.

- **Emergency Alert Mechanisms**
  The system will include physical and digital alert mechanisms, such as buzzers and on-screen notifications, as part of the system's alerting pipeline. These alerts will activate during emergencies or hazardous conditions to ensure that critical warnings are immediately noticeable.

  This capability reinforces the system's ability to prompt rapid response in time-sensitive situations, including events detected through AI-based analysis.

- **Staff Interaction and Alert Acknowledgment**
  The system will allow staff to acknowledge, respond to, and resolve alerts through the dashboard interface. By providing visibility into the status of active incidents, this capability ensures that situations are actively managed and not overlooked.

  This includes alerts generated from AI-based detections, enabling staff to quickly respond to identified risks such as injuries, unsafe behavior, or environmental hazards. It also supports coordination among staff by tracking responses and maintaining awareness of ongoing conditions.

7 Constraints

The constraints that limit our overall system design primarily stem from equipment interaction limitations, liability concerns, software reliability, and the restricted capabilities of AI-based components. The following sections describe the obstacles and constraints that impact the system design and implementation.

1. **Emergency and Fire Safety**
   The system must comply with all applicable fire and emergency safety regulations [1][2] to ensure it does not interfere with evacuation procedures or emergency response systems. This includes maintaining clear access to exits, avoiding obstruction of main walkways, and ensuring all installed hardware (e.g., security cameras) does not pose a hazard during emergencies.

2. **Injury Liability**
   The system must be designed to minimize the risk of user injury and reduce liability for the facility. This includes ensuring that monitoring features do not distract users during exercise, that any alerts or feedback are non-intrusive, and that collected data is not used in a way that could create an unsafe environment.

3. **Machine Maintenance**
   The system must support routine maintenance of gym equipment by providing accurate usage data and system status updates. It should not hinder access to machines for repair or servicing, and any installed components must be durable and easy to maintain or replace.

4. **Electrical Machine Constraints**
   The system must integrate safely with gym equipment without interfering with electrical operation or exceeding power limitations. Any sensors or monitoring devices must comply with electrical safety standards[2] and must not introduce risks such as short circuits, overheating, or equipment malfunction.

5. **Equipment Interaction Constraints**
   The system must operate as a non-invasive layer on top of existing gym equipment. It must not interfere with the normal operation, mechanical function, or safety mechanisms of any machine. Sensors and monitoring components must be externally attached or observational (e.g., camera-based or proximity-based).

If equipment is detected to be malfunctioning or unsafe (e.g., irregular usage patterns, sensor inconsistencies, or reported faults), the system must flag the machine as unavailable and avoid providing feedback or recommendations for its use.

6. **Environmental Limitations**
   The system must operate reliably in a gym environment that includes temperature variation, humidity, sweat exposure, and frequent physical interaction. All hardware components must be resistant to these conditions, and software must account for potential sensor noise or degradation caused by environmental factors.

7. **Software Reliability**
   The system must remain functional under partial failure conditions, including sensor outages or AI misclassifications. It must degrade in a graceful manner by:
   a) Disabling affected features when data is unreliable
   b) Avoiding propagation of incorrect data across the system
   c) Logging errors for maintenance and review

8. **AI Constraints**
   Because the system relies on AI-based detection, it introduces limitations in accuracy and context awareness. The system must account for:
   - Imperfect detection accuracy: AI predictions may be incorrect due to occlusion, lighting conditions, or user behavior.
   - Limited contextual understanding: The system cannot fully interpret user intent, experience level, or physical condition.
   - Ambiguity in multi-user scenarios: AI may struggle to distinguish between multiple users or overlapping activities.

   To address these limitations, the system must:
   - Imperfect detection accuracy: AI predictions may be incorrect due to occlusion, lighting conditions, or user behavior.
   - Limited contextual understanding: The system cannot fully interpret user intent, experience level, or physical condition.
   - Ambiguity in multi-user scenarios: AI may struggle to distinguish between multiple users or overlapping activities.

8 Conclusion

The GSMS provides a comprehensive solution for improving safety, awareness, and operational efficiency within modern gym environments. By integrating sensors, computer vision technology, and centralized data processing, the system enables continuous monitoring of member activity, environmental conditions, and equipment usage across all areas of the facility.

Through real-time alerts, occupancy tracking, and usage analytics, GSMS enhances the ability of the staff and management to respond quickly to potential safety risks while also supporting informed decision-making regarding space utilization and equipment maintenance. Additionally, the system maintains a balance between safety and user privacy by limiting monitoring in sensitive areas such as locker rooms.

Overall, GSMS transforms traditional gym management into a data-driven and responsive system, creating a safer and more efficient environment for both members and staff.

9 References

[1] *Fire Code*, www.cabq.gov/fire/documents/city-of-albuquerque-fire-code.pdf. Accessed 28 Mar. 2026.

[2] "NEW MEXICO COMMERCIAL BUILDING CODE." *14.7.2 NMAC*, www.srca.nm.gov/parts/title14/14.007.0002.html. Accessed 28 Mar. 2026.

10 Change Log

- **Introduction**
  - Added hours of operation (24-hours), some information about members, the extent of the systems tracking (all pieces of the gym space.)
- **System Organization**
  -
- **Interfaces**
  - Changed the black box diagram to show whether staff or members receive the system output.
  - Added more explicit mention of using AI for Camera Data stream processing for headcounts, fall detection, etc.
  - Switched from a specific mention of a website to a Web App to account for both a phone app and a website since a good web app can act as both.
  - Further explained in the inputs and outputs who receives the output and what the system does with the input.
- **Capabilities**
  - Added equipment interaction, software reliability, and AI constraint sections
  - Modified environmental limitations and emergency and fire safety sections
  - Added a new capability: AI-Based Detection and Safety Analysis to explicitly define AI-driven system functionality
  - Specified core AI tasks, including:
    - Fall and injury detection
    - Occupancy headcounting
    - Obstruction (pathway blockage) detection
    - Aggressive behavior detection
    - Clarified that the system uses external AI API services rather than locally hosted models
  - Described how AI outputs integrate with alerting, logging, and dashboard components
  - Updated Real-Time Monitoring and Alerting to incorporate AI-based event detection
  - Removed Computer Vision-Based Safety Analysis, as it was redundant
  - Enhanced Occupancy and Activity Tracking by including AI-supported headcount estimation
  - Expanded Incident Logging and Reporting to include AI-detected events and associated metadata
  - Updated Reporting and Management Dashboard to reflect visibility of AI-generated insights and alerts
  - Refined wording across sections to emphasize automated, near-real-time analysis and system integration
- **Constraints**
  - Added equipment interaction, software reliability, and AI constraint sections
  - Modified environmental limitations and emergency and fire safety sections