INA228 Overview

On the main power bus PCB and each of the four motor power distribution PCBs, an INA228 sensor is used to measure voltage and current. These measurements are used in the precharge logic of the power system, as well as for detecting electrical faults and determining when to shut down power to the motors. The data is also sent to the dashboard for telemetry.

Datasheet

https://www.ti.com/lit/ds/symlink/ina228.pdf?ts=1761932938428&ref_url=https%253A%252F%252Fwww.ti.com%252Fproduct%252FINA228

STM32 Pinout and Configuration

Signal	Pin	Mode	Function
CONTACTOR	PA0	GPIO_Output	Controls main contactor
MOTOR1	PC0	GPIO_Output	Signal to gate driver #1
MOTOR2	PC1	GPIO_Output	Signal to gate driver #2
MOTOR3	PC2	GPIO_Output	Signal to gate driver #3
MOTOR4	PC3	GPIO_Output	Signal to gate driver #4
I2C1_SCL	PB6	I2C	Clock line
I2C1_SDA	PB7	I2C	Data line
USART_TX	PA2	USART	Transmit data (data logger)
USART_RX	PA3	USART	Receive data (data logger)
CAN1_TX	PA12	CAN	Transmit data
CAN1_RX	PA11	CAN	Receive data

Communication - Baud Rates

- I2C: 400 kbits/s (Fast Mode)
- UART: 115200 bits/s (Python telemetry)
- CAN: 1 Mbps

INA228 I2C Device Addresses (7-bit)

- INA228_BUS: 0x40 (A1=GND, A0=GND)
- INA228_MOTOR1: 0x41 (A1=GND, A0=VCC)
- INA228_MOTOR2: 0x42 (A1=GND, A0=SDA)
- INA228_MOTOR3: 0x43 (A1=GND, A0=SCL)
- INA228_MOTOR4: 0x44 (A1=VCC, A0=GND)

INA228 High-Side Sensing Application

IN–	Analog input	Negative input to the device. For high-side applications, connect to load side of sense resistor. For low-side applications, connect to ground side of sense resistor.
IN+	Analog input	Positive input to the device. For high-side applications, connect to power supply side of sense resistor. For low-side applications, connect to load side of sense resistor.

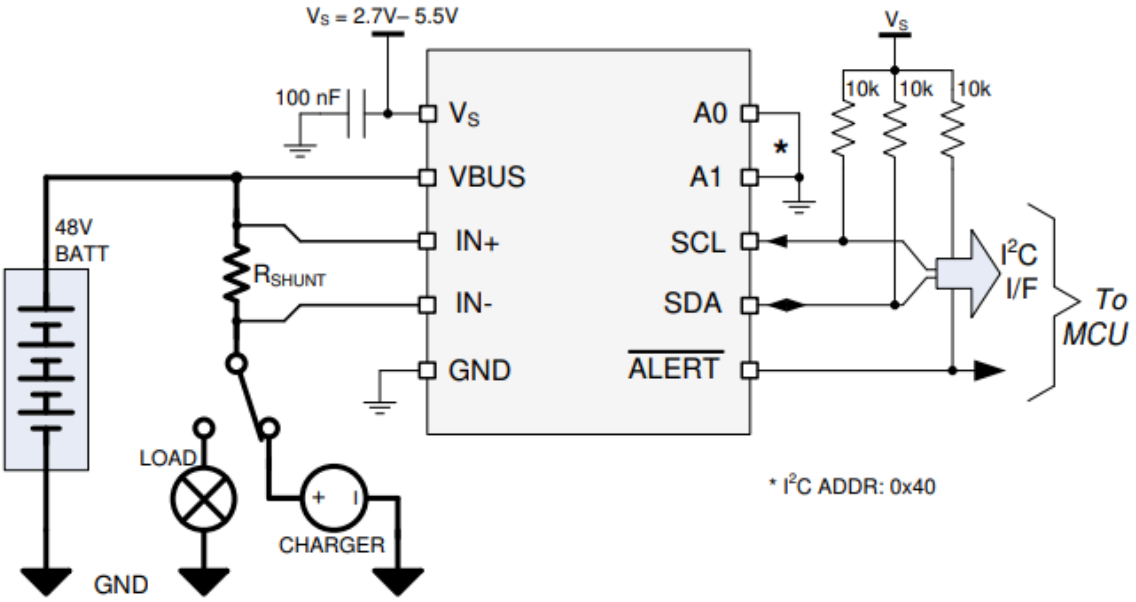

The INA228 uses a 20-bit ADC to measure the small voltage drop across a shunt resistor when current flows through it. Using this measurement and the known resistor value, it calculates the current (I = V/R). It also measures the system bus voltage directly. From the current and voltage, it computes power (P = IV). All values are processed internally before being transmitted to the MCU.

Application Information (Datasheet - section 8.1)

Design Parameter	Motor Value
Power supply voltage (V_s)	3.3 V
Bus supply rail (V_{Bus})	48 V
ADC range selection across IN+ and IN– (V_{Max})	±163.84 mV
Overcurrent fault threshold (I_{Max})	25 A

Shunt Resistor Selection (Motor)

Equation: $R_{Shunt} = V_{Max} / I_{Max}$

Headroom (*10%*): safety margin below full-scale range to handle transients

- Practical maximum: $V_{Max} = 163.84\ mV * 0.90 = 147.456\ mV$

Calculation: $R_{Shunt} = 6\ m\Omega$

Design Parameter	Bus Value
Power supply voltage (V_s)	3.3 V
Bus supply rail (V_{Bus})	48 V
ADC range selection across IN+ and IN– (V_{Max})	±163.84 mV
Overcurrent fault threshold (I_{Max})	50 A

Shunt Resistor Selection (Bus)

Equation: $R_{Shunt} = V_{Max} / I_{Max}$

Headroom (*10%*): safety margin below full-scale range to handle transients

- Practical maximum: $V_{Max} = 163.84\ mV * 0.90 = 147.456\ mV$

Calculation: $R_{Shunt} = 3\ m\Omega$

CAN Communication

DLC = 7 bytes

- Voltage: int16
- Current: int16
- Closed: uint8
- Health: uint8
- Fault: uint8

<u>CAN Frame Format</u>

```
TxData[0] = v & 0xFF;           // Voltage LSB
TxData[1] = (v >> 8) & 0xFF;    // Voltage MSB
TxData[2] = c & 0xFF;           // Current LSB
TxData[3] = (c >> 8) & 0xFF;    // Current MSB
TxData[4] = closed;             // Relay or contactor status
TxData[5] = sensor_status;      // Sensor status
TxData[6] = fault;              // System fault
```

<u>Fault codes</u>

- Normal operation = 0
- Bus overcurrent = 1
- Bus overvoltage = 2
- Bus undervoltage = 3
- Motor overcurrent = 4