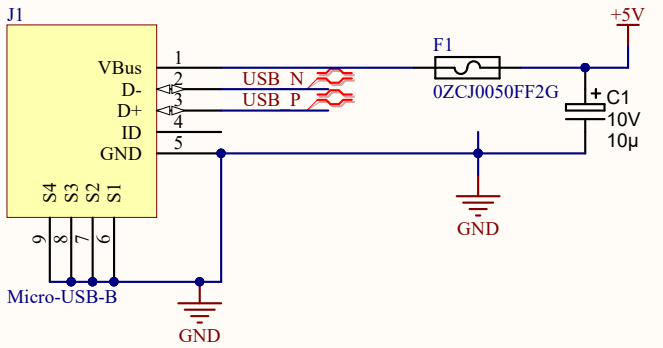

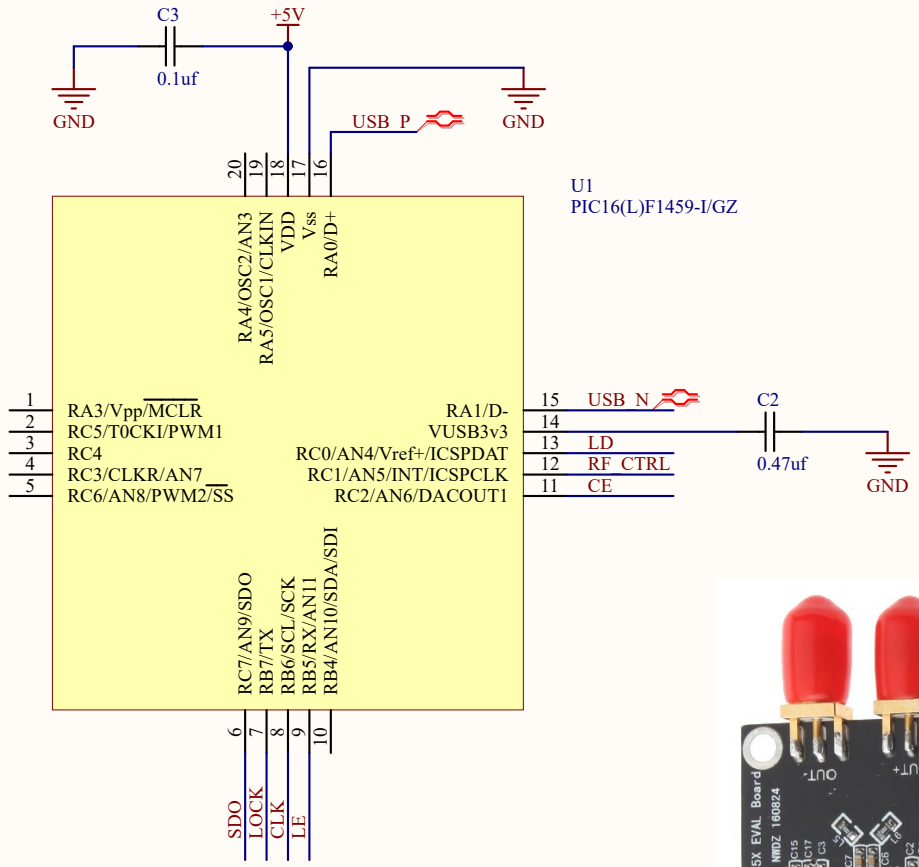

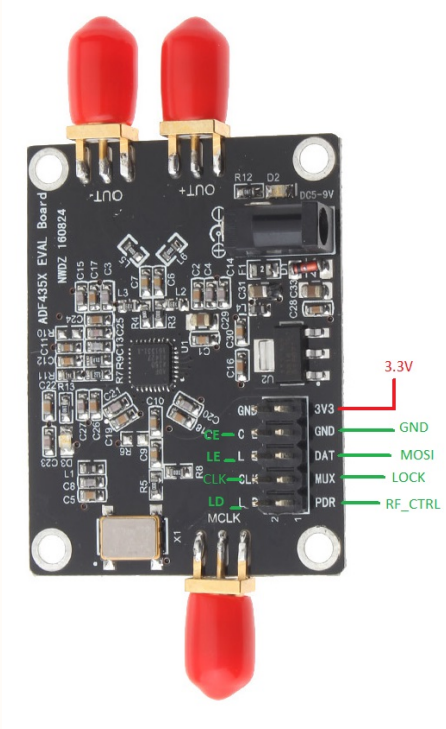

Title	USB IO Board V3 Drawn By : Gaurav Singh , www.CircuitValley.com	
Size A	Number	Revision 3.0
Date: 14-Jul-18		Sheet of
File: C:\Users\..\USB_RF_GEN.SchDoc		Drawn By: