2024 International Wireless Communications and Mobile Computing (IWCMC) | 979-8-3503-6126-1/24/$31.00 ©2024 IEEE | DOI: 10.1109/IWCMC61514.2024.10592581

# Optimizing Efficiency Using a Low-Cost RFID-Based Inventory Management System

Imasha Bandara, Oluyomi Simpson and Yichuang Sun
School of Physics, Engineering and Computer Science
University of Hertfordshire
Hatfield, AL10 9AB, UK
sb19abg@herts.ac.uk, o.simpson@herts.ac.uk and y.sun@herts.ac.uk

***Abstract*—This paper presents the design and evaluation of an RFID-based laboratory equipment tracking system, aimed at enhancing research laboratory inventory management, security, and operations. The process of designing and deploying the RFID infrastructure involves careful selection of RFID components, a microcontroller, and inventory management software. This includes database construction, cloud connection, and graphical user interface development, with a focus on prioritizing real-time data tracking, ensuring data accuracy, and creating user-friendly interfaces. The RFID-based Lab Inventory Management System simplifies laboratory resource management by employing RFID Reader units and tags at specific locations for accurate monitoring. The strategic placement of RFID readers in crucial areas enhances real-time tracking capabilities. Integration with Hostinger connectivity offers an intuitive GUI and centralized database, streamlining operations. The use of resource-efficient RFID tags and reader kits, along with a wide range of hardware solutions, helps reduce costs. Overall, the proposed system's effectiveness lies in its ability to improve laboratory accountability and resource management through real-time tracking, access to historical data, and user-friendly control interfaces.**

***Index Terms*— Data Accessibility, Laboratory Inventory, Radio frequency, Real-Time Visibility, RFID**

## I. INTRODUCTION

In typical far-field radio systems, communication happens between two transceivers equipped with both a transmitter and receiver [1]. They draw power from local sources to drive the transmitted signal, relying on power availability at both ends. These are commonly known as symmetric radio systems [2-4]. Contrastingly, RFID systems redistribute power requirements within the communication network. In such systems, one node, often the active node like an RFID reader, possesses a power source capable of actively transmitting and receiving communication signals.

RFID technology finds extensive application in personnel and object identification as well as access control [5]. A typical RFID system comprises RFID readers, a backend server, and RFID tags, each associated with a distinct user [6]. The RFID reader continuously emits radio signals to detect and interrogate any RFID tag within its operational range. Upon receiving a query from an RFID reader, an RFID tag replies with the stored authentication data, which could be a basic Electronic Product Code (EPC) or an encrypted message. The RFID reader relays this response to the backend server for authentication. A valid response confirms the legitimacy of the RFID tag holder, granting access to restricted areas or systems such as buildings/rooms, computer systems, or research laboratories.

Keeping track of inventories well is essential for scientific progress in today's research laboratories, where things are constantly changing [7]. Traditional inventory methods, which include entering data by hand and doing physical counts regularly, aren't meeting the needs of modern scientific research for accuracy, speed, and scalability. The need for a new way to deal with this problem led to this work: a Laboratory Inventory Management System based on Radio Frequency Identification (RFID) [9]. This paper uses Radio Frequency Identification (RFID) technology to create a model to monitor and manage everything stored in a research laboratory. The laboratory tech can keep track of all the inventories and make notes with this model.

The contributions of the paper can be summarized as follows:

- Design an Efficient Inventory Tracking System Assign and store data to track laboratory equipment.
- Development of novel unique identification system with RFID which can be uniquely identified using an RFID reader (MFRC) and the passive RFID card. Develop a system that allows laboratory staff to track and manage all laboratory inventory using RFID technology efficiently. This includes adding, searching for, issuing, returning, and monitoring inventory items' history in real-time.
- Implement a cloud service for the database for storing comprehensive inventory data securely, ensuring data accessibility from any location with internet access.
- Creating a central database to store inventory data in a structured format. Defining the fields for each table. These fields may include item name, description, category, location, RFID tag ID, and status for inventory items. User information might consist of username, password, and access level. Transaction history fields may include a timestamp, action (issue, return, etc.), and the involved items.
- Develop an intuitive graphical user interface (GUI) that enables laboratory technicians to easily add, search, issue, and return inventory items. The GUI should also facilitate viewing the complete history of any specific inventory item. The work uses Radio Frequency Identification

979-8-3503-6126-1/24/$31.00 ©2024 IEEE

Authorized licensed use limited to: Hochschule Hamm-Lippstadt. Downloaded on April 20,2026 at 07:54:42 UTC from IEEE Xplore. Restrictions apply.

(RFID) technology to create a model to monitor and manage everything stored in a research laboratory. The laboratory tech can keep track of all the inventories and make notes with this model.

In the rest of the paper, Section II describes the System Model channel. In Section III, the proposed hardware implementation is presented. Section IV presents the software implementation of the proposed RFID solution and Section V the whole system integration. Finally, conclusions are drawn in Section VI.

## II. System Model

The proposed system block diagram is shown in Fig.1. Each laboratory equipment has a unique RFID tag. These tags uniquely identify each object, giving accurate identification. Consider that the space is divided into several places. Each laboratory equipment can be found in its specified location. With these locations, the user can adjust the level of accuracy by making the space larger or decreasing it according to the requirements [10]. As shown in Fig.2. One RFID unit is designed to be compact, allowing for easy installation in various locations without occupying much space. The system sends automated alerts for equipment entering or leaving a particular location. Proactive monitoring with a real-time cloud database and a Graphical User Interface prevents equipment loss, theft, and unauthorised movement. Consider placing 6 RFID Readers in Locations A, B, C, and D. One RFID Reader unit is to be considered as the working area. Another RFID Reader unit is to be considered as the laboratory door. Every 30 seconds, the Readers will read the cards, and the database will be updated.

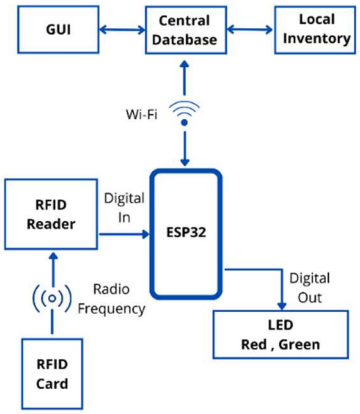


**Fig. 1.** System Block Diagram

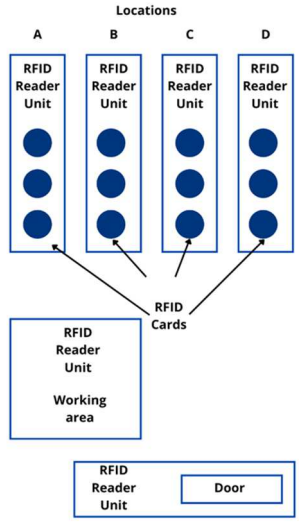


**Fig. 2.** Assign specific locations with the RFID units.

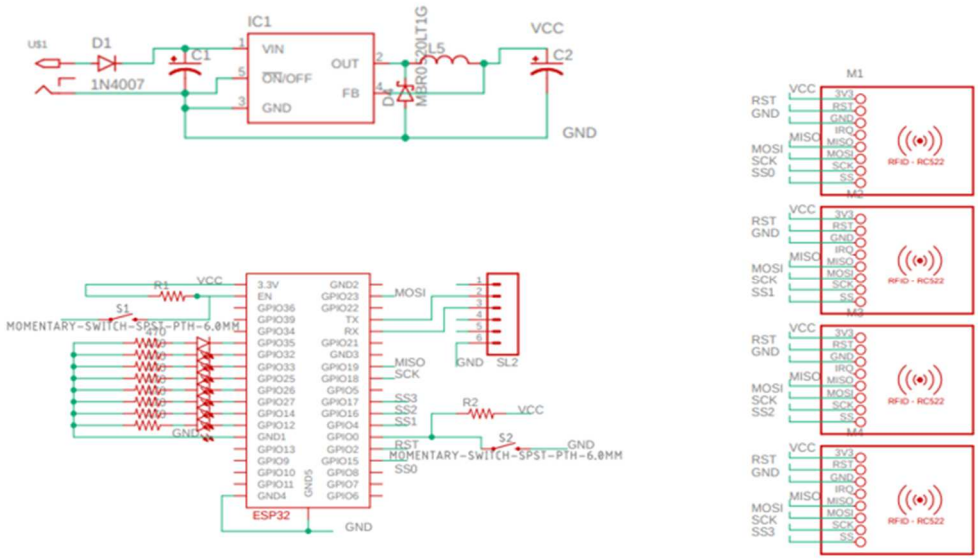


**Fig. 3.** Schematic diagram of the proposed RFID unit.

Authorized licensed use limited to: Hochschule Hamm-Lippstadt. Downloaded on April 20,2026 at 07:54:42 UTC from IEEE Xplore. Restrictions apply.

## III. Hardware Implementation

### A. System design

To make the product, a PCB Design for one unit is designed. The schematic diagram and PCB design of the RFID unit is shown in Fig.3. and Fig, 4, respectively.

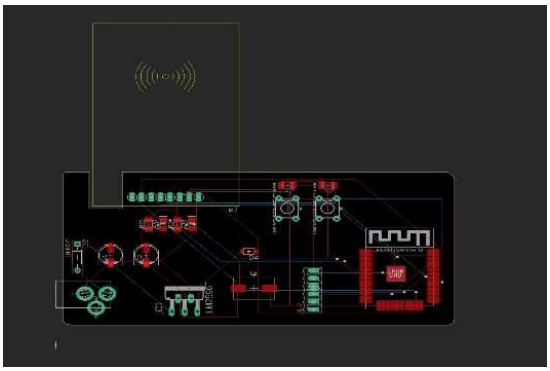

**Fig. 4.** PCB design of the RFID unit

To power up the circuit, a 12V jack is needed. A diode is used for the safety of the circuit. A DC-to-DC transformer has been implemented to decrease the voltage from 12V to 3.3V. RFID reader has a pair of LEDs to indicate the green and red lights. It means the LED will be Green if someone puts the suitable component in the right place. And if someone puts a component in the wrong location, the LED will be red. Resistors were added for each LED to power up. Two switches were added for reset and upload purposes. A summary of the components used is shown in Table I

**Table I**
**Hardware Components**

| |
|---|
| RFID-RC522 |
| ESP32-WROOM-32D |
| 10k Resistor 1206 Size |
| 12V DC Jack |
| 470uf Capacitor |
| 44uh Inductor |
| In5822 Diode |
| -Pin Quick Connector |
| Ft232 USB TTL Converter |
| Push Button. |
| Arduino IDE |

The initial steps are detailed in Fig. 5. The subsequent flowchart depicting the usage of tagged equipment is illustrated in Fig. 6. Similarly, when any tagged equipment is returned, the corresponding flowchart is presented in Fig. 7

### B. System Flow Charts

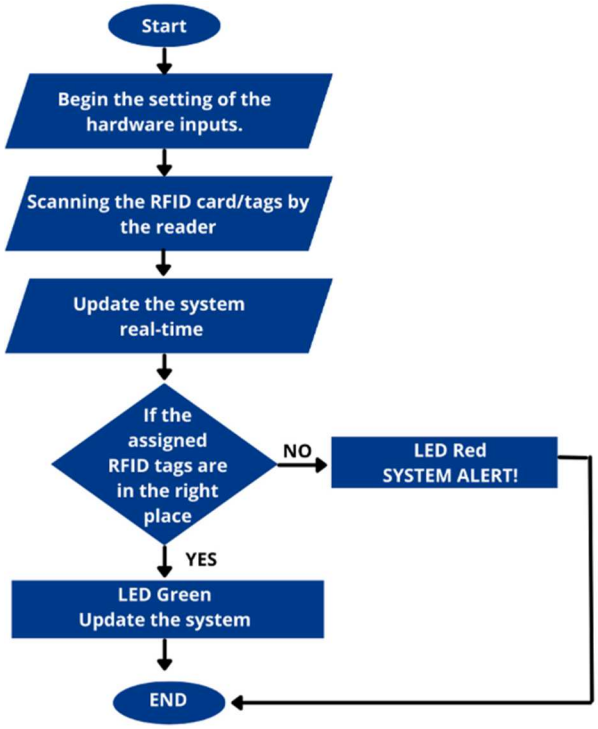


**Fig. 5.** Initial flow chart

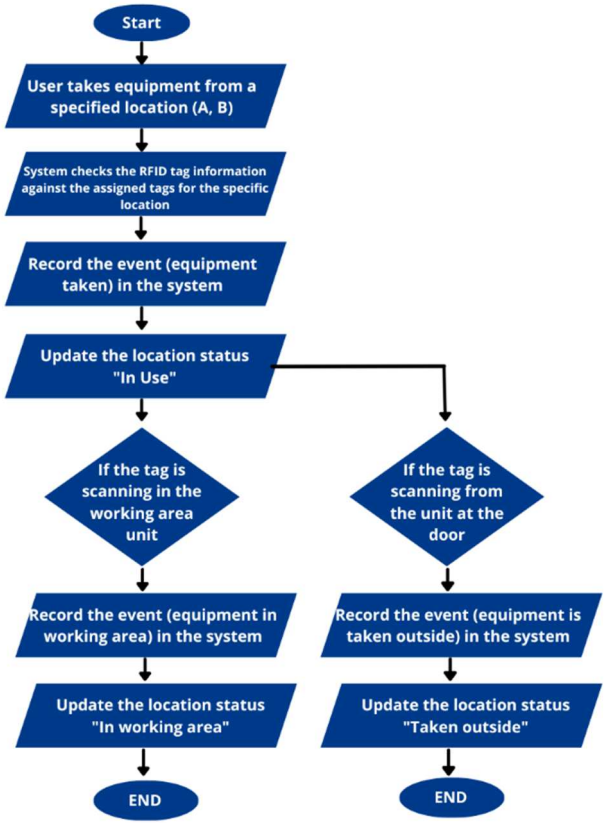


**Fig. 6.** The flowchart that describes when the Tagged equipment is in use

Authorized licensed use limited to: Hochschule Hamm-Lippstadt. Downloaded on April 20,2026 at 07:54:42 UTC from IEEE Xplore. Restrictions apply.

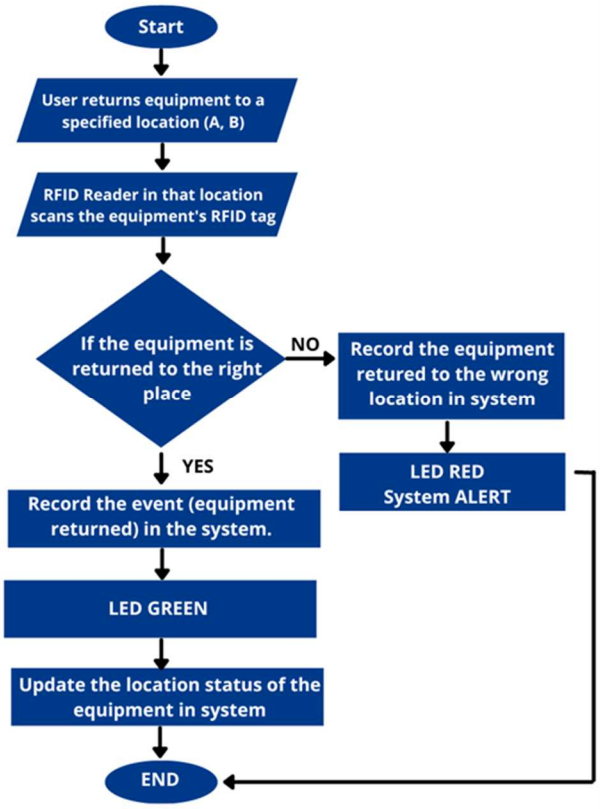


**Fig. 7.** Returning process of tagged equipment

## IV. Software Implementation

### *A. Cloud service: Hostinger Web hosting platform.*

The process involves several key steps to ensure secure and efficient data management. An account must be established on Hostinger, leveraging its user-friendly interface. Once logged in, a dedicated MySQL database must store the comprehensive inventory data. Next, configure the database settings, defining fields such as item name, description, category, location, RFID tag ID, and status. The cloud storage service enables real-time accessibility to inventory information from any location with internet access, fostering collaboration among laboratory technicians. Hostinger's reliability, scalability, and robust security measures contribute significantly to the success of this research, ensuring the integrity and accessibility of critical data [8]. The system is adaptable to various cloud service platforms, and Microsoft Azure and Oracle Cloud Services stand out as robust alternatives to Hostinger web hosting.

### *B. Develop the real-time database.*

Establishing a database on Hostinger using My SQL PhpMyAdmin involves creating tables to organise and store data efficiently. In the context of a Laboratory Inventory Management System using RFID technology, consider dividing a database into several tables based on the data types needed to store, including:

- Inventory Table
- History Table
- User Table
- Configuration Table

### *C. Create a Graphical User Interface*

Using Visual Studio, PHP Framework, Bootstrap, and CSS involves combining the capabilities of these tools to achieve a user-friendly and visually appealing design. Fig.8 shows the login page of the GUI.

**Fig. 8.** Login page of GUI

Utilise Bootstrap's grid system and responsive utility classes to ensure a consistent and user-friendly experience across various devices.

## V. System Connectivity and Integration Of Both Hardware And Software

1. **Establish a connection between the database and the Hardware program (Arduino).**

With the database structure in place, a secure connection between our ESP32-WROOM-32D microcontroller and Hostinger's cloud service must be established, allowing seamless data transmission.

2. **From the database, retrieve the necessary data for the GUI.**

To establish a connection between a MySQL database hosted on Hostinger and three GUIs (Graphical User Interfaces) programmed using Visual Studio with PHP and CSS, in Table II a detailed description of the connection process is presented.

**Table II. Connection Process**

| Steps | Actions |
|---|---|
| *1* | ***Hostinger MySQL Database Setup: created the necessary tables on the Hostinger database.*** |
| *2* | ***PHP Backend Development*** |
| *3* | ***Visual Studio GUI Development*** |
| *4* | ***Integrate PHP with Visual Studio*** |
| *5* | ***Styling with CSS*** |

## VI. Conclusion

In conclusion, the RFID-based Lab Inventory Management System paper represents a significant stride towards efficient and modernised laboratory operations. Carefully consider hardware components, including the ESP32-WROOM-32D microcontroller and RFID tags, to streamline tracking processes while remaining

Authorized licensed use limited to: Hochschule Hamm-Lippstadt. Downloaded on April 20,2026 at 07:54:42 UTC from IEEE Xplore. Restrictions apply.

cost-effective. Notably, the strategic placement of RFID Reader units in designated locations and critical areas like the working space and entrance door establishes a dynamic and responsive tracking network.

The integration of Hostinger's cloud service is a robust foundation for a centralised and accessible database. This, coupled with a customised graphical user interface (GUI), ensures that laboratory technicians can effortlessly manage inventory – from addition and search to issuing and return – while having a comprehensive history of each item at their fingertips.

Using RFID Tags and Reader kits instead of individual components demonstrates a pragmatic and budget-conscious approach, further optimising resources.

The work aligns with its objectives through meticulous testing, debugging, creating an efficient inventory tracking system, implementing RFID technology for unique identification, developing a structured database, integrating cloud services, and making an intuitive GUI. The successful implementation marks a pivotal advancement in laboratory resource management, offering real-time monitoring, historical tracking, and user-friendly control.

## REFERENCES


[1] Y. Abdulkadir, O Simpson, and Y Sun, "Interference Alignment for Cognitive Radio Communications and Networks: A Survey" Journal of Sensor and Actuator Networks 8, no. 4: 50. https://doi.org/10.3390/jsan8040050.

[2] O. Simpson and Y. Sun, "Robust Statistics Evidence Based Secure Cooperative Spectrum Sensing for Cognitive Radio Networks," 2020 International Wireless Communications and Mobile Computing (IWCMC), Limassol, Cyprus, 2020, pp. 1733-1739, doi: 10.1109/IWCMC48107.2020.9148381.

[3] O. Simpson and Y. Sun, "Efficient evidence-based decision fusion scheme for cooperative spectrum sensing in cognitive radio networks", Trans Emerging Tel Tech. 2020; 31:e3901. https://doi.org/10.1002/ett.3901.

[4] M. Cheikh, O. Simpson and Y. Sun, "Energy Efficient Relay Selection Method for Clustered Wireless Sensor Network," European Wireless 2017; 23th European Wireless Conference, Dresden, Germany, 2017, pp. 1-6.

[5] A. Li, J. Li, Y. Zhang, D. Han, T. Li and Y. Zhang, "Secure UHF RFID Authentication With Smart Devices," in IEEE Transactions on Wireless Communications, vol. 22, no. 7, pp. 4520-4533, July 2023, doi: 10.1109/TWC.2022.3226753.

[6] A. Agarwal, G. Babu, L. Rishi, K. Shruthi and V. Agarwal, "RFID management for tracking and inventory," *2011 Second Asian Himalayas International Conference on Internet (AH-ICI)*, Kathmundu, Nepal, 2011, pp. 1-3, doi: 10.1109/AHICI.2011.6113935.

[7] G. A. Kumbhakarna and R. P. Chaudhari, "RFID basedlab inventory management system," *2017 International Conference on Information, Communication, Instrumentation and Control (ICICIC)*, Indore, India, 2017, pp. 1-3, doi: 10.1109/ICOMICON.2017.8279154.

[8] Parameters and Limits of Hosting Plans | Hostinger Help Center, *support.hostinger.com*. https://support.hostinger.com/en/articles/6976044-parameters-and-limits-of-hosting-plans

[9] M. K. Hasan, M. Junjie, A. K. M. Ahasan Habib, A. Al Mamun, T. M. Ghazal and R. A. Saeed, "IoT-Based Warehouse Management System," *2022 International Conference on Cyber Resilience (ICCR)*, Dubai, United Arab Emirates, 2022, pp. 1-6, doi: 10.1109/ICCR56254.2022.9995768.

[10] H. Hazura, B. Mardiana, S. Fauziyah, M. Zahariah, A. R. Hanim and Z. Siti Normi, "RFID Based Laboratory Management System," *2009 International Conference on Computer Technology and Development*, Kota Kinabalu, Malaysia, 2009, pp. 289-291, doi: 10.1109/ICCTD.2009.176.


Authorized licensed use limited to: Hochschule Hamm-Lippstadt. Downloaded on April 20,2026 at 07:54:42 UTC from IEEE Xplore. Restrictions apply.