Bangladesh University Of Engineering and Technology

Rewinding of a 3-Phase 4-Pole Squirrel Cage Induction Motor

Course No. : EEE 206
Course Title : Energy Conversion Laboratory

Presented By:
Student ID: 2006072-2006078
Group : 2
Section : B (B_1)
Level-2, Term-2

OUTLINE

- Nameplate and Motor Specifications
- Theoretical Calculations
- Winding Diagram
- Disassembling the Motor Parts
- Wire Specification
- Assembling & Rewinding
- Testing
- Timeline of Project Implementation
- Bill of Materials
- Outcome of the Project

Nameplate and Motor Specifications

Type	: Y2-90S-4
Power	: 1 HP
Connection	: Y
Rated Voltage	: 380/440 V
Rated Current	: 1.75 A
Rated Speed	: 1390 rpm
Frequency	: 50Hz
Insulation Class	: F

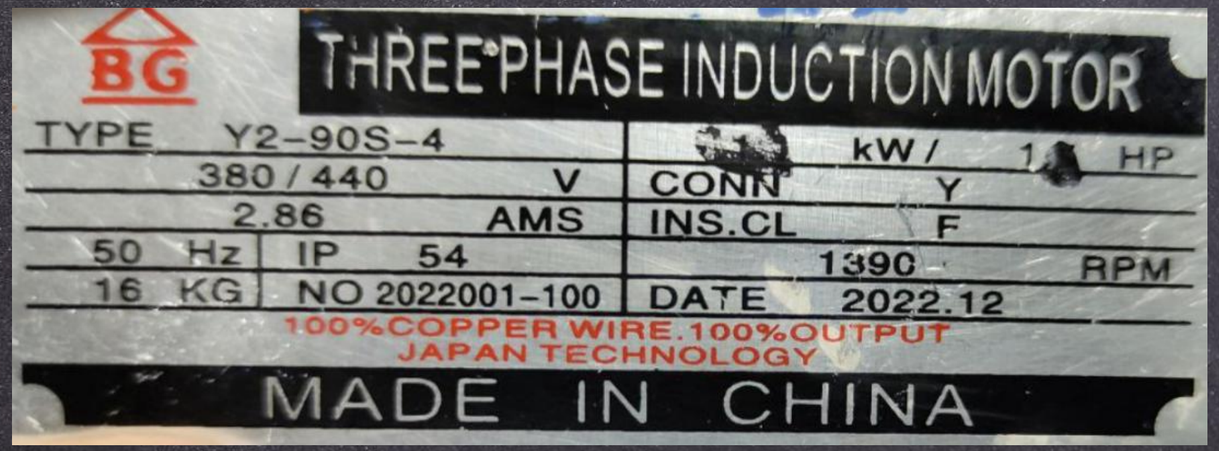

Figure: Nameplate

Theoretical Calculations

Rated Current:

The power required from the re-rated motor, P = 300 Watt
Rated power per phase, P_ϕ = 100 Watt
Rated Line Volatge, V_{Rated} = 415 V

Now,

$$P_\phi = V_\phi I_{Rated} \cos\theta$$

So,

$$I_{Rated} = \frac{100}{\frac{415}{\sqrt{3}} \times 0.6} = 0.7A$$ [Assuming a power factor of 0.6 (lagging)]

The rated current of the rewound motor would be approximately 0.7 amperes

Turns per coil:

Phase Voltage, $V_\phi = \sqrt{2}\,\pi \times f \times \Phi_{\text{per pole}} \times K_w \times N_c \times N_{\text{coil per phase}}$

Here,

Winding factor, $K_w = K_d \times K_p = \frac{\sin(\frac{nY}{2})}{n\sin(\frac{Y}{2})} \times \sin(\frac{\rho}{2}) = \frac{\sin(\frac{2\times 30}{2})}{2\times \sin(\frac{30}{2})} \times \sin(\frac{150}{2}) = 0.9330$

Where ,

Slots per pole per phase ,$n = \frac{Slot}{Phase \times Pole} = \frac{24}{3\times 4} = 2$

Electrical angle per slot, $Y = \frac{360}{S} \times \frac{P}{2} = \frac{360}{24} \times \frac{4}{2} = 30°$

Pitch of stator winding= 5/6 [For minimum harmonic distortions]

Coil pitch in electrical degrees, $\rho = \frac{5}{6} \times 180^o = 150^o$

Flux per pole, $\Phi_{\text{per pole}} = \frac{B\times 2\pi RL}{4} = \frac{1}{4}\times 0.4\times 2\pi\times 3\times 5.5\times 10^{-4}$ Wb

$= 1.0367256\times 10^{-3}$ Wb

Where,

Core Radius, R=6/2=3 cm

Core Length, L=5.5 cm

And, Average magnetic field density, B=0.4 T

Average flux in air gap per unit area, B=0.4-0.6T for 50Hz machines.[1]

Number of coils per phase, $N_{\text{coil per phase}} = \frac{Number\ of\ coil}{Number\ of\ phase} = \frac{12}{3} = 4$

So,

$$N_c = \frac{\frac{415}{\sqrt{3}}}{\sqrt{2}\,\pi\times 50\times 1.0367256\times 10^{-3}\times 0.9330\times 4} = 278.77$$

So, the number of turns per coil is approximately 280.

SWG wire gauge measured from wire diameter:

Here,

Rated current of the motor before rewinding,

$$I_{rated,1} = \frac{746/3}{\frac{415}{\sqrt{3}} \times 0.7}$$ [Letting pf to be 0.7(lagging)]

So,

Stator Current density, $J = \frac{I}{A} = \frac{\frac{746/3}{\frac{415}{\sqrt{3}} \times 0.7}}{0.203} = 7.3\ A/mm^2$

Considering the motor after rewinding:

Cross Sectional Area of the wire to be used is, $A = \frac{I}{J} = \frac{0.7}{7.3} = 0.095843\ mm^2$

According to the SWG chart, it's evident that this corresponds to approximately SWG 29 copper wire.[2]

Winding Diagram

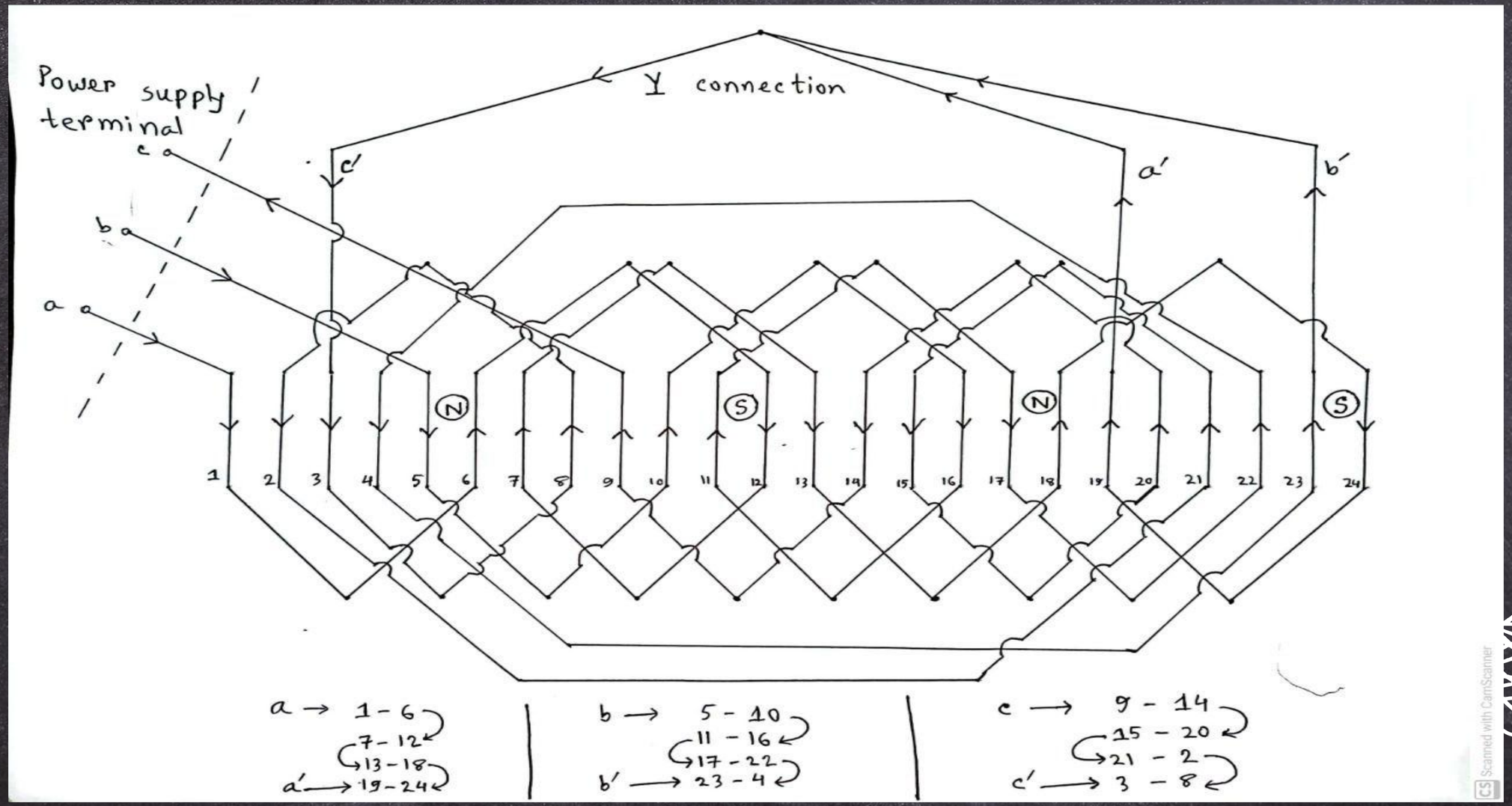

Winding Diagram

Phase-A

Slot No. for Each Coil	Direction of Current Flow
1 - 6	+
7 - 12	-
13 - 18	+
19 - 24	-

Phase B

Slot No. for Each Coil	Direction of Current Flow
5 - 10	+
11 - 16	-
17 - 22	+
23 - 4	-

Phase C:

Slot No. for Each Coil	Direction of Current Flow
9 - 14	+
15 - 20	-
21 - 2	+
3 - 8	-

Steps for rewinding the Induction motor

1. Disassembling-

- Removing covers
- Removing old coils
- Removing old insulation papers

2. Assembling-

- Inserting new insulating papers
- Making new coils
- Inserting new coils
- Wiring the stator

3. Testing-

- No load test
- Locked rotor test
- DC test

Disassembling

- We wiped off our work surface with a lint free cloth.
- Then we remove the motor’s outer housing.
- We cut the old windings free using a hammer and a screwdriver.

Figure: Motor Disassembling

Disassembling

- Then we pulled the cut coils free of the armature or stator by hand.
- We then pulled out the old insulations out of the slots from the stator using a pair of pliers or tweezers.

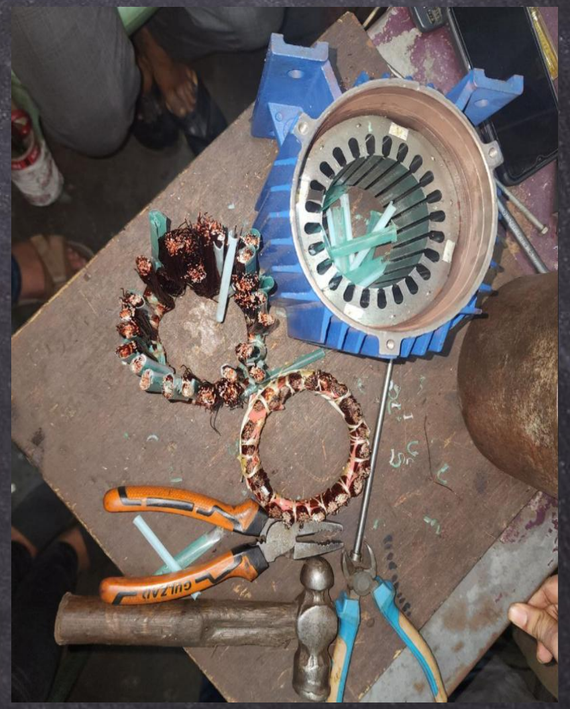

Figure: Motor Disassembling

Removal of Old Windings

- Removal of covers
- Removal of old coils
- Removal of insulation papers
- Weignting of old winding
- Calculating turn number of old coil

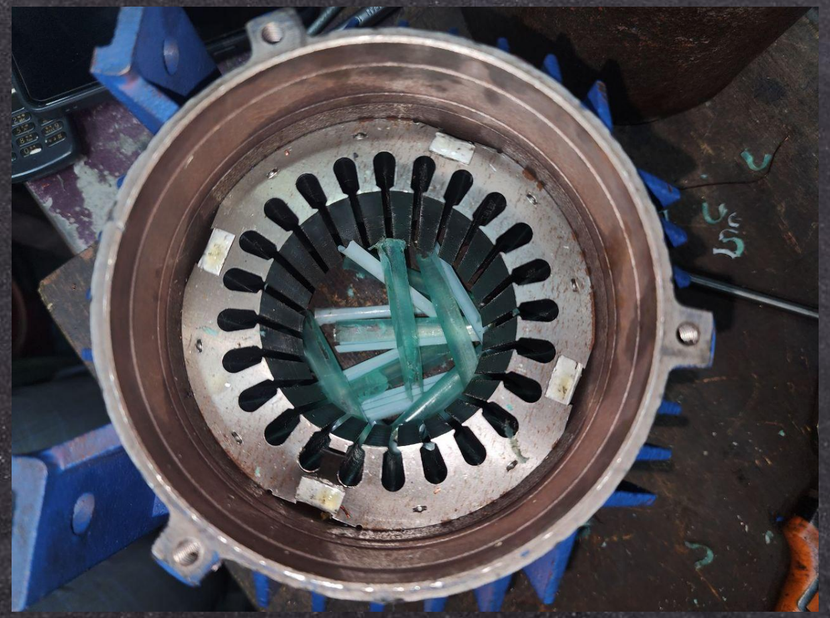

Wire Specification

Parameters	Previous	New
Turns	105	280
SWG	25	29
Weight	831 gram	972 gram
Wire Cross Sectional Area mm^2	0.203	0.0937
Current Rating (Maximum) Ampere	1.75	0.7

Reassembling

- We measured the width of the slots and cut a sheet of insulation paper into strips of the same width, folded the strips gently and slip them into the slots in the stator individually by hand.
- Making new Coils using the calculated gauge of wire.

Figure : Forming Coils using a forma

Reassembling

- Forming new Coils using the calculated gauge of wire.

Figure : Forming Coils using a forma

Reassembling

- Then we insert new insulation paper.

Figure: Inserting new insulation paper

Reassembling

- Then we insert new insulation paper.

Figure: Inserting new insulation paper

Reassembling

- Then, we reinserted those winded coils into the stator.. Replaced the end-plates on either side of the unit and tightened those screws until they were secured.

Figure: Coil Insertion

Reassembling

- Then, we reinserted those winded coils into the stator.. Replaced the end-plates on either side of the unit and tightened those screws until they were secured.

Figure: Coil Insertion

Reassembling

- Then, we reinserted insulating paper into the stator.

Figure: Inserting insulating paper

Reassembling

- Then, we reinserted insulating paper into the stator.

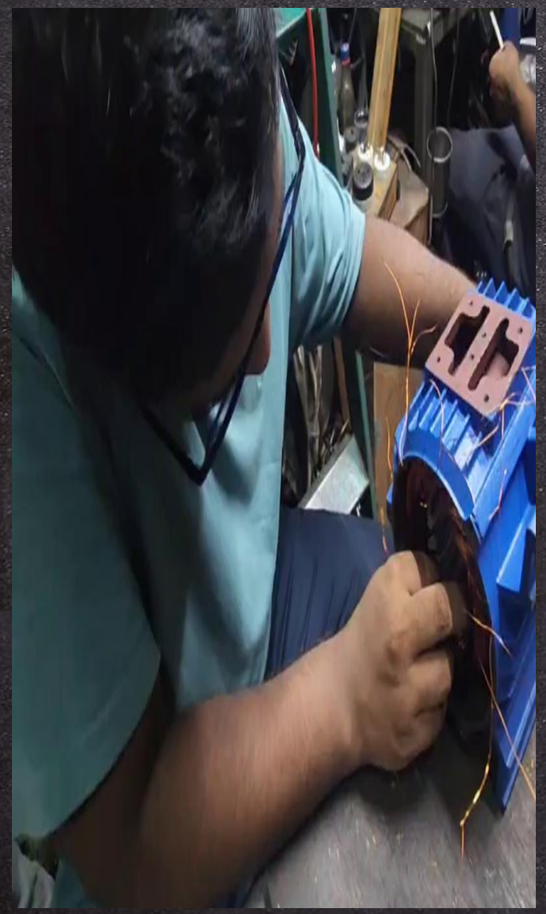

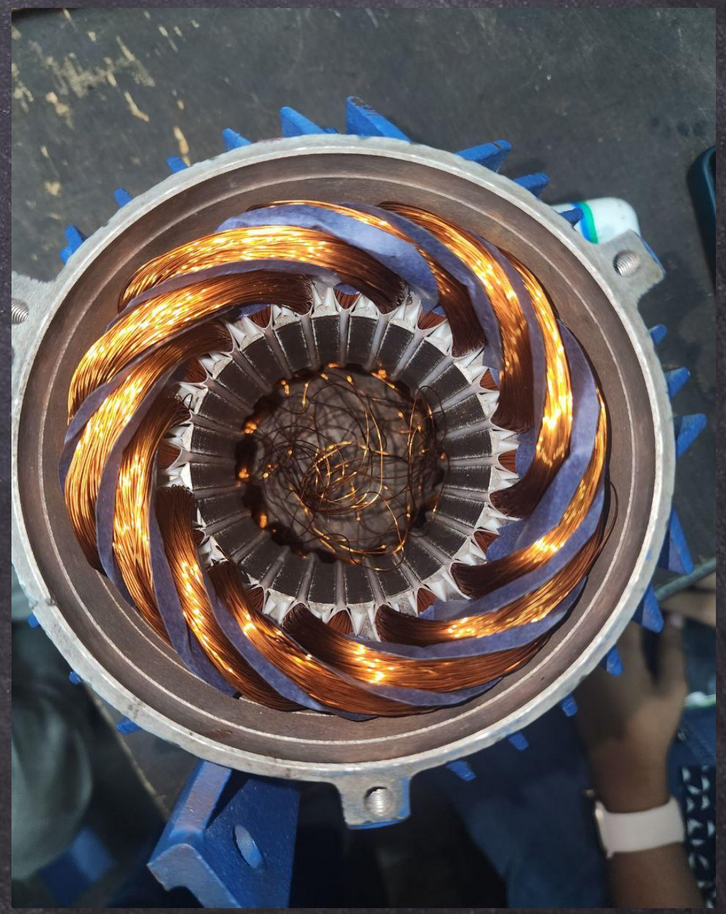

Figure: Inserting insulating paper

Reassembling

- Separating extensions of the coils
- Soldering the coil terminals

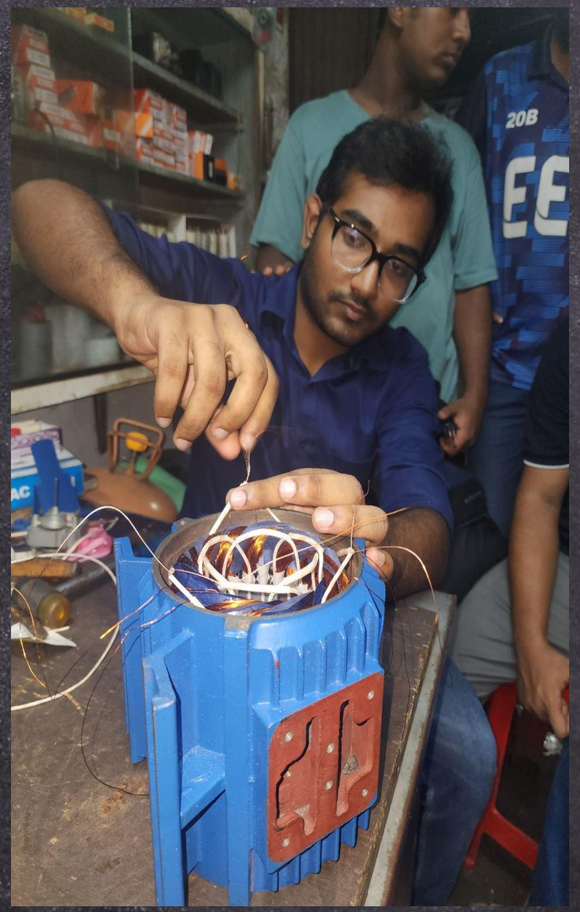

Figure : Binding coils and connection setup

Reassembling

- Separating extensions of the coils
- Soldering the coil terminals

Figure : Binding coils and connection setup

Reassembling

- Bringing out power supply terminals
- Applying Varnish

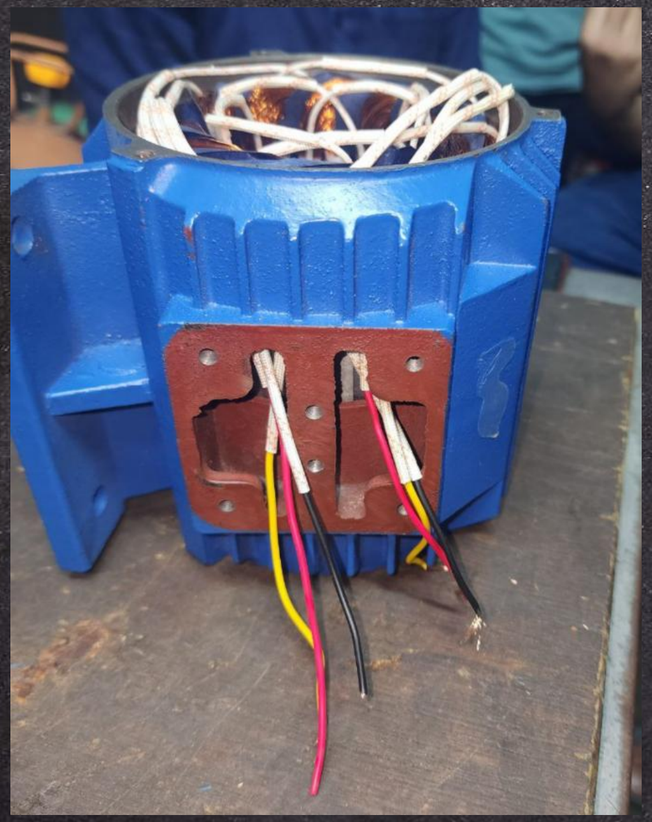

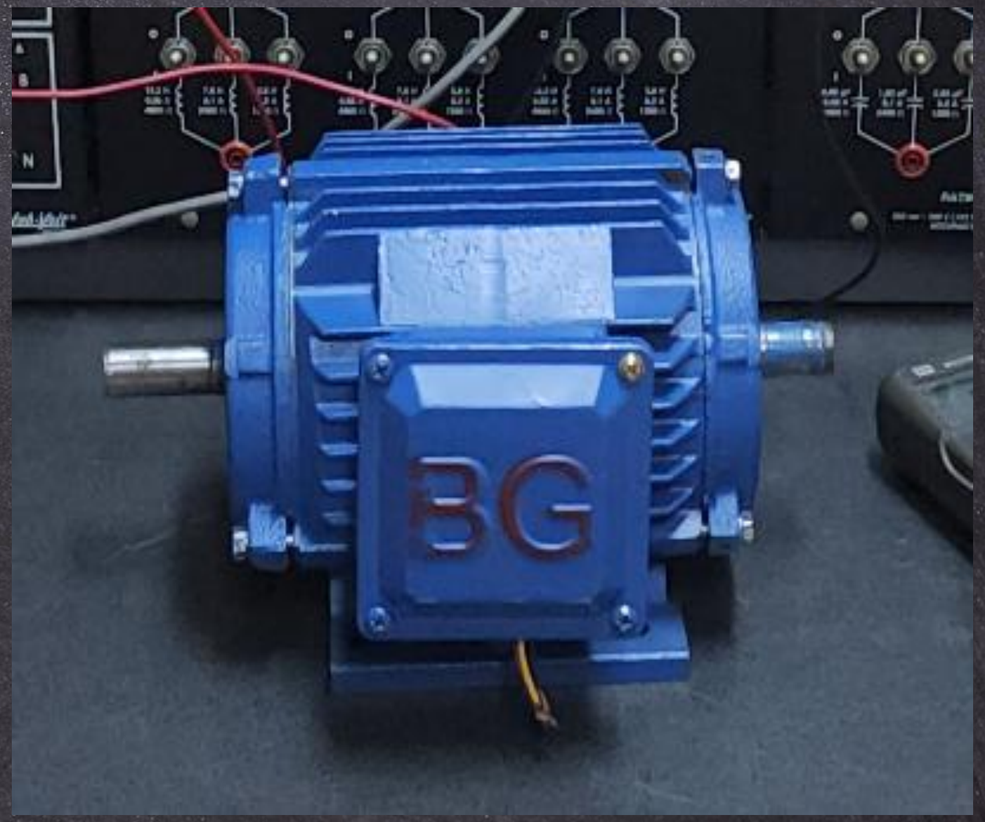

Figure : Final Condition of stator

Testing Procedure

1. The No Load Test

an indirect method used for determining the efficiency and also to determine the circuit parameters of the equivalent circuit of the three-phase induction motors.
In this method, the motor is uncoupled from its load and the rated voltage at the rated frequency is applied to the stator to run the motor without the load.

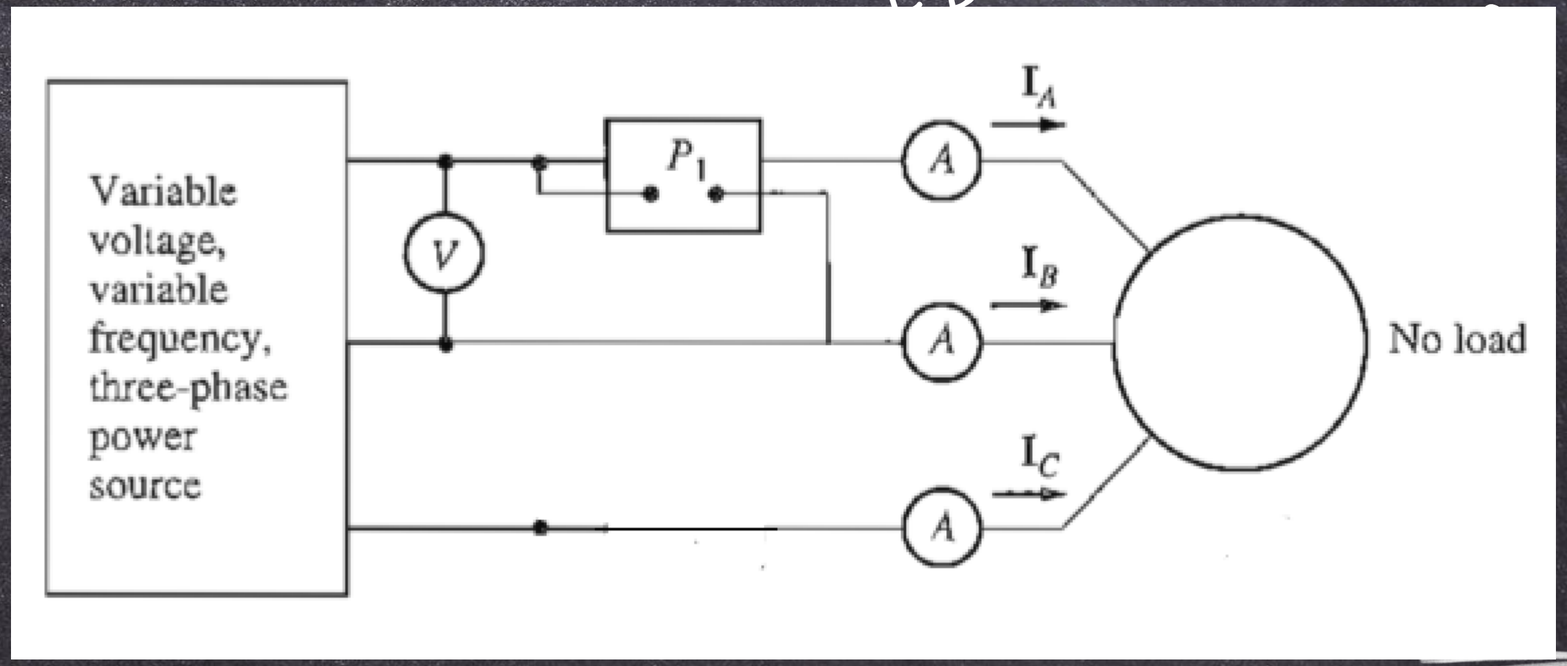

Figure: No load Test

During the no-load test on the induction motor, we assessed its rotational losses and gained valuable insights into its magnetization current. Throughout this test, we applied the rated voltage and meticulously measured both the current and power loss.

With the help of one wattmeter. the input power of the motor is measured.

Test Data:

Line Voltage	360V
Line Current	0.21A
Power	36W

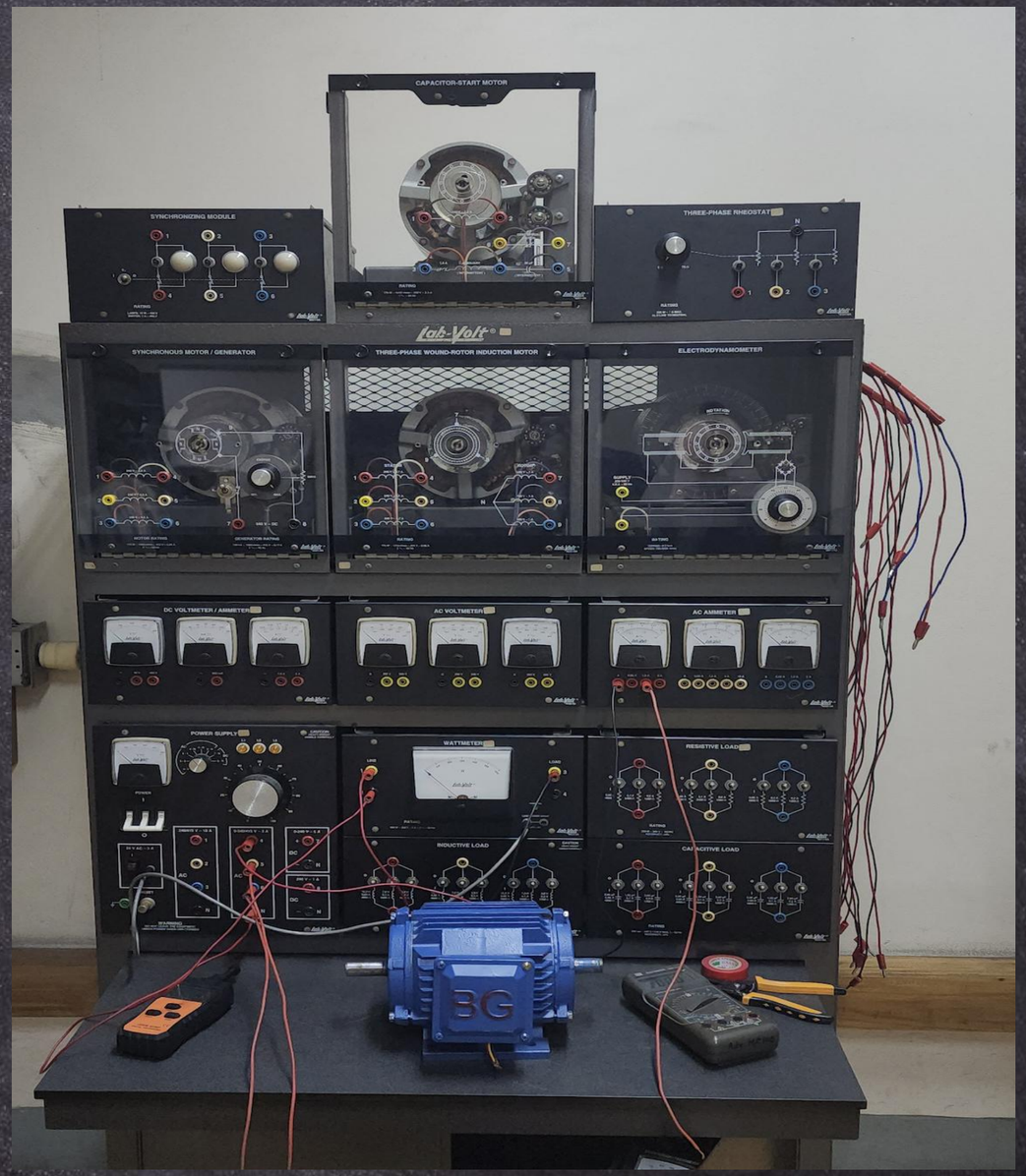

Figure: No-load testing conducted in the advanced machine lab

Calculations:

From DC test:

Stator resistance in 2 coils, $2R_1 = R_{avg} = 154.13\ \Omega$

So,

Stator resistance, $R_1 = 77.065\ \Omega$

From no-load test:

The equivalent input impedance, $|Z_{eq}| = \frac{V(line)}{\sqrt{3}I(no\ load\ line\ current)} = \frac{360}{\sqrt{3}*0.21}$

So,

$|Z_{eq}| = X_M + X_1 = 989.75\ \Omega$

Where,

X_M=Magnetizing reactance

X_1=Reactance of the stator winding

DC Test:

For the DC Test, we opted to use a multimeter to determine the resistance instead of employing a dedicated DC source.

Test Data using multimeter:

R_{ab}	**153.9 Ω**
R_{bc}	154 Ω
R_{ac}	154.5 Ω
R_{avg}	154.13 Ω

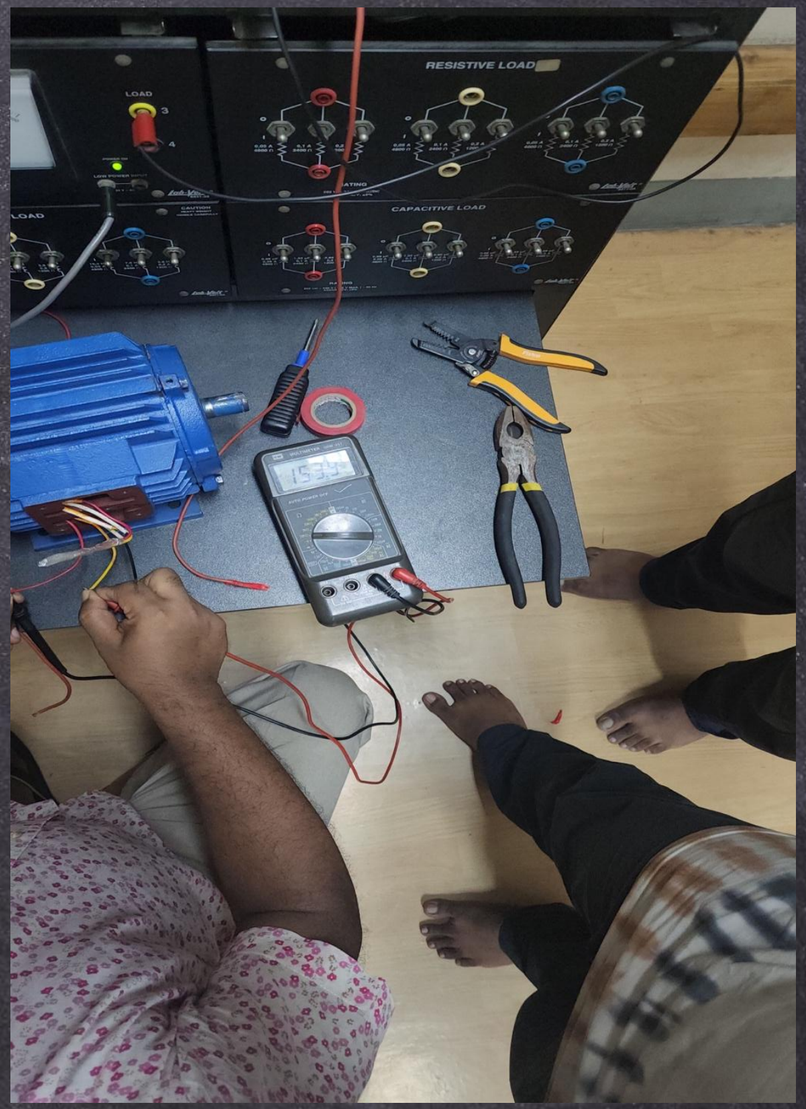

Figure: DC testing conducted in the advanced machine lab(with multimeter)

2. Blocked Rotor Test:

In the Blocked Rotor Test, we applied current and measured the voltage and power. During this test, the rotor was mechanically locked or blocked using a wrench to prevent any movement.

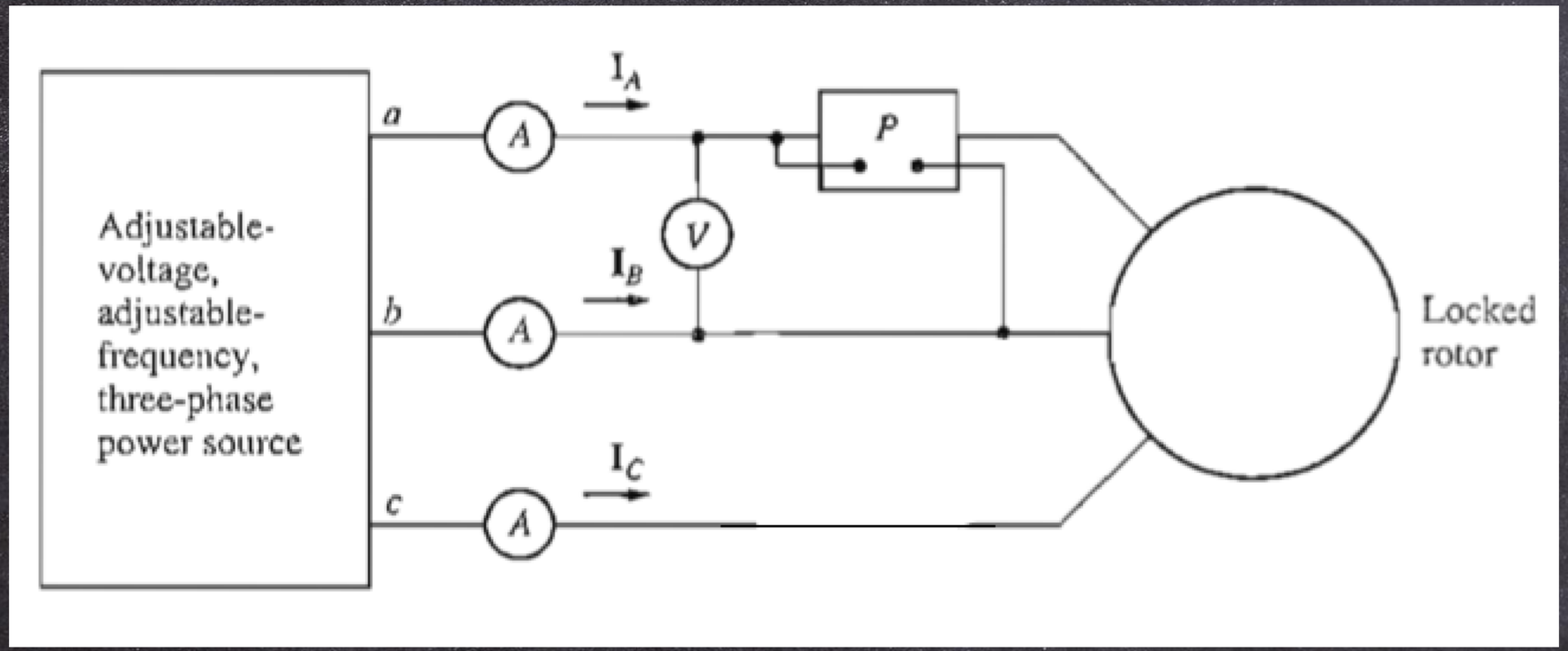

Figure: Blocked Rotor Test

Test Data:

Line Current	**0.7A**
Terminal Voltage	200V
Power	150W
Frequency	50Hz

Figure: Locked-rotor testing conducted in the advanced machine lab

Calculations:

From DC test:

Stator resistance in 2 coils, $2R_1 = R_{avg} = 154.13\ \Omega$

So,

Stator resistance, $R_1 = 77.065\ \Omega$

From no-load test:

The equivalent input impedance, $|Z_{eq}| = \frac{V(line)}{\sqrt{3}I(no\ load\ line\ current)} = \frac{360}{\sqrt{3}*0.21}$

So,

$|Z_{eq}| = X_M + X_1 = 989.75\ \Omega$

Where,

X_M=Magnetizing reactance

X_1=Reactance of the stator winding

✿ From Blocked rotor test:

$$|\mathbf{Z}_{\textbf{locked-rotor}}| = \frac{V(line)}{\sqrt{3}I(line)} = \frac{200}{\sqrt{3}\times 0.7} = 164.96\ \Omega$$

And the impedance angle θ is-

$$\theta = \cos^{-1}\left(\frac{P(in)}{\sqrt{3}V(line)I(line)}\right) = \cos^{-1}\left(\frac{150}{\sqrt{3}\times 200\times 0.7}\right) = 51.79^{o}$$

So,

Locked rotor resistance, $R_{LR} = R_1 + R_2 = |Z_{locked\text{-}rotor}| \times \cos\theta$

$$\Rightarrow R_1 + R_2 = 102.04\ \Omega$$

$$\Rightarrow R_2 = 24.98\ \Omega \quad (\text{Since, } R_1 = 77.065\ \Omega)$$

And, Locked rotor reactance, $X_{LR}' = X_{LR} = |\mathbf{Z}_{\textbf{locked-rotor}}| \times \sin\theta$

$$\Rightarrow X_{LR} = X_1 + X_2 = 129.62\ \Omega$$

Assuming the motor to be of **design class B** induction motor,

$$X_1 = 0.4\ X_{LR} = 51.85\ \Omega$$

$$\text{And, } X_2 = 0.6\ X_{LR} = 77.77\ \Omega$$

Now,

From no load test, $X_M + X_1 = 989.75\ \Omega$

That means, $X_M = 937.89\ \Omega$

Equivalent Circuit Parameters:

CIRCUIT PARAMETERS	
R_1	77.065 Ω
R_2	24.98 Ω
X_1	51.85 Ω
X_2	77.77 Ω
X_M	937.89 Ω

Equivalent Circuit Schematic:

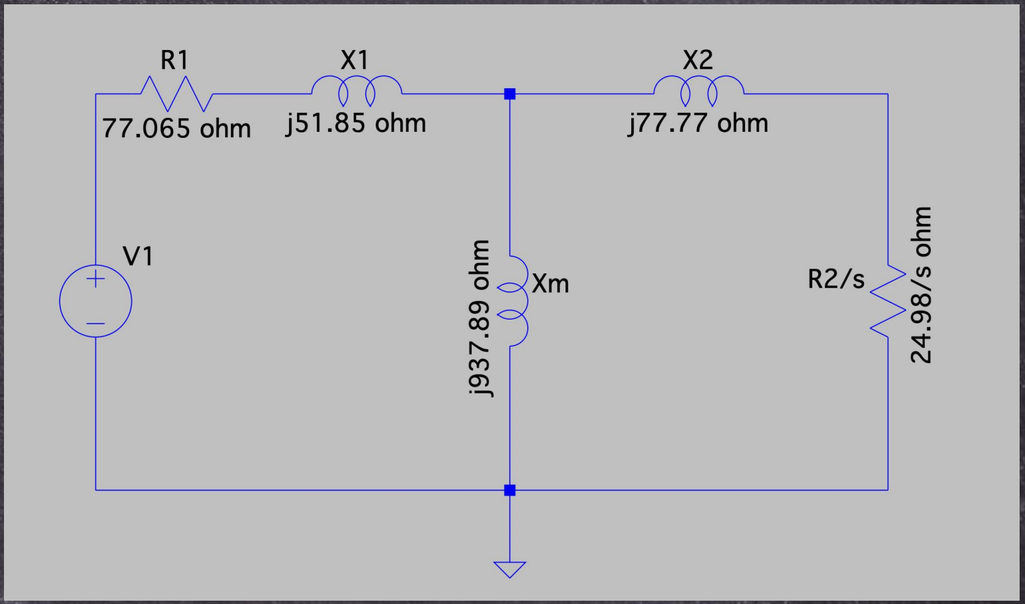

Figure: Equivalent circuit of the induction motor

Timeline of Project Implementation :

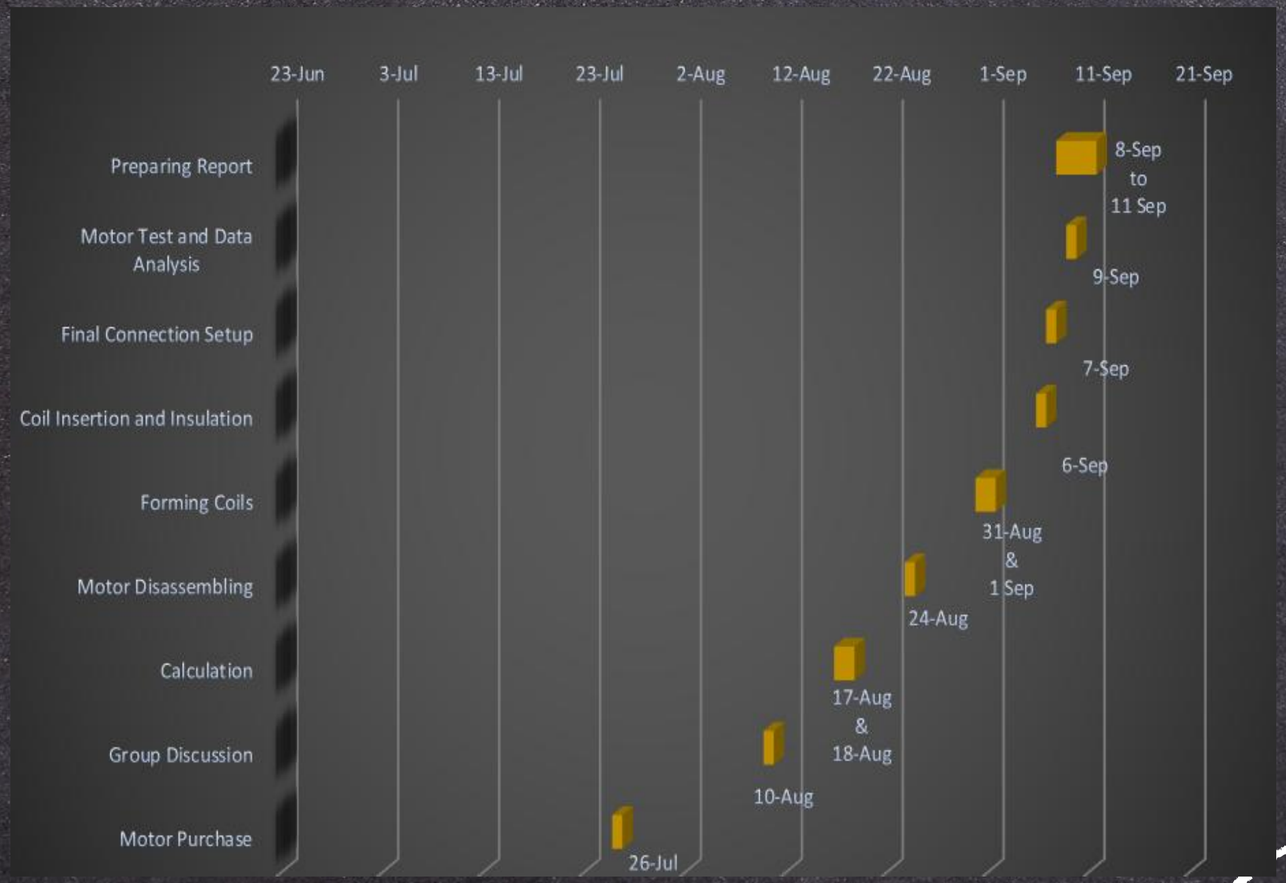

Figure: Gantt chart for the time line of our project implementation

Bill of Materials

As our motor was a new motor and it was 1Hp motor, the cost for purchasing motor is higher than any other cost.

Name of materials	Price (BDT)
Motor (3 phase ,1Hp)	5500
29 gauge (SWG) Cu wire (1kg) , insulating paper, burnish	1500
Transportation	1000
Technical Assistance	1000
Total Cost (BDT)	9000

Outcome of the Project

CO (Course Outcome) Statement	Corresponding PO's	Explanation
1. Determination of necessary parameters to design a motor using proper calculations.	PO(a): Engineering knowledge	To determine the parameters, we needed different theories, formulas. We used our mathematical, engineering Knowledge to relate our theoretical knowledge with the practical field of engineering.
2.Consideration of the cost, utility and environmental effect while choosing the best material for conduction and insulation	PO(c): Design & Development Solution PO(k): Finance	Before selecting any elements for our project, we took into consideration of it's effect on the environment as some elements can be harmful for environment and also we ensured that the expenses of the elements didn't exceed our budget.

Outcome of the Project

CO (Course Outcome) Statement	Corresponding PO's	Explanation
3. Performing necessary tests for equivalent circuit and torque-speed characteristics to be compared with the design later.	**PO(a): Engineering knowledge**	**For determining torque-speed characteristics, we did several tests and collected the data. We also used software for better clarification of our calculations.**
4. Acquiring the proficiency of team work, communication and project management.	PO(i): Individual and teamwork PO(j): Communication	We worked as a team throughout the duration of this project. Being familiar with teamwork may enable you in the future to be a member or leader of varied teams and in multi-disciplinary situations. Also, We had to do a number of tasks, including drafting excellent reports and paperwork, delivering effective presentations, and obtaining clear directions. All of this aided us in developing critical communication skills.

YouTube Link

https://youtu.be/w-Y72hmP168?si=blgaPy5flIvuzLPK

Thanks for your time!