Resource Allocation in Project Management

by
Cristina Selaru, MSc Student
Bucharest University of Economic Studies
Department of Economic Informatics and Cybernetics

*Abstract***.** Every day we meet new challenges that interfere in the workflow of different projects. Resources are scarce, therefore we need to carefully allocate them in order to obtain the desired results. The best way to deal with change in modern organizations involves project management. Therefore the question is which tools are best used to support structure, automation and efficiency of complex business processes.
This paper is intended to study a real life business process that can deliver different results accordingly to its allocation of resources. Creating different outputs for a certain system, hopefully, the best solution would be found an implemented in order to increase operational productivity.
Furthermore, based on the studied results, a complete analysis can be provided so that future mistakes can be avoided, and certain allocations to be classified as not feasible. Anyway, the project activities are subject to considerable uncertainty which can lead to schedule disruptions. Hopefully, in this paper a model can be developed that cannot provide with a proper resource allocation with approximate formulations that can lead to maximum results of the studied project.

Key words: project management, business process, resource allocation, Gantt diagram
JEL classification: M10, O22

1 Introduction

A project is a major one-time undertaking dedicated to some well-defined objectives and involving considerable personnel and equipment. It is usually initiated either by some need of the organization or by a customer request. The time and the resource estimations provide the duration and resource requirements for each activity as well as temporal constraints between activities that are connected by precedence relationships. The main purpose of this paper is to apply a known methodology on a real business project in order to evaluate its outcome based on the resources used.
The research on the resource constrained project scheduling problem (RCPSP) has widely expanded over the last few decades (for reviews see Brucker et aI., 1999; Herroelen et aI., 1998; Kolisch and Padman, 2001). The vast majority of these research efforts focus on exact and suboptimal procedures for constructing a workable schedule assuming complete information and a static deterministic problem environment. Project activities are scheduled subject to both precedence and resource constraints, mostly under the objective of minimizing the project duration. The resulting schedule, subsequently referred to as the *pre-schedule*, serves as the baseline for executing the project.
During project execution, however, project activities are subject to considerable uncertainty which may lead to numerous schedule disruptions. This uncertainty stems from a number of possible sources: activities may take more or less time than originally estimated, resources may become unavailable, material may arrive behind schedule, new activities may have to be incorporated or activities may have to be dropped due to changes in the project scope, ready times and due dates may be modified, etc. As a result, the validity of static deterministic scheduling has been questioned and/ or heavily criticized (Goldratt, 1997) and issues of project management under uncertainty and risk management have received growing attention (Meredith and Mantel, 2000; Chapman and Ward, 1997).
Given the presence of both random activity durations and resource constraints, some authors do not start from a pre-schedule but construct the project schedule through the application of so-called *scheduling policies* or *scheduling strategies* as time progresses (Igelmund and Radermacher, 1983). In this

paper I will try to determine from a practical point of view how the problem of resource allocation can be formulated and find real solutions for the real-life situation. Theoretical papers state the mathematical problem and find its solutions at a parameter's level(Yu. N. Kiselev, S.N. Avvakumov and M.V. Orlov), I will use this model to emphasize the theoretical background of the practical problem.

In the following years, a great deal of effort has been devoted to heuristic and exact algorithms for the project duration problem. In the 1990s, project planning methods gained increasing importance from their applicability to scheduling problems arising beyond the area of proper project management, for example, in production planning, time-tabling, or investment scheduling.

The current paper is structured in three parts, first one states the methodology of the software project management, the second one describes the actual process of automating a business process through an application and the last one contains the conclusions of the studied project.

2 Software project management methodology

According to Jason Charvat[1] a methodology is a set of guidelines or principles that can be tailored to a specific situation. In a project environment, these guidelines might be a list of things to do. A methodology could also be a specific approach, templates, forms and even checklists used over the project life cycle.

Some companies use methodologies that cover all aspects of the business, from pre-sales activities to operational support. Other companies use methodologies only during design and development. There is no universal methodology available; everybody uses its own methodology. Even similar methodologies get adapted to the specifics of the company, i.e. many project managers have realized that "methodologies from the book" must be modified and tailored to suit their own project needs.

[1] Jason Charvat: " Project Management Methodologies—Selecting, Implementing, and Supporting Methodologies and Processes for Projects", 2003

A company that uses certain methodology should make it transparent to the customers as much as possible. Furthermore, some companies offer their customers to choose from a set of methodologies the one that will be used for the project realization. This makes it possible for the customer to track the progress and to know exactly what intermediate results and deliverables should be available at certain points in time.

Finally, a methodology must not be too complex or inappropriate in any way to be seen as a burden for the people who use it. It must be light, understandable and goal oriented, it must be seen as a tool for achieving success. It should make the life easier.

In software development, the methodology has to have some milestones defined. Milestones are interim objectives, points of arrival in terms of time for purposes of progress management. In other words, milestones are used to define necessary deliverables at appropriate points in time. Mostly, when milestones are met certain phases are finished. Nevertheless, milestones can be defined within the phases if necessary.

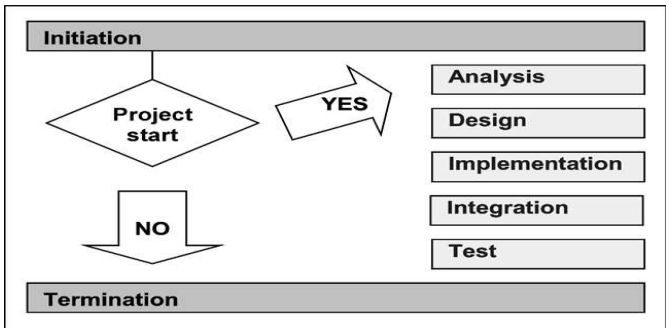

Figure 1. Project Phases

Table 1. Milestones

Milestone	Description	Phase
M100	Project "Kick Off" meeting	Initiation
M200	Completion of analysis	Analysis
M300	Completion of design	Design
M400	Code complete	Implementation
M500	Integrated system	Integration
M550	Beta release	Test
M600	Market release	Test

Resources, be it people, money, hardware or similar, are necessary throughout the whole project development. Based on experience and specifics of each project it is possible to foresee the trend of amount of necessary resources in regards to each project phase. Early phases as well as later phases involve less human resources. Hardware, on the other hand, is a resource that grows towards final phases.

This is characteristic for software development since final phases involve tests where it is actually attempted to simulate real environments. Of course, there can be more or less differences to what is presented here. Furthermore other resources, such as money, must be planned in advance according to inputs that are available at the beginning of the project. Every project manager must know the trends of resource consumption and according to the experience and available inputs (there are also software tools available for such purposes) must plan exact amounts of necessary resources for the whole project. During project development there will usually be necessary to do certain corrections, but the goal of planning is to make later corrections as minor as possible.

First phase of a project is the initiation. In this phase it is decided if the project will be done or not. The decision is based on the Project Decision Report as a result of undertaken activities at this stage.

Analysis and Design team must analyze customer's requirements and if possible provide a solution proposal. If it turns out that requirements analysis has a negative outcome due to complexity, risks or some other reason, the analysis and design team will suggest to the project manager to make a decision not to do the project. An immediate consequence must not necessarily be a final "no go", but further negotiations with the customer could take place.

The next phase of a project is the analysis, its main goal is to answer the question "WHAT should be done?"

There are number of important activities at this phase. A user requirements specification contains thorough description of the product requirements in terms of its functions, interfaces and other features from the perspective of the user. Both requirements must be reviewed externally (by the client) and internally (by development).

Project manager organizes a so-called "Kick Off" meeting where all project team members a gathered. The people get acquainted with each other and each person presents professional experiences in a form of short curriculum vitae. Project manager gets presented also. Furthermore, the project manager to the team presents main goals and functionality of the future product. Team members get acquainted with their future responsibilities.

This phase of the project that has a main goal to answer the question "HOW should the product be developed?" is the design part.

At this phase there is a close cooperation of analysis and development team. The goal is to produce architectural and detailed design of the product. Members of analysis and design team are being consulted by development team members on architectural questions to ensure that the architecture corresponds appropriately to what has been required by the client.

Detailed design specification describes the components of the architectural design specification together with their functions, interfaces used, algorithms and internal data structures as a basis for implementation. Both documents get reviewed internally and, if necessary, also externally.

The project manager prepares necessary tools for development, ensures that configuration management system is set up appropriately and prepares necessary things for future phases (integration and test). Quality assurance manager cooperates with test team to develop a test plan with appropriate test cases.

Implementation is a typical phase where development team plays a crucial role. Coding of software components takes place, component tests are being executed and all other activities are done with respect to the status and problems of development team.

In the integration phase code-ready components are being integrated into a single system and tested for mutual cooperation. Usually, development team tries to execute a number of successful requests against the system with respect to all required features of the product. As soon as this minimum level of quality is

reached, the phase is being documented and finished.

In the test phase the test team members and development team members have a central role. The test team executes test cases according to previously developed test specification and reports all errors or inconsistencies to the development team members. The development team does error corrections in the code. A test report is being produced that certifies that the product has reached the necessary level of quality and conformance to the requirements. After the review is finished, the product is being released to the market.

The final phase is the termination, when the finishing work is done. There are no further changes in the product itself or in the product documentation. The project team achieves all results of the project and identifies reusable results. Project manager writes a final report to the higher management levels and, together with quality assurance responsible, organizes a so-called "Lessons Learned" workshop. The whole project team is gathered once more and immediate impressions, results and experiences are discussed and documented. If the project was successful there is a further reason for celebration. One very important goal is to identify new and useful experiences, to document them and to make them available for all future projects.

The case study chosen for this article will go through every phase described before, but with more focus on the necessary resources rather than the phases themselves. The resources will be mainly working hours per employee that are used for developing automation application for saving a lot more time for others.

3 Automation of a business process

Since the introduction of Sourcing Allocation Standards, PVLs (preferred vendors lists) role in controlling spend with low value and high number of transactions became crucial. In all regions the priority in the past year and also in the current fiscal was to improve the PVLs so that the PVL and Sourcing compliance to reach their target. In each region, the CPO (Central Purchasing Operations) has a person that receives the updates, checks them and uploads the template in the system, using normal SAP tables update process.

So there are 3 persons, one in each CPO (Central Purchasing Operations) that are checking the PVL templates submitted by PVL submitters and whenever there are some errors spotted, send back the respective list and ask to be corrected. In EMEA each month we have an average of 2000 PVL lines that are checked manually. This occupies the respective half of the time of the respective person.

Process analysis consist with the project flow that it is better explained in Figure 3.

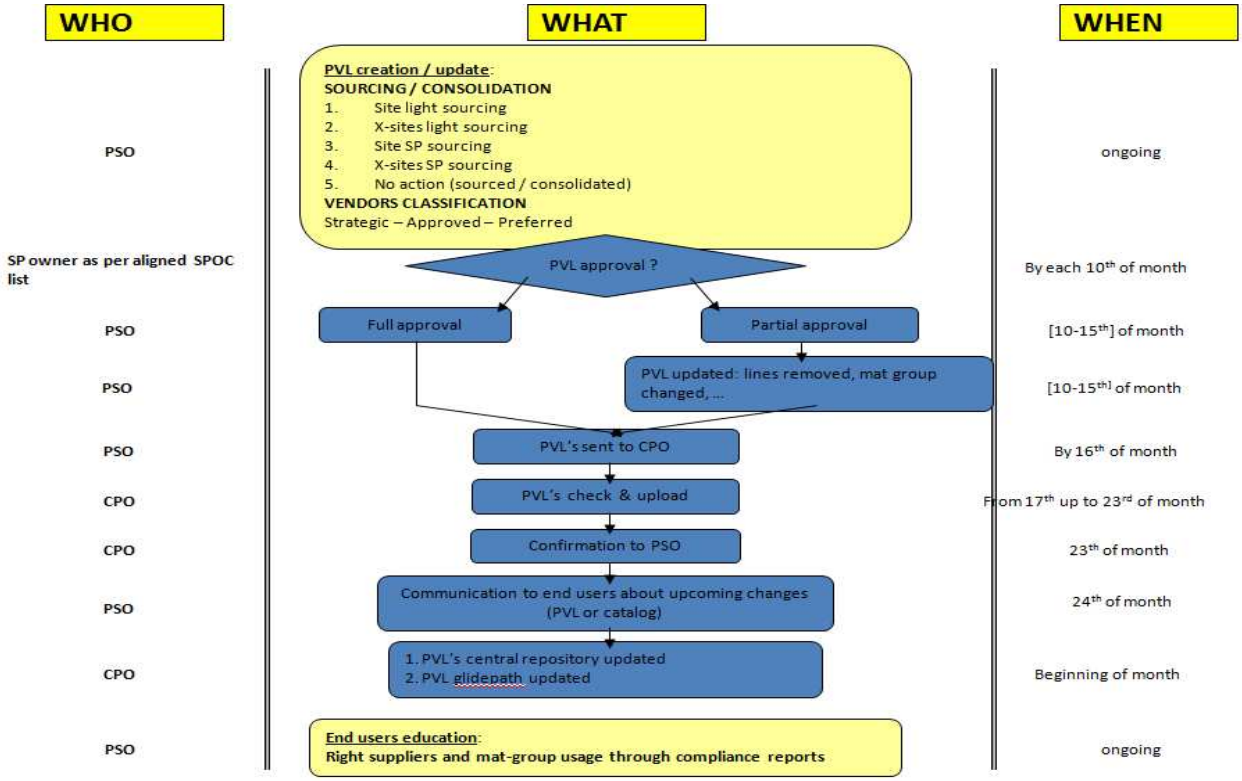

Figure 3. Process flow

Technical analysis involves finding software, hardware needs: licenses, server available Management approvals means to write letter of approval and send it to different management levels. In the design part the project team has to determine timetable for all of the activities and their dependencies and also determine resources needed: people, hardware, time.

In the test phase the developer tests on a few cases then chooses a PVL submitter and a PVL admin to help with the testing. This will take about 2 weeks.

In the integration phase there will be established the implementation steps, the order of the regions that will be trained and also the number of the needed sessions per each region.

When the application is in production, the project manager and the developers have to find out the user's adoption of the solution.

The project is analyzed from the operational research point of view.

Table 2: Activities and dependencies

No.	Activity name	Code	Preceding activities
1	Design process	D	-
2	Obtain management approvals	A	D
3	Find open source software for design of the application	OSS	D
4	Design application	DA	D
5	Link application with external documents	LE	D,DA
6	Design checking logic	DL	DA
7	Test the application	TA	DA, DL
8	Train the users	T	A,TA

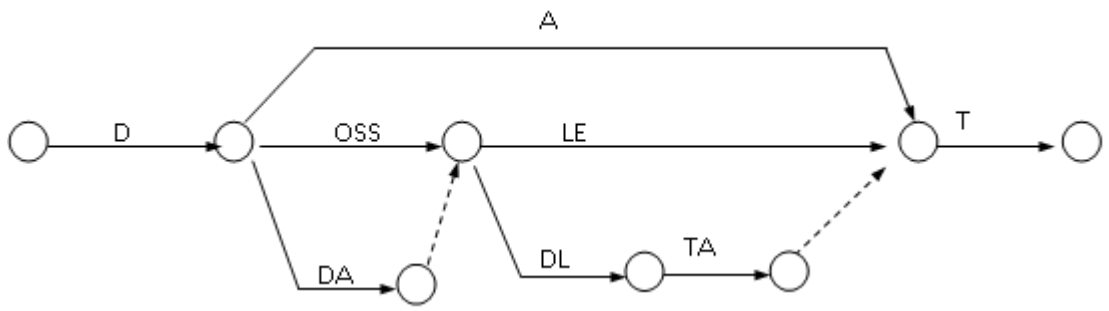

Figure 4. Arch on Arch representation

Of course these are the main activities that on the course of the evolving project will be divided in smaller parts that are easier to manage and to fulfill.

The design part will be divided into research and programming. Each step of the programming will have its own research part, in order to find the best solution for the programmers and the users. The design of the external links and the design of the testing logic, can be executed in the same time by different programmers right before the design of the whole application. This way, the activities DA, LE and DL can be divided in two main parts: DA_1, DA_2, LE_1, LE_2, DL_1, DL_2, having the same predecessors as shown in Figure 5.

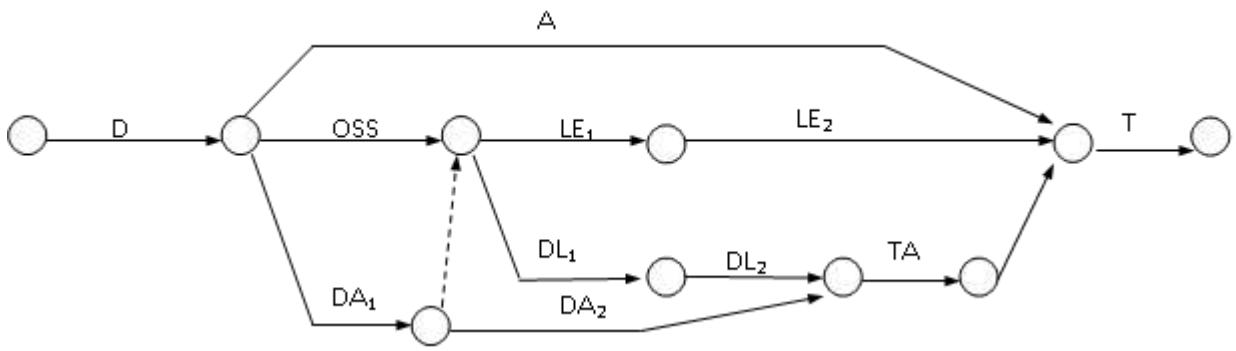

Figure 5. Extended AoA

Continuing the analysis of the AoA network I will fix the total projection time (TPT), meaning the shortest time in which it will be ready. This interval will be determined by a set of sequences named critical activities. The sequence of activities is the critical road.

Each activity will have determined an earliest starting time (EST) and an earliest finishing time (EFT) calculated depending on its duration.

The critical path will be determined by the activities that have no time reserve meaning that its latest finishing time (LFT) will be equal to the latest starting time (LST).

Furthermore, for each activity there is determined the earliest event time (EET) by going forward with the project phases and the latest event time (LET) will be determined by going backward, and this time has to be exact in order to finish the project in time.

These times will be considered as sum of the hours working on the specific activity and following operational research methods and having the each event duration given. Table 3 reflects the critical activities of this project.

Table 3. Activities details

Activity name	Activity Code	Duration in days	EST	EFT	LST	LFT	Total reserve
Design process	D	14	0	14	0	14	0
Obtain management approvals	A	2	14	16	92	94	78
Find open source software for design of the application	OSS	5	14	19	14	19	0

Design application	DA	40	19	59	19	59	0
Link application with external documents	LE	9	59	68	60	69	1
Design checking logic	DL	10	59	69	59	69	0
Test the application	TA	35	69	94	69	94	0
Train the users	T	16	94	110	94	110	0

From arch analysis I can conclude that only the approval and the link to the external documents are not critical activities. The other activities have to start when they are scheduled so the project finishes in time.

From the practical point of view, the theoretical outcome is close to the actual project development, as the approvals can be obtained while the project is in progress. Also the external documents that might be needed in the application can be created or included in the application while it is in progress.

Anyway, this is a rough analysis of a project because the resources needed were not taken into consideration. The analysis will go deeper into the project's phases.

Therefore I will define the resources such as people and hardware and also their load during the development of the project. Also the activities have been detailed. First of all, the resources are detailed in table 4.

Using project management software (Primavera), these resources have been assigned to the extended project by its activities as shown in Table 5. I have also used Primavera for project management in order to have a better view of the project.

Table 4. Resource workload

Resource ID	Resource Name	Resource type	Units of measure
PHP	PHP database	Non labor	24h/day
SE	Server	Non labor	24h/day
A	Alex	Labor	8h/day
S	Sorin	Labor	8h/day
B	Bogdan	Labor	8h/day
R	Raluca	Labor	8h/day
C	Cristina	Labor	8h/day

The resources are allocated in parallel, due to the nature of the relationships between the activities, each one depending on one or more preceding other.

At first they are allocated with actual time frame and then according to the leveling procedure they are reallocated in order to obtain a better structure of the resources so there is not an overuse or underuse of a resource. I will group them in Labor and Non Labor resources and study their allocation based on the Gantt diagram.

Table 5. Resource needs and dates of activities

Activity ID	Activity Name	Resources	Days	Start	Labor Units(h)	Nonlabor Units(h)
S	Start		0	14-May-12	0	0
D	Design Process	Bogdan, Sorin	14	14-May-12	20	0
A	Management approvals	Sorin	2	01-Jun-12	10	0
DA	Design application		0	08-Jun-12	0	0
OSS	Open source software	Cristina, Raluca	5	05-Jun-12	3	0
DPHP	Design PHP database	Raluca, Cristina, PHP database, Server	2	12-Jun-12	1	2
DAS	Design single selection	Raluca, Cristina, PHP database, Server	5	14-Jun-12	4	5
DASel	Design Multiple selection	Raluca, Cristina	10	12-Jun-12	6	0
CL	Checking logic for templates	Server, Bogdan, Raluca, Cristina	10	15-Jun-12	24	24
TA	Test the application	Alex, Cristina, Server, PHP database	5	29-Jun-12	20	20
L	Launch the application	Presentation Flyers, Sorin, Bogdan	1	06-Jul-12	10	50
TU	Train the users		0	09-Jul-12	0	0
U	User's accounts	Cristina	1	09-Jul-12	8	0
TS	Training sessions	Cristina, Bogdan	30	10-Jul-12	20	0
AD	Adoption report	Cristina	1	20-Aug-12	2	0
US	User's satisfaction survey	Cristina, Raluca, Bogdan	1	21-Aug-12	2	0

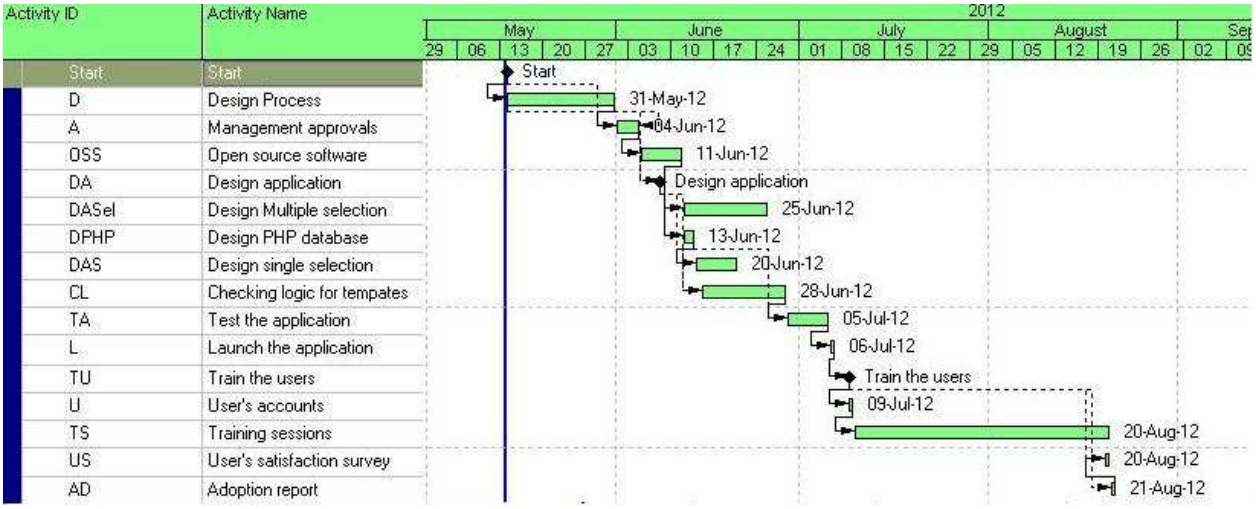

Figure 6. Gantt diagram

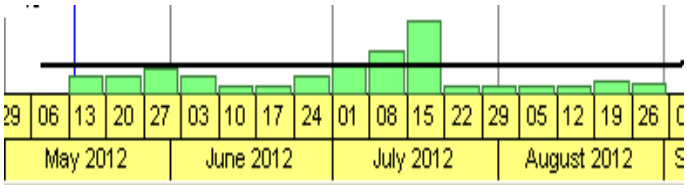

Figure 7. Labor histogram

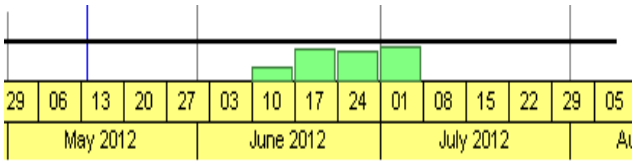

Figure 8. Non labor histogram

As these histograms show, the non-labor resources are allocated accordingly to their limits, so here there is no need for reallocation. On the other hand, the Labor resources exceed the limit in several time frames, therefore the activities are to be rescheduled in order to obtain a better allocation of the resources. Although the activities after 15th of July have considerable reserves of resources, they cannot be rearranged, because in this period of time, the training sessions take place and they cannot be held if the application is not ready.

The project manager makes the decision of reprogramming some activities in order to have a leveled resource allocation.

Even though some activities have been programmed to take place in the same time (design of the single selection and multiple selection), there still remains a period of time with human resources used at their most, but at least they are not overused. See Figure 8 for labor resources histogram.

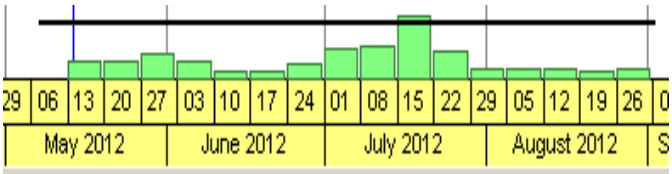

Figure 9. Leveled resource allocation

As the histogram shows, the activity that requires the most resources is the testing. This activity needs all the resources that have been working on developing the application to work together to finalize it. The tester has the responsibility to discover any flaw, and the developers have to fix these flaws immediately as everyone is working on a determined schedule. The project manager has the responsibility to make sure that the project meets its deadlines.

4 Conclusions

The appearance and development of the project management has occurred as a consequence of the need to adapt the theory and practice of management to the projects specific. In practice, the application of the tools and techniques of project management is facilitated by the use of specialized software for project management.

The things presented and explained here give a rough overview of what is a project management in a software development area

and what it consists of. The goal was to present at least most important aspects, terminology and procedures at both theoretical and practical level.

Every organization has some specifics that can more or less influence how the projects are managed. Furthermore, within a single organization there are rarely two so similar projects that no significant differences exist in the way the projects are managed.

This paper has proposed a model of resource allocation inspired by a real business process. The resources have been allocated in parallel and this has offered the project a robustness and ease in the leveling process. Given the complexity of the project, the use of project management software was very useful in order to illustrate better the theory through practice. Therefore a project manager can better evaluate the loading of each resource and to move activities at different dates so there is an even load of the resources during the project phases.

The most interesting part is that this analysis helped me to have a good overview of a past project and to apply the new abilities in future projects.

Acknowledgment

The paper is written with the support of the P&G colleagues that have provided me with the necessary data for the study.

References

Brucker, P., Drexel, A., Moring, R., Neumann, K. and Peach, E. (1999). Resource constrained project scheduling: notation, classification, models and methods. *European Journal of Operational Research*, 112, 3-41.

Bowers, I.E. (1995). Criticality in resource constrained networks. *Journal of the Operational Research Society*, 46, 80-91

Christophe Schwedt (2005) – "Resource Allocation in Project Management" *GORE-PUBLICATIONS*

Goldratt, E.M. (1997). *Critical chain.* The North River Press.

Herroelen, W., De Reyck, B. and Demeulemeester, E. (1998). Resource-constrained project scheduling: a survey of recent developments. *Computers and Operations Research*, 25, 4, 279-302.

Igelrnund, G. and Radermacher, F.J. (1983). Preselective strategies for the optimization of stochastic project networks under resource constraints. *Networks*, 13, 1-28.

Jason Charvat (2003): "Project Management Methodologies – Selecting, Implementing and Supporting Methodologies and Processes for Projects", John Wiley and Sons

Kolisch, R and Padman, R (2001). An integrated survey of deterministic project scheduling. *Omega*, 49, 3, 249-272.

Goldratt, E.M. (1997). *Critical chain.* The North River Press.

Meredith, J.R and Mantel, S.J. Jr. (2000). *Project management. A managerial approach. Fourth edition.* Wiley & Sons.

Chapman, C. and Ward, S. (1997). *Project risk management: processes, techniques and insights.* Wiley.

Roland Agrees (2002) "pm baseline", Project Management Austria

Yu. N. Kiselev, S. N. Avvakumov, and M. V. Orlov(2009), Resource Allocation Problem in a Two-Sector Economic Model of Special Form, Differentsial'nye Uravneniya,Vol. 45, No. 12, pp. 1756–1774.

Author description

Cristina Selaru is affiliated to Bucharest University of Economic Studies, Department of Economic Informatics and Cybernetics, and she has studied Cybernetics and Qualitative Economy. The first studies were made on the game theory, concerning the cement market, and now, this paper is focused on project management, resource allocation.