Chapter 2.3, Problem 22E

Problem

Use symbols to write the logical form of each argument in, and then use a truth table to test the argument for validity. Indicate which columns represent the premises and which represent the conclusion, and include a few words of explanation showing that you understand the meaning of validity.

Exercise

If Tom is not on team A, then Hua is on team B.

If Hua is not on team B, then Tom is on team A.

∴Tom is not on team *A* or Hua is not on team *B*.

Step-by-step solution

Step 1 of 3

The objective is to write the logical form of the argument using symbols and to test the argument is valid or not.

"If Tom is not on team A, then Hua is on team B.

If Hua is not on team B, then Tom is on team A.

$\therefore$ Tom is not on team A or Hua is not on team B."

Let p represent "Tom is on team *A*" and q represents "Hua is on team *B*".

Rewrite the argument using symbols as follows:

$$\begin{array}{l} \sim p \to q \\ \sim q \to p \\ \hline \therefore \sim p \vee \sim q \end{array}$$

Step 2 of 3

Construct a truth table for the given argument.

Fill in the four possible combinations of truth values for p and q.

p	q
T	T
T	F
F	T
F	F

Fill in the columns for $\sim p$ and $\sim q$ using the definitions of negations:

p	q	$\sim p$	$\sim q$
T	T	F	F
T	F	F	T
F	T	T	F
F	F	T	T

Step 3 of 3

Then fill in the columns for $\sim p \to q, \sim q \to p$, and $\sim p \vee \sim q$ using the definitions of $if-then$ and or.

				Premises		Conclusion
p	q	$\sim p$	$\sim q$	$\sim p \to q$	$\sim q \to p$	$\sim p \vee \sim q$
T	T	F	F	T	T	F
T	F	F	T	T	T	T
F	T	T	F	T	T	T
F	F	T	T	F	F	T

The first row shows that it is possible for an argument of this form to have true premises and false conclusion.

Therefore, the argument is **invalid.**

Chapter 2.3, Problem 23E

Problem

Use symbols to write the logical form of each argument in, and then use a truth table to test the argument for validity. Indicate which columns represent the premises and which represent the conclusion, and include a few words of explanation showing that you understand the meaning of validity.

Exercise

Oleg is a math major or Oleg is an economics major.

If Oleg is a math major, then Oleg is required to take Math 362.

∴Oleg is an economics major or Oleg is not required to take Math 362.

Step-by-step solution

Step 1 of 3

The objective is to determine whether the argument is valid or not using a truth table:

First represent the argument in symbolic notation as follows:

M : Oleg is a math major

E : Oleg is an economics major

C : Oleg must take Math 362 course.

Rewrite the argument in symbols as:

$M \vee E$
$M \to C$
$\therefore E \vee \sim C$

Step 2 of 3

Construct a truth table as shown below:

Fill in the eight possible combinations of truth values for $M, E,$ and C.

M	E	C
T	T	T
T	T	F
T	F	T
T	F	F
F	T	T
F	T	F
F	F	T
F	F	F

Then fill in the columns for $\sim C$ using the definitions of *negation*.

M	E	C	$\sim C$
T	T	T	F
T	T	F	T
T	F	T	F
T	F	F	T
F	T	T	F
F	T	F	T
F	F	T	F
F	F	F	T

Step 3 of 3

Next fill in the $M \vee E, M \to C,$ and $E \vee \sim C$ column using the definition of *if – then* and *or*.

				Premises		Conclusion
M	E	C	$\sim C$	$M \vee E$	$M \to C$	$E \vee \sim C$
T	T	T	F	T	T	T
T	T	F	T	T	F	T
T	F	T	F	T	T	F
T	F	F	T	T	F	T
F	T	T	F	T	T	T
F	T	F	T	T	T	T
F	F	T	F	F	T	F
F	F	F	T	F	T	T

From the table, observe that rows 1, 3, 5, and 6 are the critical rows, as the premises are true.

To check for the validity, in each situation when the premises are both true, the conclusion is also true.

But the truth table reports **false** for row 3.

Therefore, the argument is $\boxed{\text{invalid}}$.

Chapter 2.3, Problem 24E

Problem

Some of the arguments in are valid, whereas others exhibit the converse or the inverse error. Use symbols to write the logical form of each argument. If the argument is valid, identify the rule of inference that guarantees its validity. Otherwise, state whether the converse or the inverse error is made.

Exercise

If Jules solved this problem correctly, then Jules obtained the answer 2.

Jules obtained the answer 2.

∴Jules solved this problem correctly.

Step-by-step solution

Step 1 of 4

The argument is

If Jules solved this problem correctly, then Jules obtained the answer 2.

Jules obtained the answer 2.

? Jules solved this problem correctly.

Let *p* be "Jules solved this problem correctly" and let *q* be "Jules obtained the answer 2".

Then, the given argument has the abstract form

If *p* then *q*

q

? *p*

Step 2 of 4

<u>Check if the argument is valid</u>

An argument form is called **valid** if and only if, whenever all the premises are true, the conclusion is also true.

<u>Premises:</u> All the statements in an argument except for the final one are called premises.

<u>Conclusion:</u> The final statement is called the conclusion.

In the given argument,

Premises: If *p* then *q*, which is same as $p \to q$

q

Conclusion: *p*

Step 3 of 4

Draw a truth table with the premises and conclusion as the columns.

	Premises	Conclusion		
p	q	$p \to q$	q	p
T	T	T	T	T
T	F	F	F	T
F	T	T	T	F
F	F	T	F	F

The first and third rows (shaded row) are the critical rows as all the premises are true. Check for the corresponding conclusion. Though in the first row the conclusion is true, it is false in the third row. The third row shows that even when the premises are true, the conclusion can be false. Hence, this argument is $\boxed{\text{invalid}}$.

Step 4 of 4

In the given argument, if the premise $p \to q$ were replaced by its converse $q \to p$, then the conclusion *p* would follow from the premises $q \to p$ and *q*. Hence, this invalid argument form is the $\boxed{\text{converse error}}$.

Chapter 2.3, Problem 25E

Problem

Some of the arguments in are valid, whereas others exhibit the converse or the inverse error. Use symbols to write the logical form of each argument. If the argument is valid, identify the rule of inference that guarantees its validity. Otherwise, state whether the converse or the inverse error is made.

Exercise

This real number is rational or it is irrational.

This real number is not rational.

∴This real number is irrational.

Step-by-step solution

Step 1 of 1

Let p represent "the real number is rational" and q represent "the real number is irrational."

Then, the argument is of the form

$p \vee q$

$\square\ p$

$\therefore q$

$\therefore$ The argument is valid and is elimination

Chapter 2.3, Problem 26E

Problem

Some of the arguments in are valid, whereas others exhibit the converse or the inverse error. Use symbols to write the logical form of each argument. If the argument is valid, identify the rule of inference that guarantees its validity. Otherwise, state whether the converse or the inverse error is made.

Exercise

If I go to the movies, I won't finish my homework. If I don't finish my homework, I won't do well on the exam tomorrow.

∴If I go to the movies, I won't do well on the exam tomorrow.

Step-by-step solution

Step 1 of 1

Let p represent "I go to the movies", q represent "I won't finish my homework" and r represent "I won't do well on the exam tomorrow".

Then, the argument is of the form

$p \to q$

$q \to r$

$\therefore p \to r$

$\therefore$ The argument is valid and is transitive

Chapter 2.3, Problem 27E

Problem

Some of the arguments in are valid, whereas others exhibit the converse or the inverse error. Use symbols to write the logical form of each argument. If the argument is valid, identify the rule of inference that guarantees its validity. Otherwise, state whether the converse or the inverse error is made.

Exercise

If this number is larger than 2, then its square is larger than 4.

This number is not larger than 2.

∴The square of this number is not larger than 4.

Step-by-step solution

Step 1 of 2

Consider the following argument:

If the number is larger than 2, then it's square is larger than 4.

This number is not larger than 2.

Therefore, the square of the number is not larger than 4.

Step 2 of 2

Assume that p represent "the number is larger than 2," and q represent "the square is larger than 4".

Consider the Modus Tollens rule:

$$\begin{aligned} &p \to q \\ &\sim q \\ &\therefore \sim p \end{aligned}$$

Then, the above argument has the form as follows:

$$\begin{aligned} &p \to q \\ &\sim p \\ &\therefore \sim q \end{aligned}$$

Hence, the argument is invalid and is an inverse error.

Chapter 2.3, Problem 28E

Problem

Some of the arguments in are valid, whereas others exhibit the converse or the inverse error. Use symbols to write the logical form of each argument. If the argument is valid, identify the rule of inference that guarantees its validity. Otherwise, state whether the converse or the inverse error is made.

Exercise

If there are as many rational numbers as there are irrational numbers, then the set of all irrational numbers is infinite.

The set of all irrational numbers is infinite.

∴There are as many rational numbers as there are irrational numbers.

Step-by-step solution

Step 1 of 3

Consider the argument,

'The set of all irrational numbers is infinite when the rational numbers and irrational numbers are same'.

The objective is to use symbols to write the logical form of the argument.

And identify the rule of inference that guarantees the validity for valid argument.

Otherwise, write whether the converse or the inverse error is occurs.

Step 2 of 3

Let p represent "there are as many rational numbers as there are irrational numbers" and q represent "the set of all irrational numbers is infinite".

Then, the argument has the form

$p \to q$

q

$\therefore p$

Here no Rules of Inference is satisfying this argument.

Step 3 of 3

The conclusion of the argument would follow from the premises.

If the premise $p \to q$ were replaced by its converse.

This type of replacement is not possible because a conditional statement is not logically equivalent to its converse.

Therefore, the argument is **invalid** and is a converse error.

Chapter 2.3, Problem 29E

Problem

Some of the arguments in are valid, whereas others exhibit the converse or the inverse error. Use symbols to write the logical form of each argument. If the argument is valid, identify the rule of inference that guarantees its validity. Otherwise, state whether the converse or the inverse error is made.

Exercise

If at least one of these two numbers is divisible by 6, then the product of these two numbers is divisible by 6. Neither of these two numbers is divisible by 6.

∴The product of these two numbers is not divisible by 6.

Step-by-step solution

Step 1 of 2

The objective is to rewrite the following argument using symbols and if the argument is valid, identify the rules of inference that guarantees the validity. Otherwise state whether the converse or inverse error is made.

"If at least one of these two numbers is divisible by 6, then the product of these two numbers is divisible by 6.

Neither of these two numbers is divisible by 6.

$\therefore$ The product of these two numbers is not divisible by 6."

Use the symbols to represent the statements in the above argument as follows,

$p :=$ At least one of these two numbers is divisible by 6.

$q :=$ The product of these two numbers is divisible by 6.

Now, rewrite the argument using symbols as follows:

$$\left.\begin{array}{l} p \to q \\ \square\, p \end{array}\right\} \text{Premises}$$
$$\overline{\therefore \square\, q} \quad \} \text{Conclusion}$$

Step 2 of 2

Construct a truth table for the given argument.

Fill in the four possible combinations of truth values for p and q.

p	q
T	T
T	F
F	T
F	F

Fill in the columns for $p \to q, \square\, p$, and $\square\, q$ using the definitions of *negation* and *if – then*:

		Premises	Conclusion		
p	q	$p \to q$	$\square\, p$	$\square\, q$	
T	T	T	F	F	
T	F	F	F	T	
F	T	T	T	F	← This row shows that an argument of this form can have true premises and a false conclusion. Hence, this is an invalid argument
F	F	T	T	T	

The conclusion of the argument would follow from the premises if the premise $p \to q$ were replaced by its inverse.

Thus, the argument form is called the **inverse error.**

Chapter 2.3, Problem 30E

Problem

Some of the arguments in are valid, whereas others exhibit the converse or the inverse error. Use symbols to write the logical form of each argument. If the argument is valid, identify the rule of inference that guarantees its validity. Otherwise, state whether the converse or the inverse error is made.

Exercise

If this computer program is correct, then it produces the correct output when run with the test data my teacher gave me.

This computer program produces the correct output when run with the test data my teacher gave me.

∴This computer program is correct.

Step-by-step solution

Step 1 of 2

Consider the statement:

If this computer program is correct, then it produces the correct output when it is run with the test data my teacher gave me.

This computer program produces the correct output when run with the test data my teacher gave me.

Therefore, this computer program is correct.

Step 2 of 2

Let p represent "This computer program is correct" and q represent "computer program produces the correct output when run with the test data my teacher gave me."

Then, this argument is of the form

$p \to q$

q

$\therefore p$

Therefore, the argument is invalid and is a converse error.

Because the conclusion of the argument would follow from the premises, $p \to q$ was replaced by its converse. Such replacement is not allowed.

Chapter 2.3, Problem 31E

Problem

Some of the arguments in are valid, whereas others exhibit the converse or the inverse error. Use symbols to write the logical form of each argument. If the argument is valid, identify the rule of inference that guarantees its validity. Otherwise, state whether the converse or the inverse error is made.

Exercise

Sandra knows Java and Sandra knows C++.

∴Sandra knows C++.

Step-by-step solution

Step 1 of 2

Consider the argument:

Sandra knows Java and Sandra knows *C*++.

∴ Sandra knows *C*++.

The objective of the problem is to use symbols to write the logical form of the given argument. Also, if the argument is valid, identify the rule of inference that guarantees its validity.

Let *p* denotes the statement "Sandra knows Java" and *q* denotes the statement "Sandra knows *C*++".

Then, the statement "Sandra knows Java and Sandra knows *C*++" can be translated by using the wedge symbol as

$p \wedge q$

Thus, the given argument can be rewritten as

$$\begin{array}{l} p \wedge q \\ \therefore q \end{array}$$

Hence, the given argument can be written in logical form as $\boxed{\begin{array}{l} p \wedge q \\ \therefore q \end{array}}$.

Step 2 of 2

The below logical forms are used for specializing.

$$\begin{array}{ll} 1.\ \begin{array}{l} p \wedge q \\ \therefore p \end{array} & 2.\ \begin{array}{l} p \wedge q \\ \therefore q \end{array} \end{array}$$

The above logical form corresponds with the specialization. Since, specialization is an inference rule, the given argument is valid.

Hence, the rule of inference that guarantees the validity of the given argument is $\boxed{\text{specialization}}$.

Chapter 2.3, Problem 32E

Problem

Some of the arguments in are valid, whereas others exhibit the converse or the inverse error. Use symbols to write the logical form of each argument. If the argument is valid, identify the rule of inference that guarantees its validity. Otherwise, state whether the converse or the inverse error is made.

Exercise

If I get a Christmas bonus, I'll buy a stereo.

If I sell my motorcycle, I'll buy a stereo.

∴If I get a Christmas bonus or I sell my motorcycle, then I'll buy a stereo.

Step-by-step solution

Step 1 of 2

The objective is to determine whether the following argument is valid or not by identifying the rule of inference that admits the validity.

If I get a Christmas bonus, I'll buy a stereo.

If I sell my motorcycle, I'll buy a stereo.

$\therefore$ If I get a Christmas bonus or I sell my motorcycle, then I'll buy a stereo.

Let p represents I get a Christmas bonus, q represents I sell my motorcycle, and r represents I'll buy a stereo.

The arguments in symbolic representation is:

$$\begin{aligned} &p \to r \\ &q \to r \\ \therefore &(p \vee q) \to r \end{aligned}$$

Step 2 of 2

The conclusion in the above arguments is conditional, so an equivalent argument uses $p \vee q$ as one of the premises and r as the conclusion.

That is:

$$\begin{aligned} &p \vee q \\ &p \to r \\ &q \to r \\ \therefore\ &r \end{aligned}$$

This logical form corresponds to the inference rule proof by division into cases.

Therefore, the argument is **valid**.

Chapter 2.3, Problem 33E

Problem

Give an example (other than Example) of a valid argument with a false conclusion.

Example

A Valid Argument with a False Premise and a False Conclusion

The argument on the next page is valid by modus ponens. But its major premise is false, and so is its conclusion.

If John Lennon was a rock star, then John Lennon had red hair.

John Lennon was a rock star.

∴ John Lennon had red hair.

Step-by-step solution

Step 1 of 2

A valid argument with a false conclusion is as follows

3 divides by 5 or 3 divides by 7

3 does not divide by 5

∴ 3 divides by 7

Step 2 of 2

This is an example for a compound statement, which is logically valid, but has a false conclusion.

This can be logically interpreted as

$p \vee q$

$\sim p$

$\therefore q$

Chapter 2.3, Problem 34E

Problem

Give an example (other than Example) of an invalid argument with a true conclusion.

Example

An Invalid Argument with True Premises and a True Conclusion

The argument below is invalid by the converse error, but it has a true conclusion.

If New York is a big city, then New York has tall buildings.

New York has tall buildings.

∴ New York is a big city.

Step-by-step solution

Step 1 of 3

Consider the problem provided in the textbook.

The objective is to provide an example of an invalid argument with a true conclusion.

Step 2 of 3

Example:

If George W. Bush is president of the United States, then George W.

Bush must be 100 years of age or older.

George W. Bush must be 100 years of age or older.

So, George W. Bush is president of the United States.

Step 3 of 3

Since, the logic is invalid and the premises are false. Therefore, for the premises to be true, all of them need to be true.

But, for the premises to be false, only one need be false.

So, an argument with a mixture of true and false premises is still considered to be an argument with false premises--it is false that all of the premises are true.

Nevertheless, in these examples, the conclusion is true.

Chapter 2.3, Problem 35E

Problem

Explain in your own words what distinguishes a valid form of argument from an invalid one.

Step-by-step solution

Step 1 of 1

In some cases, an argument is logically valid, but based on the logical rules given in the theory, the conclusion may be wrong. In some other cases, arguments are logically invalid, but the conclusion may be correct.

So we can say that logical inference has nothing to do with the correctness of the conclusion of the argument.

Chapter 2.3, Problem 36E

Problem

Given the following information about a computer program, find the mistake in the program.

a. There is an undeclared variable or there is a syntax error in the first five lines.

b. If there is a syntax error in the first five lines, then there is a missing semicolon or a variable name is misspelled.

c. There is not a missing semicolon.

d. There is not a misspelled variable name.

Step-by-step solution

Step 1 of 3

We have been given the following information about a computer program, we need to find the mistake in the program:

a. There is an undeclared variable or there is a syntax error in the first five lines

b. If there is a syntax error in the first five lines, there is a missing semicolon or a variable name is misspelled.

c. There is not a missing semicolon.

d. There is not a misspelled variable name.

Step 2 of 3

Let p = undeclared variable

q = Syntax error in first five lines

r = semicolon is missing

s = misspelled variable name

From condition (a) we get that for the program to be erroneous $p \vee q$ has to be true.

From condition (b) we get that $q \to r \vee s$.

Constructing the truth table we get,

p	r	s	$q \to r \vee s$	$p \vee q$
				T

From condition (c) we deduce that r is False.

From condition (d) we deduce that s is False.

Thus,

p	r	s	$q \to r \vee s$	$p \vee q$
	F	F		T

Step 3 of 3

r and s being false implies that q is also false (division into cases).

Thus,

p	r	s	$q \to r \vee s$	$p \vee q$
	F	F	F	T

Now, for $p \vee q$ at least one of p or q has to be true. Since q is false (as proved above), therefore p has to be true.

Therefore,

p	r	s	$q \to r \vee s$	$p \vee q$
T	F	F	F	T

Thus, the mistake in program is due to an undeclared variable.

Comments (1)

The table is missing the q value.

Chapter 2.3, Problem 37E

Problem

In the back of an old cupboard you discover a note signed by a pirate famous for his bizarre sense of humor and love of logical puzzles. In the note he wrote that he had hidden treasure somewhere on the property. He listed five true statements (a-e below) and challenged the reader to use them to figure out the location of the treasure.

a. If this house is next to a lake, then the treasure is not in the kitchen.

b. If the tree in the front yard is an elm, then the treasure is in the kitchen.

c. This house is next to a lake.

d. The tree in the front yard is an elm or the treasure is buried under the flagpole.

e. If the tree in the back yard is an oak, then the treasure is in the garage.

Where is the treasure hidden?

Step-by-step solution

Step 1 of 3

Consider the five true statements as follows:

a. If this house is next to a lake, then the treasure is not in the kitchen.

b. If the tree in the front yard is an elm, then the treasure is in the kitchen.

c. This house is next to a lake.

d. The tree in the front yard is an elm or the treasure is buried under the flagpole.

e. If the tree in the backyard is an oak, then treasure is in the garage.

The objective is to find the location where the treasure is hidden using the above true statements and inference rules.

Step 2 of 3

Recall the following inference rules:

Negation $\sim p$: not p.

Disjunction $p \vee q$: p or q.

Conjunction $p \wedge q$: p and q.

Conditional statement $p \to q$: If p, then q

Biconditional statement $p \leftrightarrow q$: p if and only if q

Modus ponens

$$\begin{array}{l} p \to q \\ \quad p \\ \therefore\ q \end{array}$$

Modus tollens

$$\begin{array}{l} p \to q \\ \quad \sim q \\ \therefore\ \sim p \end{array}$$

Elimination

$$\begin{array}{l} p \vee q \\ \sim p \\ \therefore q \end{array}$$

Step 3 of 3

Consider the following notation to the corresponding statements.

p=This house is next to a lake.

q= The treasure is in the kitchen.

r=The tree in the front yard is an elm.

s= The treasure is buried under flagpole.

t=The tree in the backyard is an oak.

u=The treasure is in the garage.

Now, translate the given five true statements using the above notations as,

a. $p \to \sim q$

b. $r \to q$

c. p

d. $r \vee s$

e. $t \to u$

Now, using the above premises (since the corresponding given statements are true.) and the inference rules derive the conclusion as follows:

Step	Reason
1. $p \to \sim q$	Premise
2. $r \to q$	Premise
3. p	Premise
4. $r \vee s$	Premise
5. $t \to u$	Premise
6. $\sim q$	Modus ponens of (1) and (3).
7. $\sim r$	Modus tollens of (2) and (6).
8. s	Elimination of (4) and (7).

Therefore, the 's' present in step 8 is the derived conclusion and thus the treasure is buried under the flagpole.

Hence, the required conclusion is, the treasure is buried under the flagpole.

Chapter 2.3, Problem 38E

Problem

You are visiting the island described in Example 2.3.14 and have the following encounters with natives.

a. Two natives *A* and *B* address you as follows:

A says: Both of us are knights.

B says: *A* is a knave.

What are *A* and *B*?

---

b. Another two natives *C* and *D* approach you but only *C* speaks.

C says: Both of us are knaves.

What are *C* and *D*?

---

c. You then encounter natives *E* and *F*.

E says: *F* is a knave.

F says: *E* is a knave.

How many knaves are there?

---

d. Finally, you meet a group of six natives, *U, V, W, X, Y,* and *Z*, who speak to you as follows:

U says: None of us is a knight.

V says: At least three of us are knights.

W says: At most three of us are knights.

X says: Exactly five of us are knights.

Y says: Exactly two of us are knights.

Z says: Exactly one of us is a knight.

Which are knights and which are knaves?

Step-by-step solution

Step 1 of 7

Consider a provided in the text book a person is visited in the island and have the following encounter with the natives.

Step 2 of 7

(a)

Two natives A and B addressed that person as follows:

A said that both of A and B are knights.

B said that A is a knave.

Note that the knights always speak true and the knaves always lie.

The objective is to find what are A and B.

For this observe that the statement of A cannot be true because if statement of A is true then B would be a knight and thus contradict their own statement.

So, A must be knave and thus the statement of B is true. That is, B is a knight.

Hence **this can be concluded that A is a knave and B is a knight.**

Step 3 of 7

(b)

In an island there is another two natives' C and D, only C addressed as follows:

C said that both of C and D are knaves.

The objective is to find what are C and D.

For this note that if C is a knight then the statement provided by C is true and that makes that C is a knave and would leads to a contradiction. Also, D cannot be a knave otherwise this would make $C's$ statement true.so, D must be a Knight.

Hence **this can be concluded that C is a knave and D is a Knight.**

Step 4 of 7

(c)

In an island there is another two native E and F addressed as follows:

E said that F is a knave.

F said that E is a knave.

The objective is to find the number of knaves in that island.

Note that there could be zero, one or two knaves.

If there are zero Knaves, that means there are two knights which is not possible since both the statement of E and F have to be true but in such case, they would contradict their own statements. Since two knaves are impossible by the same reason as above.

Next consider that if both E and F are knaves then this will make both their statement true and makes both of them as knights. This shows that there is exactly one knave but due to lack of information it is impossible to determine which one.

Step 5 of 7

(d)

Consider that there is a group of six natives U, V, W, X, Y and Z who addressed as follows:

U said that none of us is a knight.

V said that at least three of us are knights.

W said that at most three of us are knights

X said that exactly five of us are knights.

Y said that exactly two of us are knights.

Z said that exactly one of us is a knight.

Step 6 of 7

The objective is to determine which are knights and which are knaves.

Note that the statement of U cannot be true, because if it is true then U would be a knight, and at the same time U would be a knave, since there are no knights. Thus, U is a knave. Next assume that the statement of X is true then this would imply that everyone except U, is a knight.

But then the statements of Y and Z becomes false, and that cannot be, since they are both knights. So, this determine that X is also a knave. Moreover, the statements of V and W are either both true, or at least one of them is true. That means that either V, or W, or both are knights.

Step 7 of 7

Then this would imply that Z cannot be a knight since, if Z is a knight, then there will be at least two knights, Z and at least one of V and W, this contradict the $Z's$ statement.

Therefore, Z is a knave. Now, already there are three knaves: U, X and Z.

Therefore, there could be at most three knights. This is exactly what W says, and that makes W a knight. Next note that V cannot be a knight because if, V is a knight, then that would imply there are exactly three knights: V, W and Y. However, Y says there are exactly two knights - a contradiction. Therefore, V is also a knave.

Moreover, **both Y and W are knights, since their statements are both true.**

Chapter 2.3, Problem 39E

Problem

The famous detective Percule Hoirot was called in to solve a baffling murder mystery. He determined the following facts:

a. Lord Hazelton, the murdered man, was killed by a blow on the head with a brass candlestick.

b. Either Lady Hazelton or a maid, Sara, was in the dining room at the time of the murder.

c. If the cook was in the kitchen at the time of the murder, then the butler killed Lord Hazelton with a fatal dose of strychnine.

d. If Lady Hazelton was in the dining room at the time of the murder, then the chauffeur killed Lord Hazelton.

e. If the cook was not in the kitchen at the time of the murder, then Sara was not in the dining room when the murder was committed.

f. If Sara was in the dining room at the time the murder was committed, then the wine steward killed Lord Hazelton.

Is it possible for the detective to deduce the identity of the murderer from these facts? If so, who did murder Lord Hazelton? (Assume there was only one cause of death.)

Step-by-step solution

Step 1 of 5

Assign the statements with the variables as follows:

A: Lord H, the murdered man, was killed by a blow on the head with a brass candlestick.B: Lady H was in the dining room at the time of murder.C: The maid, S was in the dining room at the time of murder.D: The cook was in the kitchen at the time of murder.E: The butler killed Lord H with a fatal dose of strychnine.F: The wine steward killed Lord H.G: The chauffeur killed Lord H.

Step 2 of 5

Separate the statements into different propositions.

From part C of the question and by Modus Tollens

$$D \to E$$
$$\sim E$$
$$\therefore \sim D$$

If the cook was in the kitchen at the time of the murder, then the butler killed Lord H with a fatal dose of StrychineTherefore, Lord Hazelton was not killed with a fatal dose of Strychine, he was killed with a blow to the head.Therefore, the butler did not kill Lord H.Therefore, the cook was not in the kitchen at the time of the murder.

Step 3 of 5

2)

From part E of the question, from 1) and Modus Ponens

$$\sim D \to \sim C$$
$$\sim D$$
$$\therefore \sim C$$

If the cook was not in the kitchen at the time of the murder the, the maid Sara was not in the dining room at the time of murder. Therefore, the cook was not in the kitchen at the time of the murder. Therefore, the maid Sara was not in the dining room at the time of the murder.

Step 4 of 5

3)

From part b of the question, from 2) and by Elimination

$$B \vee C$$
$$\sim C$$
$$\therefore B$$

Either Lady H or a maid, S, was in the dining room at the time of murder.Therefore, Sara was not in the dining room at the time of the murder. Therefore, Lady H was in the room at the time of murder.

Step 5 of 5

4)

From part D of the question, from 3), and from Modus Ponens

$$B \to G$$
$$B$$
$$\therefore G$$

If Lady Hazelton was in the dining room at the time of murder, then the chauffeur killed Lord Hazelton.Therefore, Lady H was in the dining room at the time of murder.Therefore, the chauffeur killed Lord H.

Chapter 2.3, Problem 40E

Problem

Sharky, a leader of the underworld, was killed by one of his own band of four henchmen. Detective Sharp interviewed the men and determined that all were lying except for one. He deduced who killed Sharky on the basis of the following statements:

a. Socko: Lefty killed Sharky.

---

b. Fats: Muscles didn't kill Sharky.

---

c. Lefty: Muscles was shooting craps with Socko when Sharky was knocked off.

---

d. Muscles: Lefty didn't kill Sharky.

Who did kill Sharky?

Step-by-step solution

Step 1 of 2

We know that only one of Socko, Fats, Lefty and Muscles is telling the truth.

Let Socko is telling the truth.

Then, Fats statement also becomes true.

Thus, **Socko is lying**.

Hence, **Lefty didn't kill Sharky**.

Step 2 of 2

Since Muscles also says that Lefty didn't kill Sharky, thus of all the four only **Muscles is telling the truth**.

Since only one of Socko, Lefty, Muscles and Fats is telling the truth and Muscles is telling truth, therefore **Fats is lying**.

Hence, **Muscles killed Sharky**.

Chapter 2.3, Problem 41E

Problem

A set of premises and a conclusion are given. Use the valid argument forms listed in Table to deduce the conclusion from the premises, giving a reason for each step as in Example . Assume all variables are statement variables.

Table

Valid Argument Forms

Modus Ponens	$p \to q$ p $\therefore q$	**Elimination**	**a.** $p \vee q$ $\sim q$ $\therefore p$ **b.** $p \vee q$ $\sim p$ $\therefore q$
Modus Tollens	$p \to q$ $\sim p$ $\therefore \sim q$	**Transitivity**	$p \to q$ $q \to r$ $\therefore p \to r$
Generalization	a.p $\therefore p \vee q$ b.q $\therefore p \vee q$	**Proof by Division into Cases**	$p \vee q$ $p \to r$ $q \to r$ $\therefore r$
Specialization	**a.** $p \wedge q$ $\therefore p$ **b.** $p \wedge q$ $\therefore q$		
Conjunction	p q $\therefore p \wedge q$	**Contradiction Rule**	$\wedge p \to c$ $\therefore p$

Example

Application: A More Complex Deduction

You are about to leave for school in the morning and discover that you don't have your glasses. You know the following statements are true:

a. If I was reading the newspaper in the kitchen, then my glasses are on the kitchen table.

b. If my glasses are on the kitchen table, then I saw them at breakfast.

c. I did not see my glasses at breakfast.

d. I was reading the newspaper in the living room or I was reading the newspaper in the kitchen.

e. If I was reading the newspaper in the living room then my glasses are on the coffee table.

Where are the glasses?

Solution

Let RK = I was reading the newspaper in the kitchen.

GK = My glasses are on the kitchen table.

SB = I saw my glasses at breakfast.

RL = I was reading the newspaper in the living room.

GC = My glasses are on the coffee table.

Here is a sequence of steps you might use to reach the answer, together with the rules of inference that allow you to draw the conclusion of each step:

1. $RK \to GK$ by (a)

$GK \to SB$ by (b)

$\therefore RK \to SB$ by transitivity

2. $RK \to SB$ by the conclusion of (1)

$\sim SB$ by (c)

$\therefore \sim R$ by modus tollens

3. $RL \vee RK$ by (d)

$\sim RK$ by the conclusion of (2)

$\therefore RL$ by elimination

4. $RL \to GC$ by (e)

RL by the conclusion of (3)

$\therefore GC$ by modus ponens

Thus the glasses are on the coffee table.

a. $\sim p \vee q \to r$

b. $s \vee \sim q$

c. $\sim t$

d. $p \to t$

e. $\sim p \wedge r \to \sim s$

f. $\therefore \sim q$

Step-by-step solution

Step 1 of 4

The objective is to deduce the conclusion $\sim q$ form the following premises:

a. $\sim p \vee q \to r$
b. $s \vee \sim q$
c. $\sim t$
d. $p \to t$
e. $\sim p \wedge r \to \sim s$

Use suitable rules of inference to draw the conclusion.

Step Reason

1. $\sim t$ Premise (c)

2. $p \to t$ Premise (d)

Use Modus Tollens on steps **1** and **2.**

$p \to q$
$\sim q$
$\therefore \sim p$

Step Reason

3. $\sim p$ Modus Tollens on steps **1** and **2**

Step 2 of 4

Use generalization rule $p // \therefore p \vee q$ to step **3**.

Step Reason

4. $\sim p \vee q$ Rule of generalization on $\sim p$

5. $\sim p \vee q \to r$ Premise (a)

Use Modus Ponens on steps **4** and **5.**

$p \to q$
p
$\therefore q$

Step Reason

6. r Modus Ponens on steps **4** and **5**

Step 3 of 4

Use Conjunction $p, q // \therefore p \wedge q$ on steps **3** and **6.**

Step Reason

7. $\sim p \wedge r$ Conjunction on steps **3** and **6**

8. $\sim p \wedge r \to \sim s$ Premise (e)

Use Modus Ponens on steps **7** and **8.**

$p \to q$
p
$\therefore q$

Step Reason

9. $\sim s$ Modus Ponens on steps **7** and **8**

10. $s \vee \sim q$ Premise (b)

Step 4 of 4

Use Elimination $p \vee q, \sim q // \therefore p$ on steps **9** and **10.**

11. $\sim q$ By Elimination on steps **9** and **10**

Therefore, conclusion is $\boxed{\sim q}$.

Chapter 2.3, Problem 43E

Problem

A set of premises and a conclusion are given. Use the valid argument forms listed in Table to deduce the conclusion from the premises, giving a reason for each step as in Example . Assume all variables are statement variables.

Table

Valid Argument Forms

Modus Ponens	$p \to q$ p $\therefore q$	**Elimination**	**a.** $p \vee q$ $\sim q$ $\therefore p$ **b.** $p \vee q$ $\sim p$ $\therefore q$
Modus Tollens	$p \to q$ $\sim p$ $\therefore \sim q$	**Transitivity**	$p \to q$ $q \to r$ $\therefore p \to r$
Generalization	a.p $\therefore p \vee q$ b.q $\therefore p \vee q$	**Proof by Division into Cases**	$p \vee q$ $p \to r$ $q \to r$ $\therefore r$
Specialization	**a.** $p \wedge q$ $\therefore p$ **b.** $p \wedge q$ $\therefore q$		
Conjunction	p q $\therefore p \wedge q$	**Contradiction Rule**	$\wedge p \to c$ $\therefore p$

Example

Application: A More Complex Deduction

You are about to leave for school in the morning and discover that you don't have your glasses. You know the following statements are true:

a. If I was reading the newspaper in the kitchen, then my glasses are on the kitchen table.

b. If my glasses are on the kitchen table, then I saw them at breakfast.

c. I did not see my glasses at breakfast.

d. I was reading the newspaper in the living room or I was reading the newspaper in the kitchen.

e. If I was reading the newspaper in the living room then my glasses are on the coffee table.

Where are the glasses?

Solution

Let RK = I was reading the newspaper in the kitchen.

GK = My glasses are on the kitchen table.

SB = I saw my glasses at breakfast.

RL = I was reading the newspaper in the living room.

GC = My glasses are on the coffee table.

Here is a sequence of steps you might use to reach the answer, together with the rules of inference that allow you to draw the conclusion of each step:

1. $RK \to GK$ by (a)

$GK \to SB$ by (b)

$\therefore RK \to SB$ by transitivity

2. $RK \to SB$ by the conclusion of (1)

$\sim SB$ by (c)

$\therefore \sim R$ by modus tollens

3. $RL \vee RK$ by (d)

$\sim RK$ by the conclusion of (2)

$\therefore RL$ by elimination

4. $RL \to GC$ by (e)

RL by the conclusion of (3)

$\therefore GC$ by modus ponens

Thus the glasses are on the coffee table.

a. $\sim p \to r \wedge \sim s$

b. $t \to s$

c. $u \to \sim p$

d. $\sim w$

e. $u \vee w$

f. $\therefore \sim t$

Step-by-step solution

Step 1 of 3

555-1.3-43E SA: 5589

SR: 5892

$a. \sim p \to r \wedge \sim s$
$b. \quad t \to s$
$c. \quad u \to \sim p$
$d. \quad \sim w$
$e. \quad u \vee w$
$f. \quad \therefore \sim t$

To check the validity of this argument, we proceed as

$d. \sim w$
$e. \quad u \vee w$
$\therefore u ---(1)$ from elimination.

Step 2 of 3

$(1)\ c. \Rightarrow \sim p$ is true $---(2)$ from modus ponens

$(2),\ a. \Rightarrow r \wedge \sim s$ is true $---(3)$ from modus ponens

Step 3 of 3

$(3) \Rightarrow \therefore r\ , \therefore \sim s ---(4)$ from specialization

$(4), b. \Rightarrow \sim t$ is true.

$\therefore \sim t$ from modus tollens

So the conclusion f. is valid.

Chapter 2.4, Problem 1E

Problem

Give the output signals for the circuits in 1–4 if the input signals are as indicated.

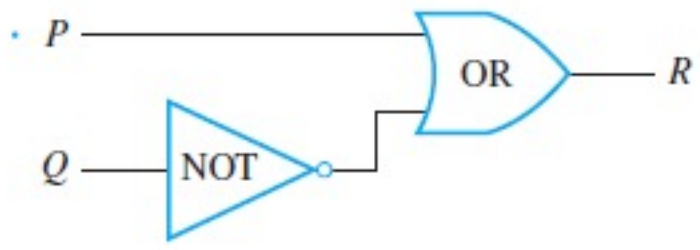

input signals: P =1 and Q = 1

Step-by-step solution

Step 1 of 2

We are given that $P = 1$ and $Q = 1$.

Input being 1, the output of NOT gate is 0.

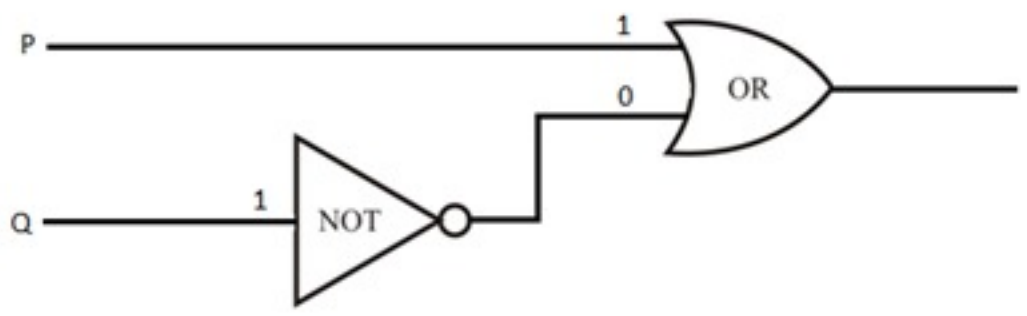

Step 2 of 2

Now, the input for OR gate are 0 and 1.

Thus, the output of OR gate, R is 1.

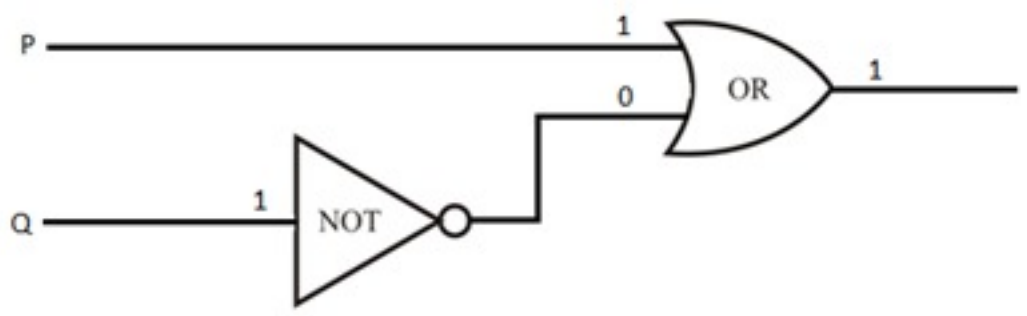

Chapter 2.4, Problem 2E

Problem

Give the output signals for the circuits in 1–4 if the input signals are as indicated.

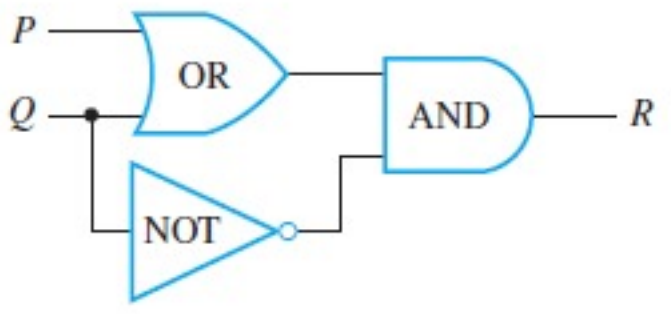

input signals: P =1 and Q = 0

Step-by-step solution

Step 1 of 5

The input signals of the circuit diagram are as indicated below:

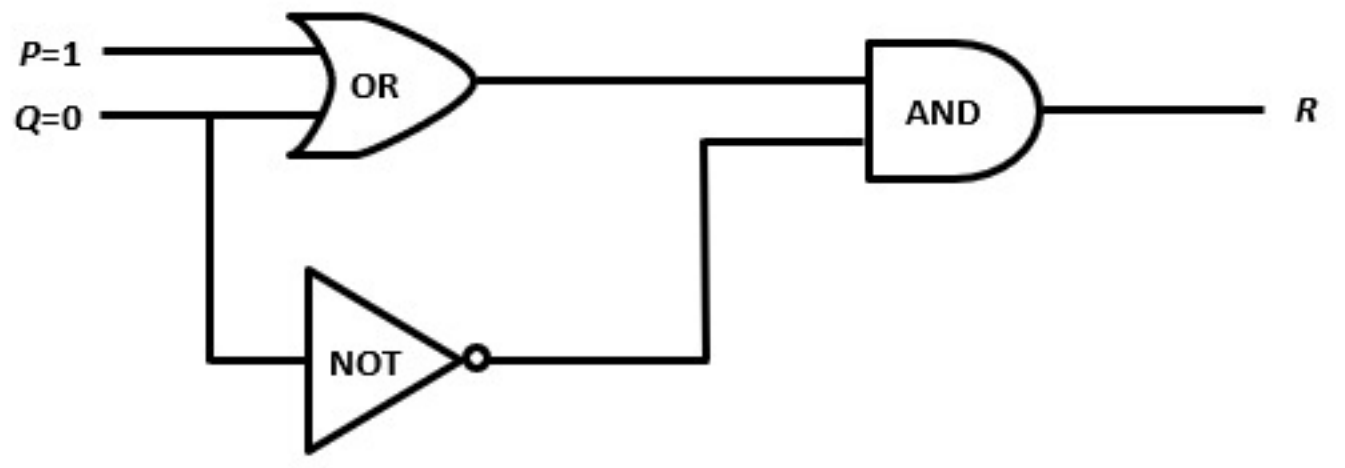

The objective is to find the output signal R for this circuit diagram.

Step 2 of 5

Move from left to right through the given diagram and trace the action of each gate on the input signals.

The first gate is the OR gate.

The following is the action of the OR gate:

Input		Output
P	Q	R_1
1	0	1

Input to the OR gate is $P=1$ and $Q=0$.

Hence, the output of the OR gate is $R_1=1$, which forms the input to the AND gate.

Step 3 of 5

The next gate is the NOT gate.

The following is the action of the NOT gate:

Input	Output
Q	R_2
0	1

Input to the NOT gate is $Q=0$.

Hence, the output of the NOT gate is $R_2=1$, which forms the second input to the AND gate.

Step 4 of 5

The circuit diagram with the input and outputs determined so far is as follows.

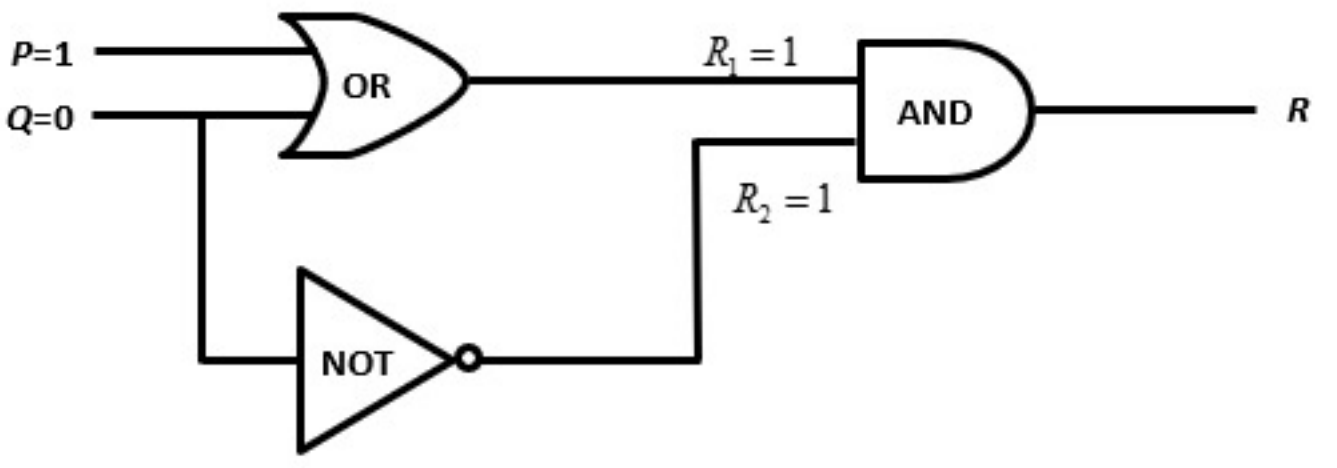

Step 5 of 5

The last gate is the AND gate.

The following is the action of the AND gate:

Input		Output
R_1	R_2	R
1	1	1

Input to the AND gate is $R_1=1$ and $R_2=1$.

Hence, the output of the AND gate is $\boxed{R=1}$.

Chapter 2.4, Problem 3E

Problem

Give the output signals for the circuits in 1–4 if the input signals are as indicated.

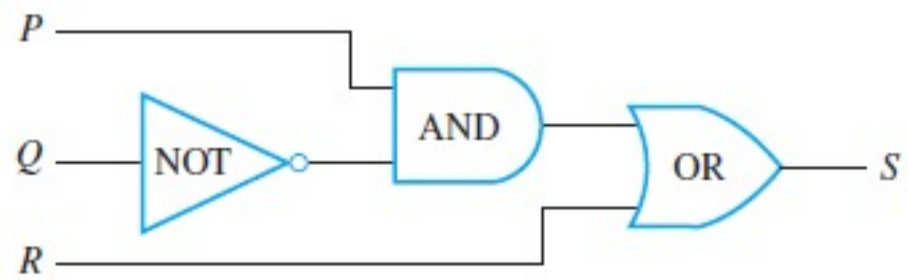

input signals: $P = 1$, $Q = 0$, $R = 0$

Step-by-step solution

Step 1 of 2

The input signals are $P = 1$, $Q = 0$, and $R = 0$.

This is illustrated by annotating the diagram shown below.

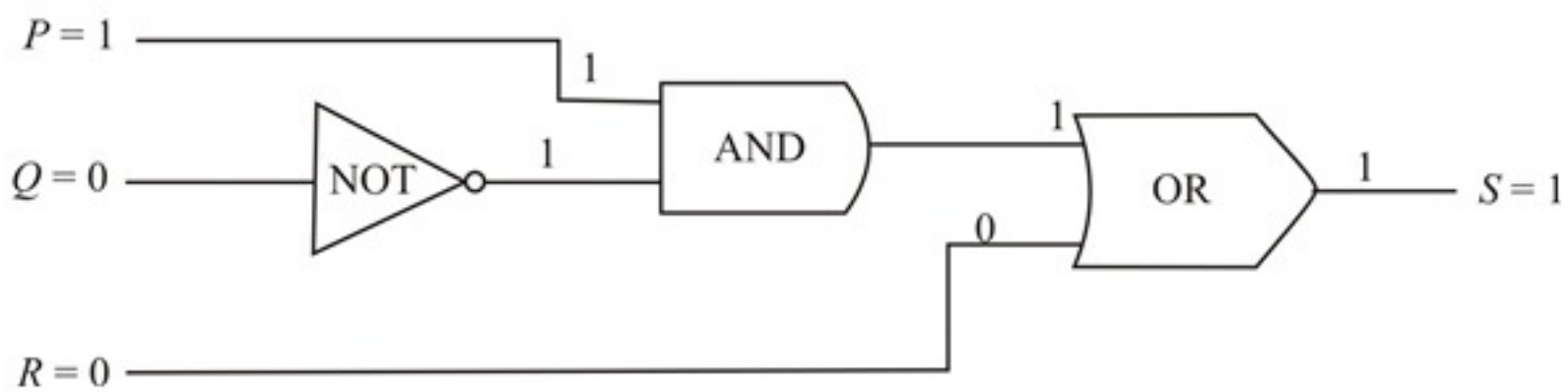

Step 2 of 2

$\therefore S = 1$

Thus, the output S is 1.

Chapter 2.4, Problem 4E

Problem

Give the output signals for the circuits in 1–4 if the input signals are as indicated.

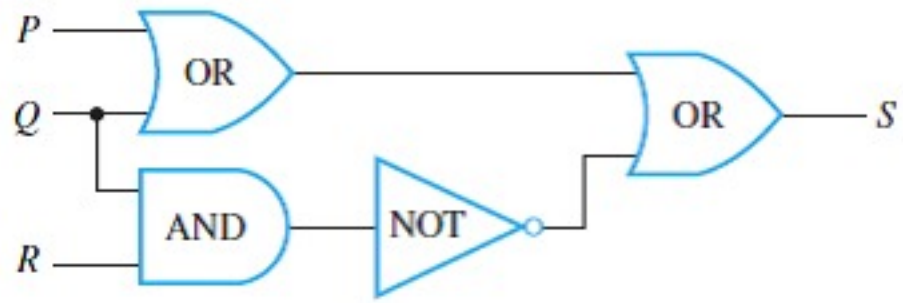

input signals: $P = 0$, $Q = 0$, $R = 0$

Step-by-step solution

Step 1 of 2

The input signals are $P = 0$, $Q = 0$, and $R = 0$.

This is illustrated by annotating the diagram shown below.

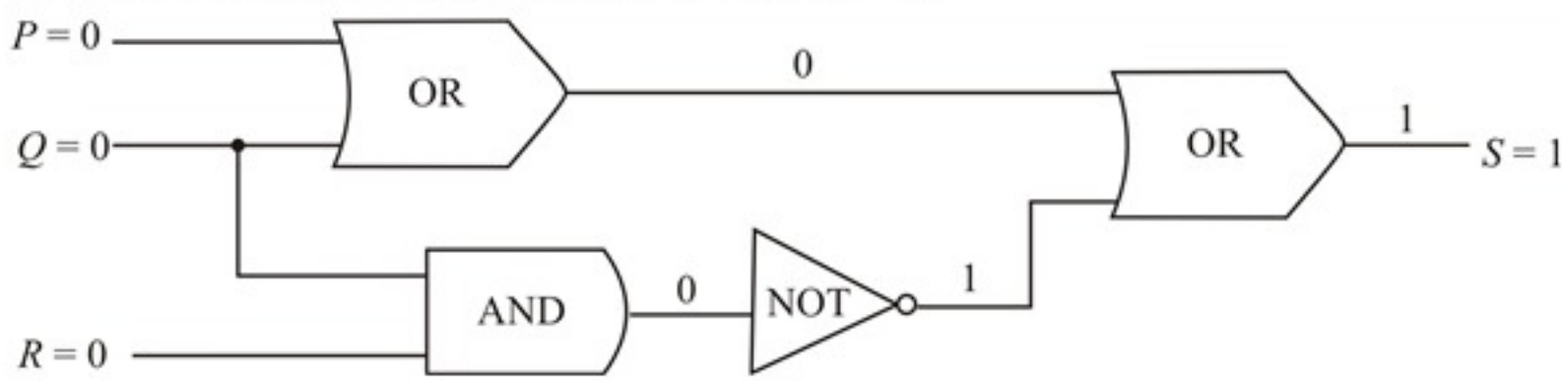

Step 2 of 2

$\therefore S = 1$

Thus, the output S is 1.

Chapter 2.4, Problem 5E

Problem

In 5–8, write an input/output table for the circuit in the referenced exercise.

Exercise 1

Reference:

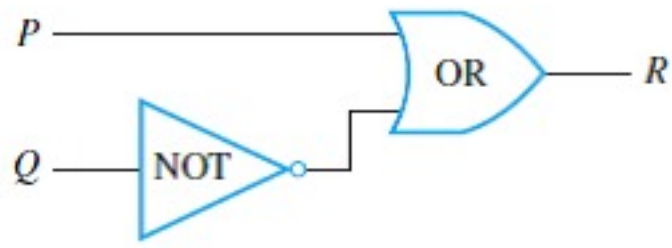

input signals: P =1 and Q = 1

Step-by-step solution

Step 1 of 3

To write input/output table, we first need to calculate output signals for the circuit.

If the input signals for the circuit in exercise 1 is:

$P = 1$ and $Q = 1$

Then output signal is $R = 1$. Because if Q passes through the "NOT" gate then it gives 0 and now if $P = 1$ and $Q = 0$ passes through "OR" gate, it gives the value 1.

Step 2 of 3

Similarly, the other output signals are:

$R = 1$ when $P = 1$ and $Q = 0$,

$R = 1$ when $P = 0$ and $Q = 1$,

$R = 1$ when $P = 0$ and $Q = 0$

Step 3 of 3

Now, input/output table is

P	Q	R
1	1	1
1	0	1
0	1	0
0	0	1

Chapter 2.4, Problem 6E

Problem

In 5–8, write an input/output table for the circuit in the referenced exercise.

Exercise 2

Reference:

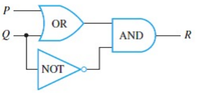

input signals: P =1 and Q = 0

Step-by-step solution

Step 1 of 4

The objective is to write an input/output table for the circuit:

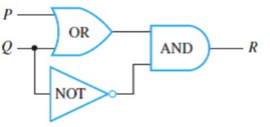

Let the input signals be $P = 1$ and $Q = 0$.

Note that the OR gate receives an input of 1 from P and an input of 0 from Q.

As at least one of the inputs is a 1, the OR gate will give output of 1.

Step 2 of 4

Note that the NOT gate receives an input of 0 from Q, and it gives an output of 1.

Finally, the AND gate receives an input of 1 from OR gate and 1 from NOT gate.

As both the inputs are 1, then AND gate will give an output 1 as well.

Thus, the output signal for R is $\boxed{1}$.

The circuit with signals is:

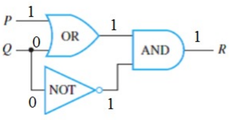

Step 3 of 4

Derive the output of each gate for every possible input of P and Q.

For P and Q there are 4 types of inputs:

P	Q
1	1
1	0
0	1
0	0

The output of OR gate is:

P	Q	OR gate
1	1	1
1	0	1
0	1	1
0	0	0

Step 4 of 4

The output of NOT gate is:

P	Q	OR gate	NOT gate
1	1	1	0
1	0	1	1
0	1	1	0
0	0	0	1

The output of AND gate is:

P	Q	OR gate	NOT gate	AND gate
1	1	1	0	0
1	0	1	1	1
0	1	1	0	0
0	0	0	1	0

The final input/output table for the circuit is:

P	Q	R
1	1	0 1 0 0
1	0	
0	1	
0	0	

Chapter 2.4, Problem 7E

Problem

In 5–8, write an input/output table for the circuit in the referenced exercise.

Exercise 3

Reference:

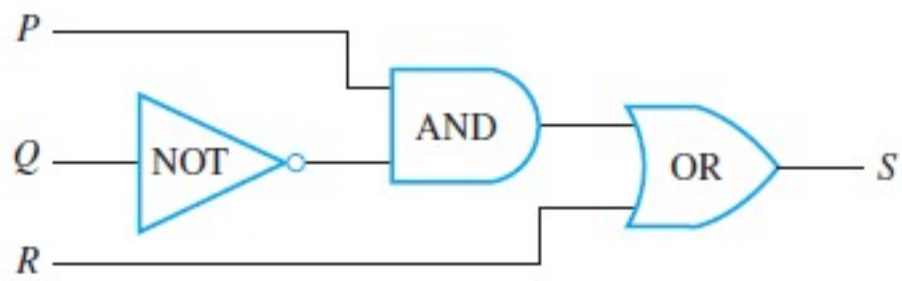

input signals: $P = 1$, $Q = 0$, $R = 0$

Step-by-step solution

Step 1 of 1

Let the output of AND gate be T.

Thus, input signals of OR gate with output signal S are T and R.

The input/output table for the circuit is as follows:

P	**Q**	**R**	$\sim Q$	$T = p \wedge \sim Q$	$S = T \vee R$
1	1	1	0	0	1
1	1	0	0	0	0
1	0	1	1	1	1
1	0	0	1	1	1
0	1	1	0	0	1
0	1	0	0	0	0
0	0	1	1	0	1
0	0	0	1	0	0

Chapter 2.4, Problem 8E

Problem

In 5–8, write an input/output table for the circuit in the referenced exercise.

Exercise 4

Reference:

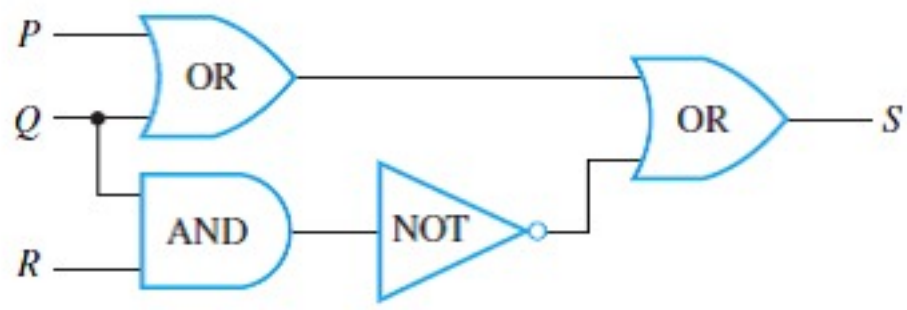

input signals: $P = 0$, $Q = 0$, $R = 0$

Step-by-step solution

Step 1 of 1

Let the output signal of OR gate with input signals P and Q be T and the output signal of AND gate with input signals Q and R be U.

Thus, the input signals for OR gate with output signal S are T and $\sim Q$.

The input/output table for the circuit is as follows:

P	Q	R	$T = P \vee Q$	$U = Q \wedge R$	$\sim U$	$S = T \vee \sim U$
1	1	1	1	1	0	1
1	1	0	1	0	1	1
1	0	1	1	0	1	1
1	0	0	1	0	1	1
0	1	1	1	1	0	1
0	1	0	1	0	1	1
0	0	1	0	0	1	1
0	0	0	0	0	1	1

Chapter 2.4, Problem 9E

Problem

In 9–12, find the Boolean expression that corresponds to the circuit in the referenced exercise.

Exercise 1

Reference:

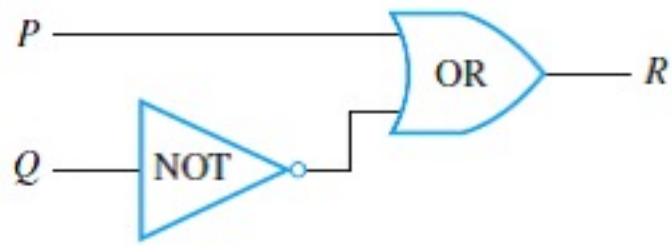

input signals: P =1 and Q = 1

Step-by-step solution

Step 1 of 1

The input signals of OR gate with output signal R are P and $\sim Q$.

The input/output table for the circuit is as follows:

		$\sim Q$	$R = P \vee \sim Q$
1	1	0	1
1	0	1	1
0	1	0	0
0	0	1	1

Thus the Boolean expression for the circuit is $R = P \vee \sim Q$.

Chapter 2.4, Problem 10E

Problem

In 9–12, find the Boolean expression that corresponds to the circuit in the referenced exercise.

Exercise 2

Reference:

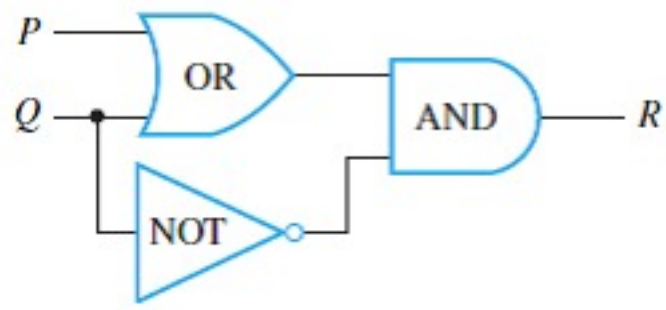

input signals: P =1 and Q = 0

Step-by-step solution

Step 1 of 2

Let the output of OR gate be S.

Thus, input signals for AND gate with output R are S and $\sim Q$.

The input/output table is as follows:

P	Q	$S = P \vee Q$	$\sim Q$	$R = S \wedge \sim Q$
1	0	1	1	1
1	1	1	0	0
0	0	0	1	0
0	1	1	0	0

Boolean expression for the circuit is $R = S \wedge \sim Q$.

Step 2 of 2

Substituting the value of $S = P \vee Q$ in the above equation, we get

$R = (P \vee Q) \wedge \sim Q$.

Thus, the Boolean expression for the given circuit is $\boxed{R = (P \vee Q) \wedge \sim Q}$.

Chapter 2.4, Problem 11E

Problem

In 9–12, find the Boolean expression that corresponds to the circuit in the referenced exercise.

Exercise 3

Reference:

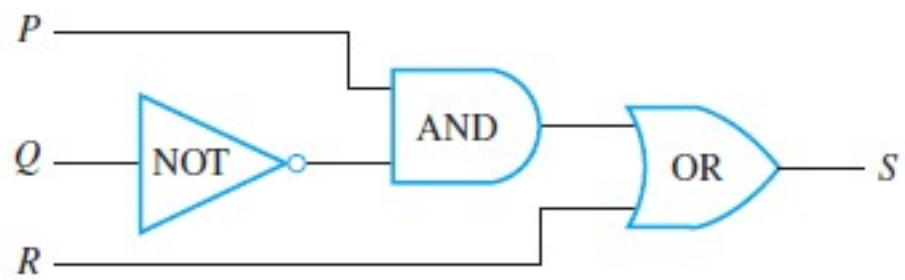

input signals: $P = 1$, $Q = 0$, $R = 0$

Step-by-step solution

Step 1 of 2

The Boolean expression corresponding to the circuit is $(P \wedge \square Q) \vee R$, as shown below.

Step 2 of 2

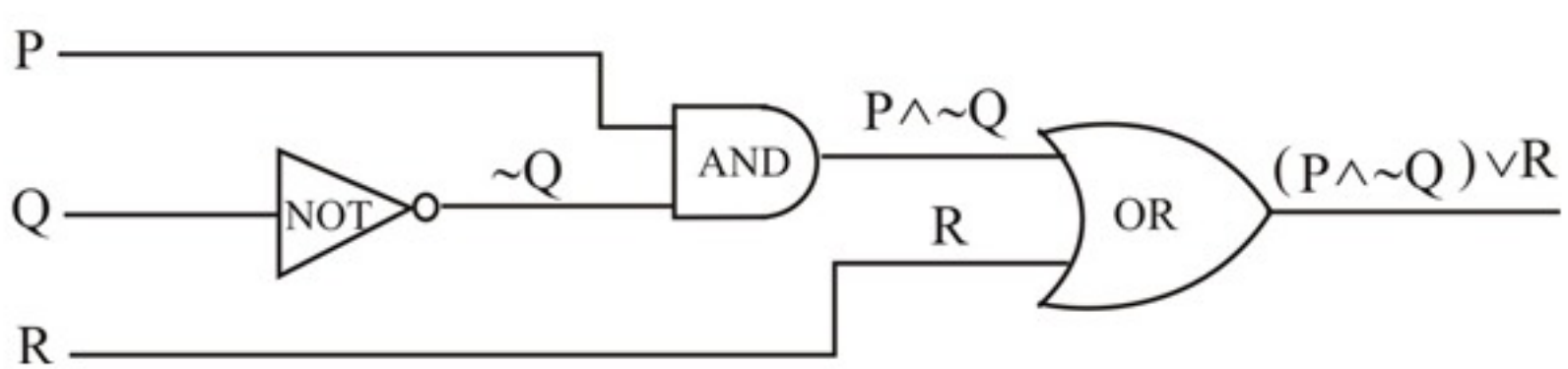

Chapter 2.4, Problem 12E

Problem

In 9–12, find the Boolean expression that corresponds to the circuit in the referenced exercise.

Exercise 4

Reference:

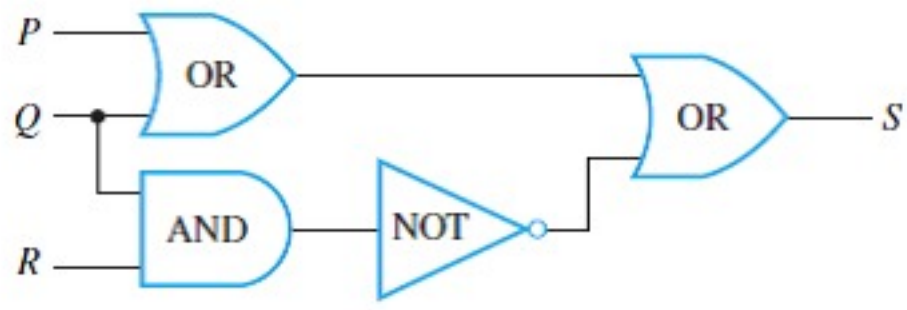

input signals: $P = 0$, $Q = 0$, $R = 0$

Step-by-step solution

Step 1 of 2

Let the output signal of OR gate with input signals P and Q be T and the output signal of AND gate with input signals Q and R be U.

Thus, $T = (P \vee Q)$ and $U = (Q \wedge R)$.

Now, the input signals for OR gate with output signal S are T and $\sim Q$.

Thus, $S = (T \vee \sim Q)$.

The input/output table for the circuit is as follows:

P	Q	R	$T = (P \vee Q)$	$U = (Q \wedge R)$	$\sim U$	$S = (T \vee \sim U)$
1	1	1	1	1	0	1
1	1	0	1	0	1	1
1	0	1	1	0	1	1
1	0	0	1	0	1	1
0	1	1	1	1	0	1
0	1	0	1	0	1	1
0	0	1	0	0	1	1
0	0	0	0	0	1	1

Boolean expression for the circuit is $S = (T \vee \sim U)$.

Step 2 of 2

Substituting the value of T and U in the above equation, we get

$S = (P \vee Q) \vee \sim (Q \wedge R)$.

Thus, the Boolean expression for the given circuit is $\boxed{S = (P \vee Q) \vee \sim (Q \wedge R)}$.

Chapter 2.4, Problem 13E

Problem

Construct circuits for the Boolean expressions in 13–17.

$\sim P \vee Q$

Step-by-step solution

Step 1 of 2

Write the input variables in a column on the left side of the diagram. Then, go from the right side of the diagram to the left.

As the last operation demonstrated when evaluating $\square P \vee Q$ is $\vee$, put an OR gate at the extreme right of the diagram.

Since one input to the OR gate is $\square P$, draw a line from P to the NOT gate, and from there to the OR gate.

The circuit you obtain is shown below.

Step 2 of 2

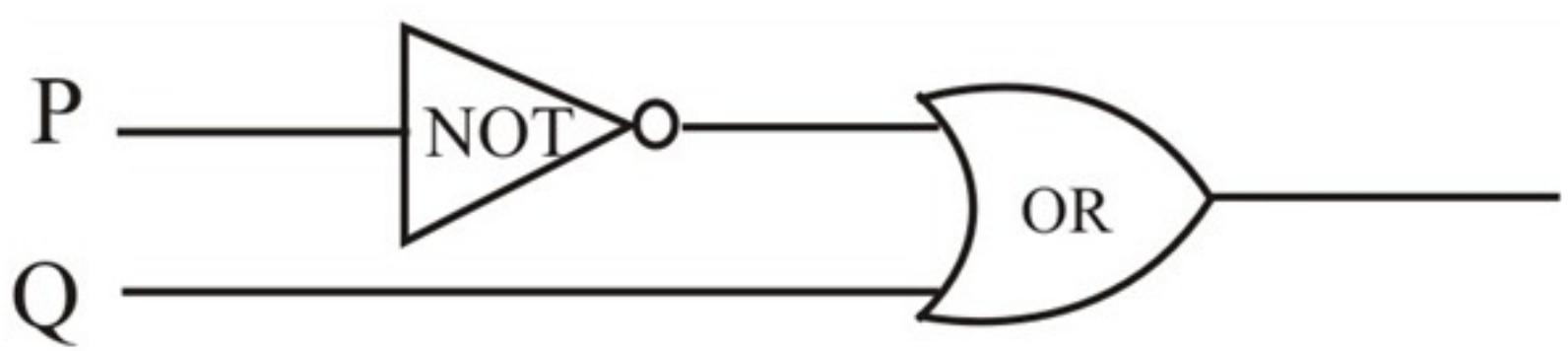

Chapter 2.4, Problem 14E

Problem

Construct circuits for the Boolean expressions in 13–17.

~(P ∨ Q)

Step-by-step solution

Step 1 of 2

$\square(P \vee Q)$ is equivalent to $\square P \wedge \square Q$.

Write the input variable in a column on the left side of the diagram. Then, go from the right side of the diagram to the left.

As the last operation demonstrated when evaluating $\square P \wedge \square Q$ is $\wedge$, put an AND gate at the extreme right of the diagram.

Since the inputs to the AND gate are $\square P$ and $\square Q$, draw a line from *P* and *Q* to a NOT gate, and from there to the AND gate.

The circuit you obtain is shown below.

Step 2 of 2

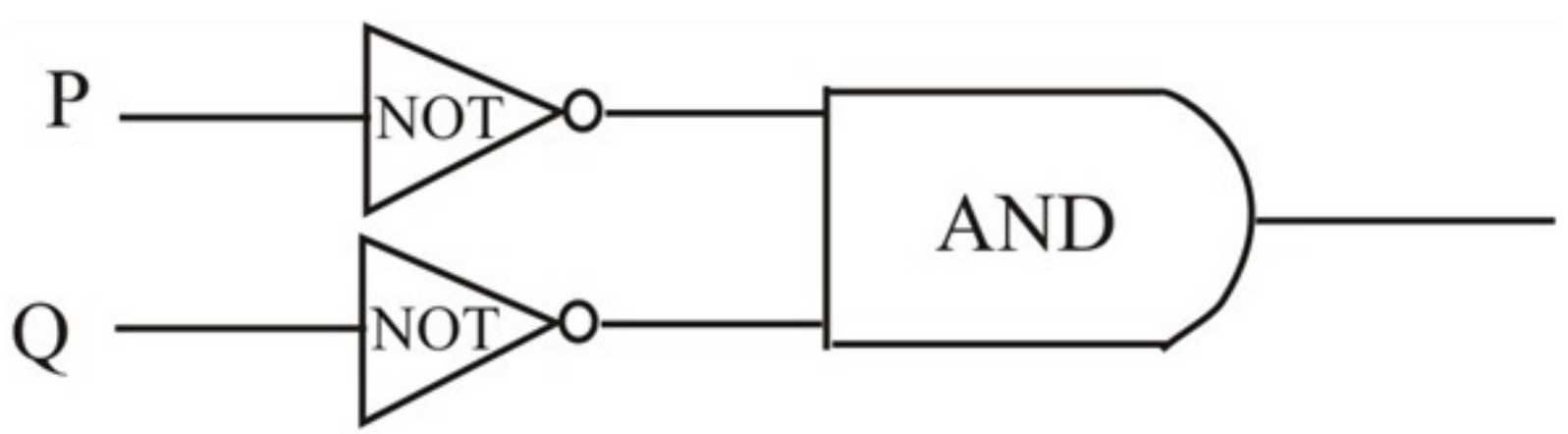

Chapter 2.4, Problem 15E

Problem

Construct circuits for the Boolean expressions in 13–17.

$P \vee (\sim P \wedge \sim Q)$

Step-by-step solution

Step 1 of 2

Write the input variables in a column on the left side of the diagram. Then, go from the right side of the diagram to the left.

As the last operation demonstrated when evaluating $P \vee (\square P \wedge \square Q)$ is $\vee$, put an OR gate at the extreme right of the diagram.

Since the inputs to the AND gate are $\square P$ and $\square Q$, draw a line from *P* and *Q* to a NOT gate and from there to the AND gate. The other input to the OR gate is *P*, draw a line from *P* directly to the OR gate.

The circuit you obtain is shown below.

Step 2 of 2

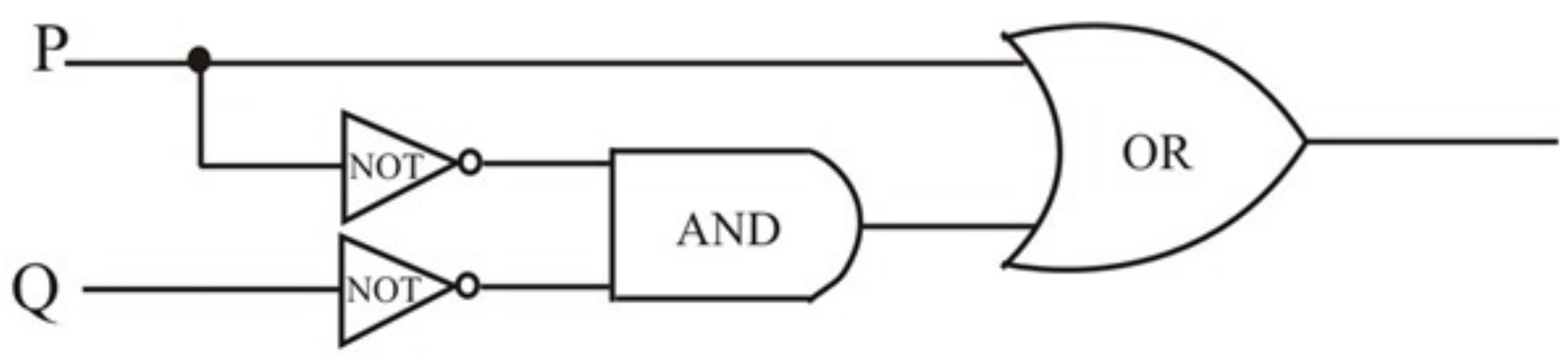

Chapter 2.4, Problem 16E

Problem

Construct circuits for the Boolean expressions in 13–17.

$(P \wedge Q) \vee \sim R$

Step-by-step solution

Step 1 of 6

The Boolean expression is $(P \wedge Q) \vee \square R$.

The objective is to draw a circuit diagram for this expression.

The Boolean expression consists of three variables *P*, *Q* and *R*.

Write these input variables in a straight line along a column on the left side of the diagram.

Start drawing the diagram from right to the left, starting from the outermost part of the expression to the innermost part.

Step 2 of 6

The last operation executed to evaluate this expression is $\vee$. Hence, put an OR-gate at the extreme right of the diagram as shown below.

Step 3 of 6

Step 4 of 6

The inputs to this OR-gate are $(P \wedge Q)$ and $\square R$.

The first input is $(P \wedge Q)$ which requires an AND-gate. So draw an AND-gate to the left of the OR-gate and show its output coming into the OR-gate.

Step 5 of 6

The inputs to this AND-gate are *P* and *Q*. So, draw a line from *P* and *Q* directly to the AND-gate.

Step 6 of 6

The second input to the OR-gate is $\square R$. So draw a line from *R* to a NOT-gate and from the NOT-gate to the OR-gate. The following is the complete circuit of the given expression.

Chapter 2.4, Problem 17E

Problem

Construct circuits for the Boolean expressions in 13–17.

(P ∧ ~Q) ∨ (~P ∧ R)

Step-by-step solution

Step 1 of 2

To construct this circuit, when evaluating $(P \wedge \square Q) \vee (\square P \wedge R)$, we have an $\vee$, so put an OR gate at the extreme right of the diagram. One input of the gate is $P \wedge \square Q$, so draw an AND gate to the left of the OR gate. Since one input to the AND gate is $\square Q$, draw a line from *Q* to the NOT gate and from there to the AND gate.

Since the other input to the OR gate is $\square P \wedge R$, draw an AND gate to the left of the OR gate and show its output coming into the OR gate. Since one input to the AND gate is $\square P$, draw a line from *P* to a NOT gate and from there to the AND gate.

The circuit you obtain is shown below.

Step 2 of 2

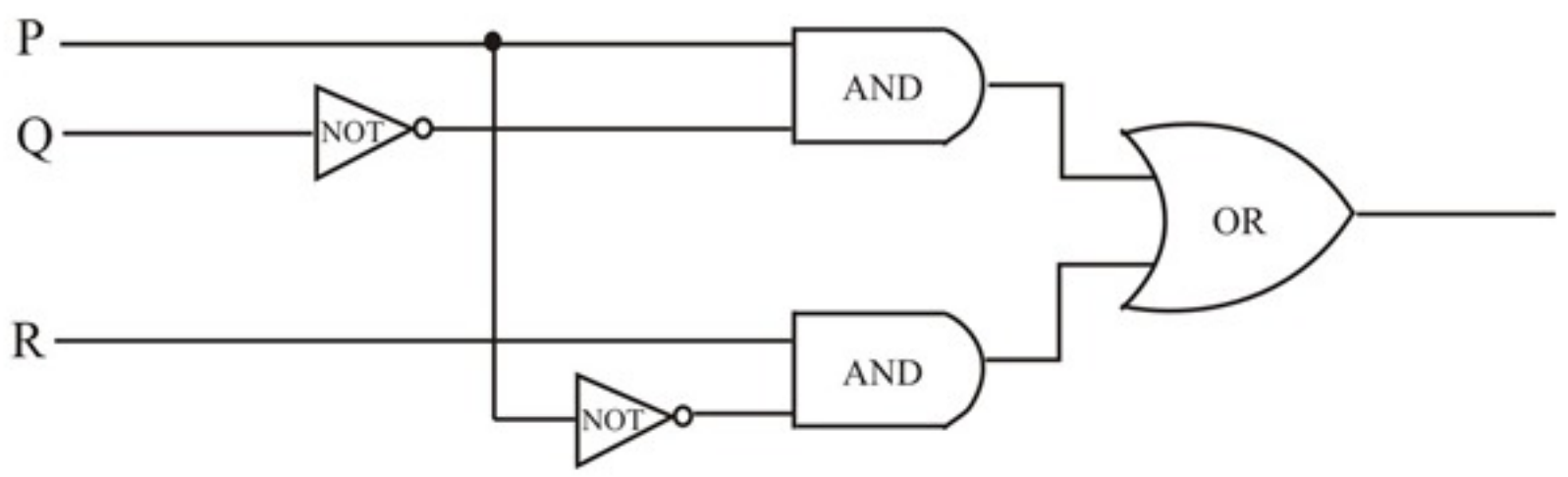

Chapter 2.4, Problem 18E

Problem

For each of the tables in 18–21, construct (a) a Boolean expression having the given table as its truth table and (b) a circuit having the given table as its input/output table.

P	Q	R	S
1	1	1	0
1	1	0	1
1	0	1	0
1	0	0	0
0	1	1	1
0	1	0	0
0	0	1	0
0	0	0	0

Step-by-step solution

Step 1 of 3

a)

To construct the Boolean expression, first observe the output signals. For each row with output signal 1 we write a corresponding boolean expression using AND gate such that the output is 1 for the signal corresponding to row and 0 for any other combination of signals.

P	Q	R	S
1	1	1	0
1	1	0	1
1	0	1	0
1	0	0	0
0	1	1	1
0	1	0	0
0	0	1	0
0	0	0	0

In the given table, second and fifth row have the output signal 1.

Boolean expression for second row is $P \wedge Q \wedge \sim R$.

Boolean expression for fifth row is $\sim P \wedge Q \wedge R$.

Step 2 of 3

Now, the output for any combination of signals is given by either of the two expressions.

Thus, the Boolean expression for the truth table is given by

$$\boxed{S = (P \wedge Q \wedge \sim R) \vee (\sim P \wedge Q \wedge R)}$$

Step 3 of 3

b)

The sketch of the circuit having the table as input/output table is as follows:

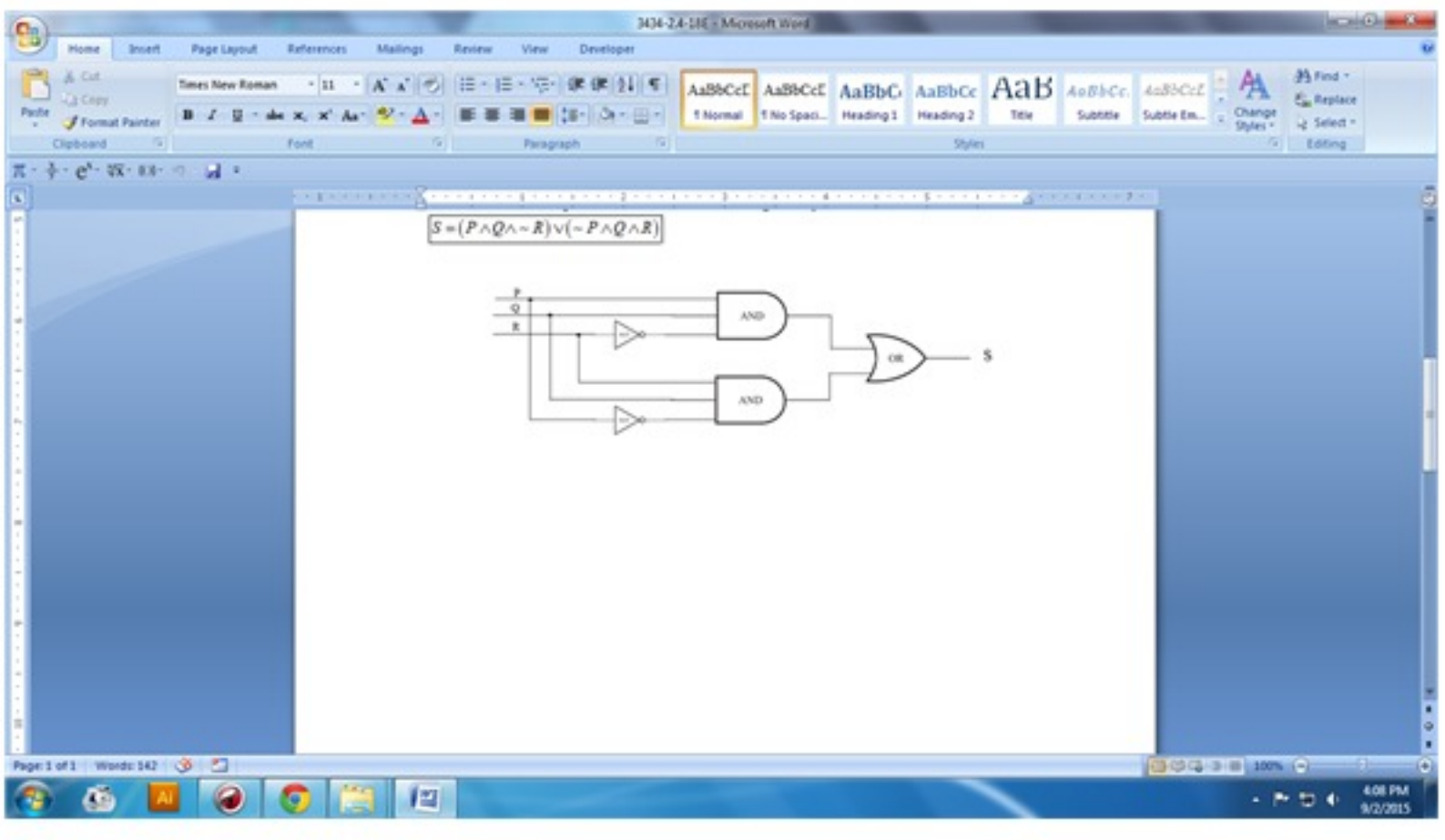

Chapter 2.4, Problem 19E

Problem

For each of the tables in 18–21, construct (a) a Boolean expression having the given table as its truth table and (b) a circuit having the given table as its input/output table.

P	*Q*	*R*	*S*
1	1	1	0
1	1	0	1
1	0	1	0
1	0	0	1
0	1	1	0
0	1	0	1
0	0	1	0
0	0	0	0

Step-by-step solution

Step 1 of 3

a)

To construct the Boolean expression, first observe the output signals. For each row with output signal 1 we write a corresponding boolean expression using AND gate such that the output is 1 for the signal corresponding to row and 0 for any other combination of signals.

P	*Q*	*R*	*S*
1	1	1	0
1	1	0	1
1	0	1	0
1	0	0	1
0	1	1	0
0	1	0	1
0	0	1	0
0	0	0	0

In the given table, second fourth and sixth row have the output signal 1.

Boolean expression for second row is $P \wedge Q \wedge \sim R$.

Boolean expression for fourth row is $P \wedge \sim Q \wedge \sim R$.

Boolean expression for sixth row is $\sim P \wedge Q \wedge \sim R$.

Step 2 of 3

Now, the output for any combination of signals is given by either of the three expressions.

Thus, the Boolean expression for the truth table is given by

$$\boxed{S = (P \wedge Q \wedge \sim R) \vee (P \wedge \sim Q \wedge \sim R) \vee (\sim P \wedge Q \wedge \sim R)}.$$

Step 3 of 3

b)

The sketch of the circuit having the table as input/output table is as follows:

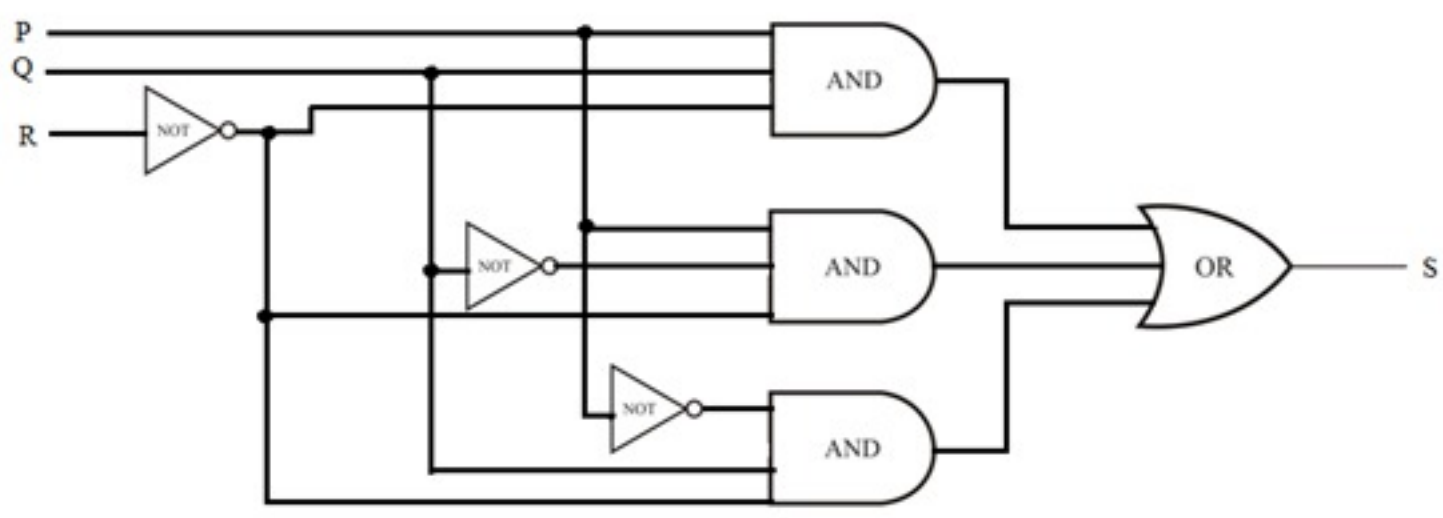

Chapter 2.4, Problem 20E

Problem

For each of the tables in 18–21, construct (a) a Boolean expression having the given table as its truth table and (b) a circuit having the given table as its input/output table.

P	Q	R	S
1	1	1	1
1	1	0	0
1	0	1	1
1	0	0	0
0	1	1	0
0	1	0	0
0	0	1	0
0	0	0	1

Step-by-step solution

Step 1 of 4

Consider the truth table

P	Q	R	S
1	1	1	1
1	1	0	0
1	0	1	1
1	0	0	0
0	1	1	0
0	1	1	0
0	0	1	0
0	0	0	1

Step 2 of 4

(a)

To construct a Boolean expression with this table as its truth table.

To do this, identify each row for which the output is 1 – in this case, the first, third, and eighth rows.

For each such row, construct an AND expression that produces a 1 (or true) for the exact combination of input values for that row, and a 0 (or false) for all other combinations of input values.

Step 3 of 4

The expression for the first row is $P \wedge Q \wedge R$ because $P \wedge Q \wedge R$ is 1 if $P = 1$ and $Q = 1$ and $R = 0$, and it is 0 for all other values of *P*, *Q*, and *R*.

Similarly, the expression for the third row is $P \wedge \sim Q \wedge R$, and the expression for the eighth row is $\sim P \wedge \sim Q \wedge \sim R$.

Now, any Boolean expression with the given table as its truth table has a value of 1 in the case of $P \wedge Q \wedge R$, or in the case of $P \wedge \sim Q \wedge R$, or in the case of $\sim P \wedge \sim Q \wedge \sim R$, and not in other cases.

It follows that a Boolean expression with the truth table is

$$\boxed{(P \wedge Q \wedge R) \vee (P \wedge \sim Q \wedge R) \vee (\sim P \wedge \sim Q \wedge \sim R)}$$

Step 4 of 4

(b)

Consider the expression

$$(P \wedge Q \wedge R) \vee (P \wedge \sim Q \wedge R) \vee (\sim P \wedge \sim Q \wedge \sim R)$$

This circuit corresponding to this expression has the diagram shown below

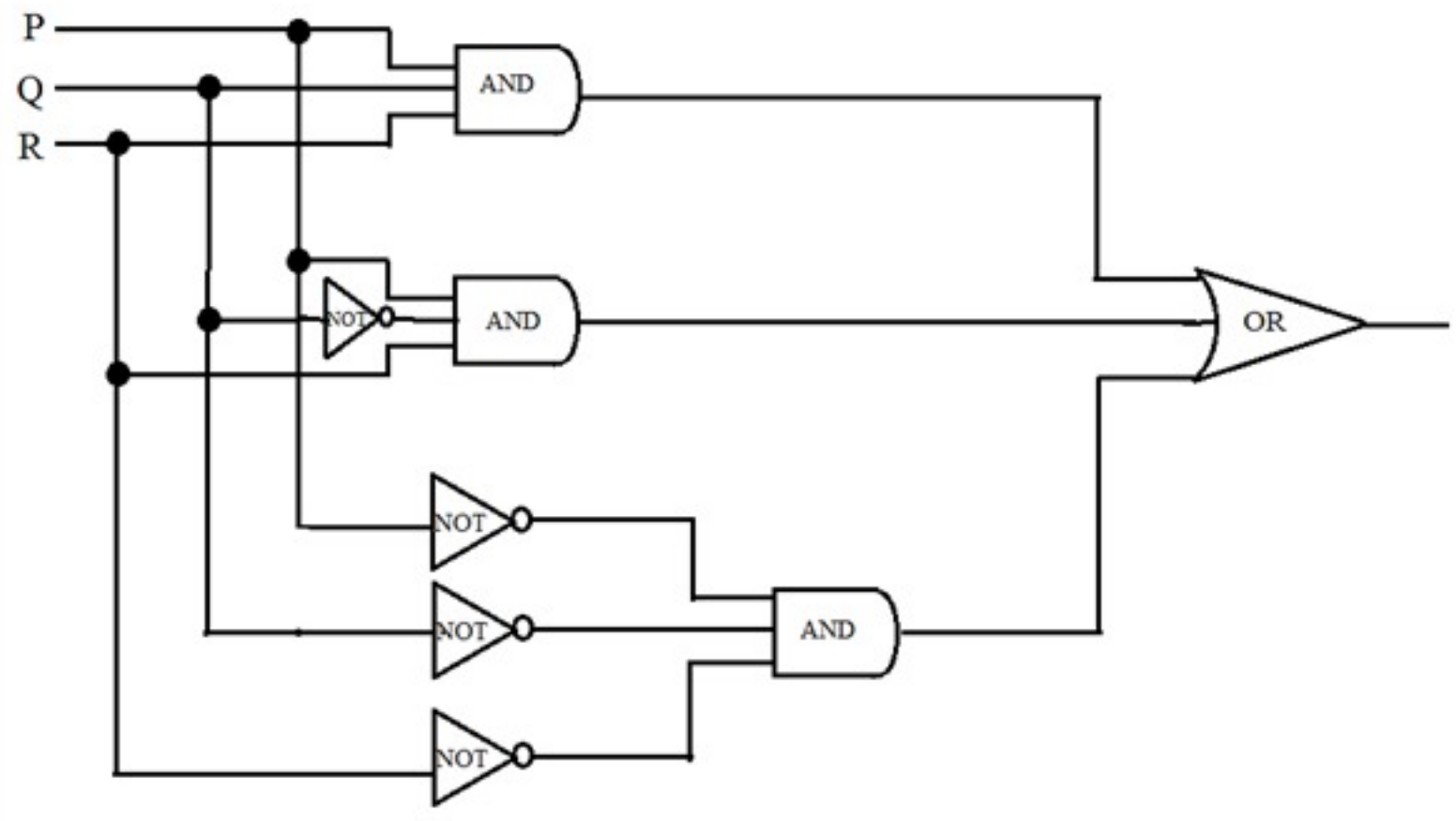

Chapter 2.4, Problem 21E

Problem

For each of the tables in 18–21, construct (a) a Boolean expression having the given table as its truth table and (b) a circuit having the given table as its input/output table.

P	Q	R	S
1	1	1	0
1	1	0	1
1	0	1	0
1	0	0	0
0	1	1	1
0	1	0	1
0	0	1	0
0	0	0	0

Step-by-step solution

Step 1 of 2

(a) We construct a Boolean expression with this table as its truth table. To do this, identify each row for which the output is 1, in this case, the second, fifth, and sixth rows.

For each such row, construct an AND expression that produces a 1 (or true) for the exact combination of input values for that row, and a 0 (or false) for all other combinations of input values.

For example, the expression for the second row is $P \wedge Q \wedge \square R$ because $P \wedge Q \wedge \square R$ is 1 if $P = 1$ and $Q = 1$ and $R = 0$, and it is 0 for all other values of *P*, *Q*, and *R*.

Similarly, the expression for the fifth row is $\square P \wedge Q \wedge R$ and the expression for the sixth row is $\square P \wedge Q \wedge \square R$.

Now, any Boolean expression with the given table as its truth table has a value of 1 in the case of $P \wedge Q \wedge \square R$, or in the case of $\square P \wedge Q \wedge R$, or in the case of $\square P \wedge Q \wedge \square R$, and not in other cases.

It follows that a Boolean expression with the truth table is

$$(P \wedge Q \wedge \square R) \vee (\square P \wedge Q \wedge R) \vee (\square P \wedge Q \wedge \square R)$$

Step 2 of 2

(b) This circuit corresponding to this expression has the diagram shown below.

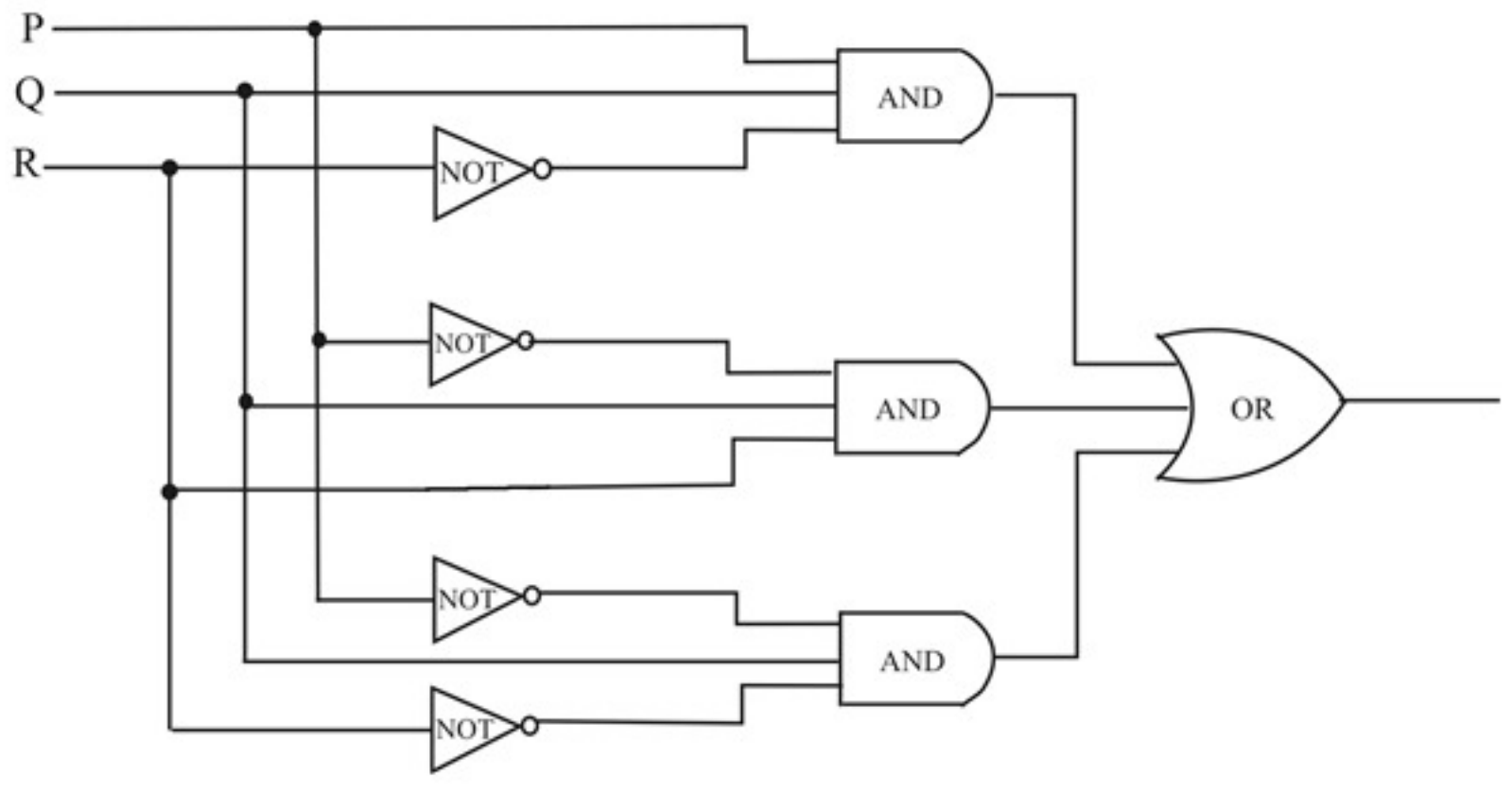

Chapter 2.4, Problem 22E

Problem

Design a circuit to take input signals *P*, *Q*, and *R* and output a 1 if, and only if, *P* and *Q* have the same value and *Q* and *R* have opposite values.

Step-by-step solution

Step 1 of 2

The result is that the output signal S is 1 if and only if $P = Q \neq R$. Thus, the truth table for the circuit is

P	*Q*	*R*	*S*
1	1	1	0
1	1	0	1
1	0	1	0
1	0	0	0
0	1	1	0
0	1	0	0
0	0	1	1
0	0	0	0

In the above table, only second and seventh row have the output signal 1.

Write the Boolean expression for each row with output signal 1.

Then the Boolean expressions for the circuit are written as follows:

Boolean expression for second row is $P \wedge Q \wedge \sim R$.

Boolean expression for sixth row is $\sim P \wedge \sim Q \wedge R$.

Step 2 of 2

Now, the output for any combination of signals is given by either of the two expressions.

Thus, the Boolean expression for the truth table is given by

$$\boxed{S = (P \wedge Q \wedge \sim R) \vee (\sim P \wedge \sim Q \wedge R)}$$

Hence, the circuit is

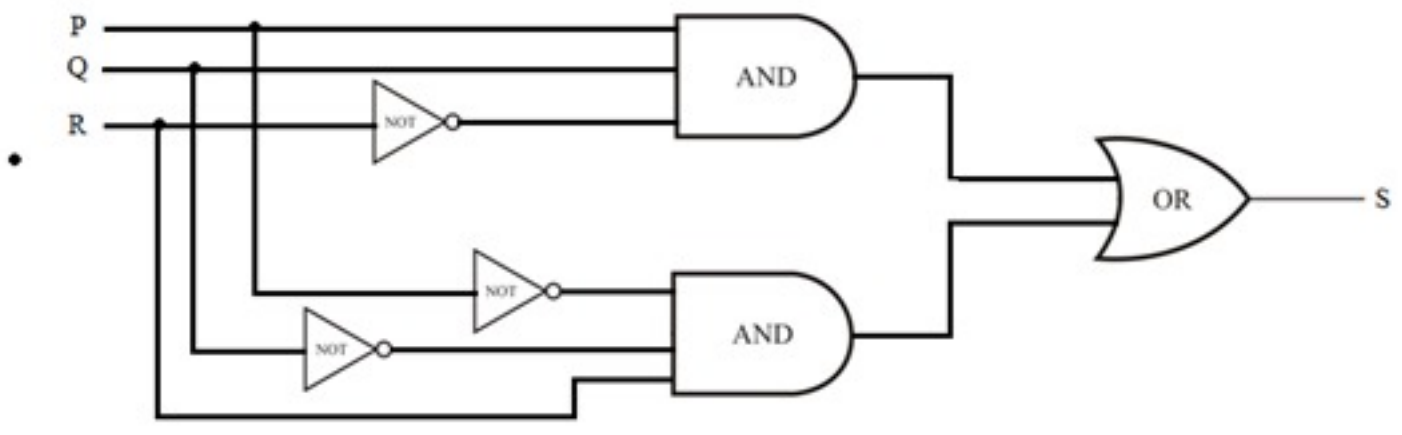

Chapter 2.4, Problem 23E

Problem

Design a circuit to take input signals *P*, *Q*, and *R* and output a 1 if, and only if, all three of *P*, *Q*, and *R* have the same value.

Step-by-step solution

Step 1 of 2

The input | output table is

Input	Output
P Q R	*S*
1 1 1	1
1 1 0	0
1 0 1	0
1 0 0	0
0 1 1	0
0 1 0	0
0 0 1	0
0 0 0	1

From the table, the Boolean expression is

$$(P \wedge Q \wedge R) \vee (\square P \wedge \square Q \wedge \square R)$$

Step 2 of 2

The input | output table with the circuit is

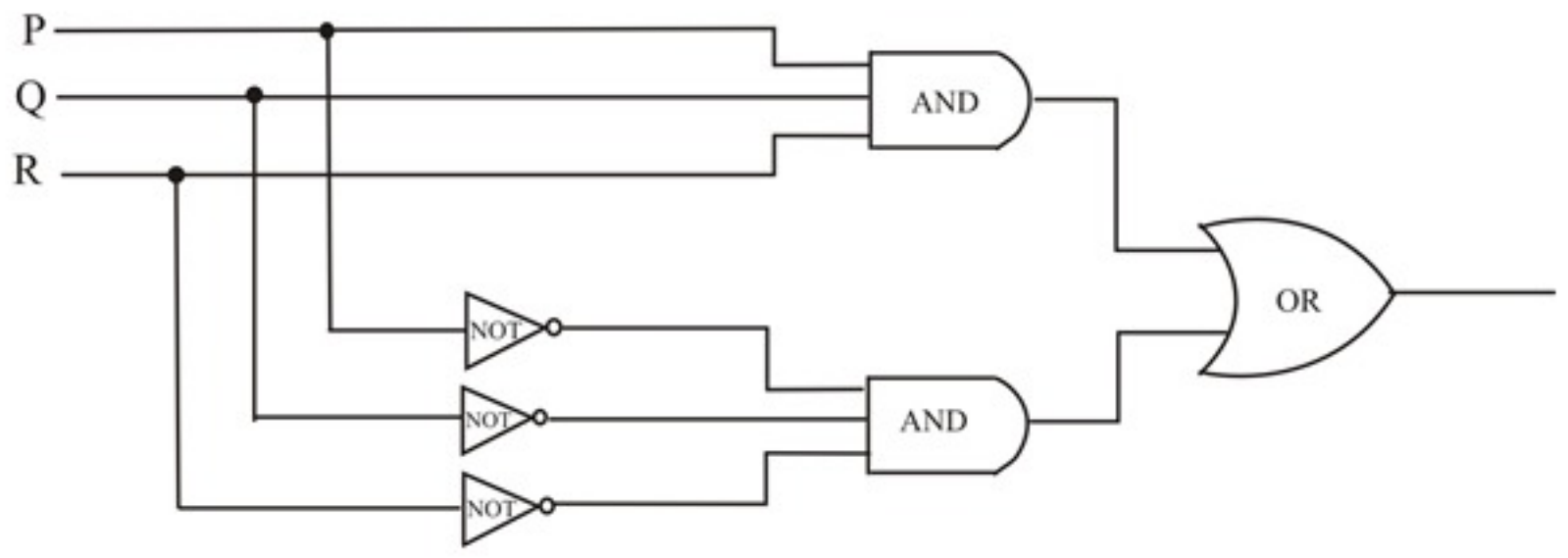

Chapter 2.4, Problem 24E

Problem

The lights in a classroom are controlled by two switches: one at the back and one at the front of the room. Moving either switch to the opposite position turns the lights off if they are on and on if they are off. Assume the lights have been installed so that when both switches are in the down position, the lights are off. Design a circuit to control the switches.

Step-by-step solution

Step 1 of 4

The objective of the problem is to design a circuit to control the switches if there are two switches to control the lights in a classroom, one at the back and other at the front of the room. The lights in the classroom are turned on or off depending upon the position of the switches.

Let the variables *P* and *Q* represent the position of the two switches respectively and let *R* be the lights. Let 0 represent that the switch is in the down position and 1 represent that the switch is in the up position.

Let $R=0$ represents that the lights are off and $R=1$ represents that the lights are on.

Step 2 of 4

If both the switches are in the down position, then the lights are off. That is, when $P=0$ and $Q=0$, then $R=0$.

Also, when both the switches are in the up position, the lights are off. That is, when $P=1$ and $Q=1$, then $R=0$.

Now, moving the switches to the opposite position turns the lights off if they are on and on if they are off. So, if the switch *P* is moved in the opposite direction, from $P=0$ to $P=1$, without moving the switch *Q*, then the light is turned on and $R=1$.

Similarly, if $Q=1$ and $P=0$, then $R=1$.

Combine this information in an input/output as shown below.

P	*Q*	*R*
1	1	0
1	0	1
0	1	1
0	0	0

Step 3 of 4

Note that the second and third row of the given input/output table results in an output of 1. The second row corresponds with $P=1$ and $Q=0$. If $Q=0$, then the negation has the opposite value, thus $Q=1$.

Thus, $R=1$ in the second row if $P=1$ and $Q=1$; or equivalently their conjunction $P\wedge Q=1$.

The third row corresponds with $P=0$ and $Q=1$. If $P=0$, then the negation has the opposite value, thus $P=1$.

Thus, $R=1$ in the third row if $P=1$ and $Q=1$; or equivalently their conjunction $P\wedge Q=1$.

The Boolean expression corresponding to the given table is then the disjunction of the two previous statements, $(P\wedge Q)\vee(P\wedge Q)$.

Step 4 of 4

Now, design a circuit. The negations will occur before the conjunctions and disjunction, so first negate *P* by using a NOT gate with input *P* and negate *Q* by using a NOT gate with input *Q*.

Next, the conjunctions occur before the disjunction in $(P\wedge Q)\vee(P\wedge Q)$ due to the two pairs of brackets. So, use an AND gate with input *P* and Q to form $P\wedge Q$, while use an AND gate with input P and *Q* to form $P\wedge Q$.

Finally, take the disjunction of $P\wedge Q$ and $P\wedge Q$ by using an OR gate.

The circuit is as shown below.

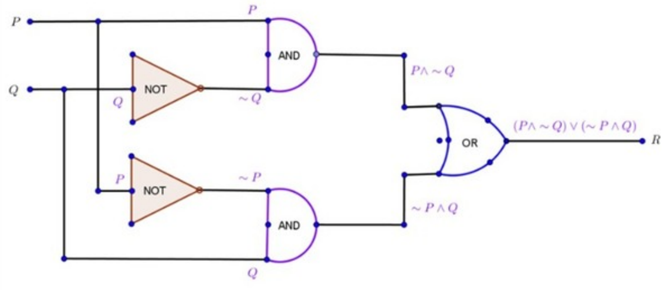

Chapter 2.4, Problem 25E

Problem

An alarm system has three different control panels in three different locations. To enable the system, switches in at least two of the panels must be in the on position. If fewer than two are in the on position, the system is disabled. Design a circuit to control the switches.

Step-by-step solution

Step 1 of 2

Let the switch being on is represented by 1 and switch being off is 0.

We know that the alarm is enabled only if at least two switches are on. Thus, the alarm will remain enabled for the following combinations.

P	*Q*	*R*	*Alarm*
1	1	1	1
1	1	0	1
1	0	1	1
1	0	0	0
0	1	1	1
0	1	0	0
0	0	1	0
0	0	0	0

From the above table we observe that output is 1 when any one of the three combinations of any two signals connected via AND gate is 1.

Step 2 of 2

Also, the output is 0 when all the three combinations of any two signals connected via AND gate are 0.

Thus, the Boolean expression for the circuit is $(P \wedge Q) \vee (Q \wedge R) \vee (R \wedge P)$.

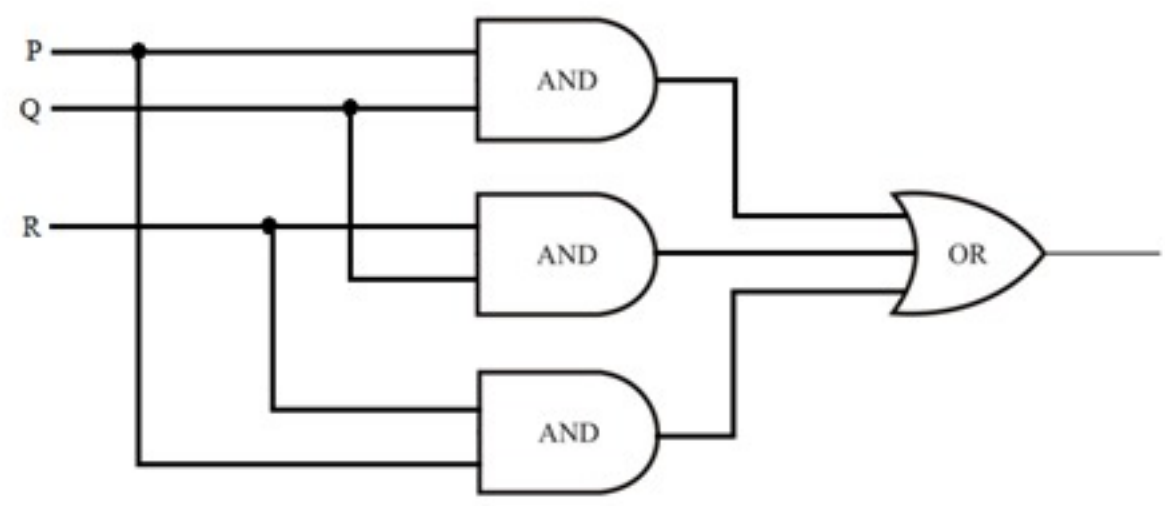

Chapter 2.4, Problem 26E

Problem

Use the properties listed in Theorem 2.1.1 to show that each pair of circuits in 26–29 have the same input/output table. (Find the Boolean expressions for the circuits and show that they arelogically equivalent when regarded as statement forms.)

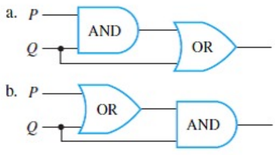

Reference:

Given any statement variables *p*, *q*, and *r* , a tautology **t** and a contradiction **c**, the following logical equivalences hold.

Step-by-step solution

Step 1 of 4

Consider the pair of circuits,

(a)

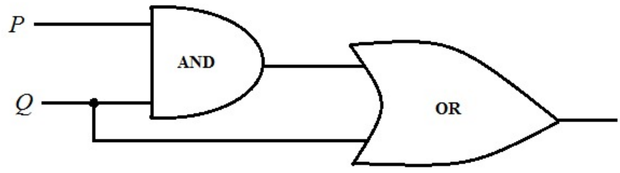

(b)

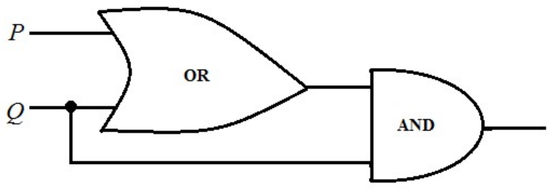

Step 2 of 4

The objective is to find the Boolean expressions for the circuits.

And the objective is to identify whether the two circuits are logically equivalent or not.

To write the Boolean expression for figure (a), start in reverse order, that is start with the gate give the final output.

One of the input of AND gate gives final output is P.

Thus, the Boolean expression becomes $P \wedge (\ )$.

Look at the second input Q, observe that it is preceded by an OR gate.

Add the gate to the Boolean expression.

The expression becomes,

$(P \wedge Q) \vee Q$

The Boolean expression that corresponds to circuit (a) is $(P \wedge Q) \vee Q$.

Step 3 of 4

To write the Boolean expression for figure (b), start in reverse order, that is start with the gate give the final output.

One of the input of OR gate gives final output is P.

Thus, the Boolean expression becomes $P \vee (\ )$.

Look at the second input Q, observe that is preceded by AND gate.

Add the gate to the Boolean expression.

The expression becomes,

$(P \vee Q) \wedge Q$.

The Boolean expression that corresponds to circuit (b) is $(P \vee Q) \wedge Q$.

Step 4 of 4

Simplify the above expression using the theorem of logical equivalences.

$(P \wedge Q) \vee Q \equiv Q \vee (P \wedge Q)$ From the commutative law for $\vee$.

$\equiv (Q \vee P) \wedge (Q \vee Q)$ From the distributive law

$\equiv (Q \vee P) \wedge Q$ From the idempotent law

$\equiv (P \vee Q) \wedge Q$ From the commutation law for $\vee$.

It follows that the truth tables for $(P \wedge Q) \vee Q$ and $(P \vee Q) \wedge Q$ are the same.

Thus, the input | output tables for the circuits, corresponding to these expressions are also the same.

So the circuits are equivalent.

Thus, the two circuits given in figures (a) and (b) are equivalent.

Chapter 2.4, Problem 27E

Problem

Use the properties listed in Theorem 2.1.1 to show that each pair of circuits in 26–29 have the same input/output table. (Find the Boolean expressions for the circuits and show that they arelogically equivalent when regarded as statement forms.)

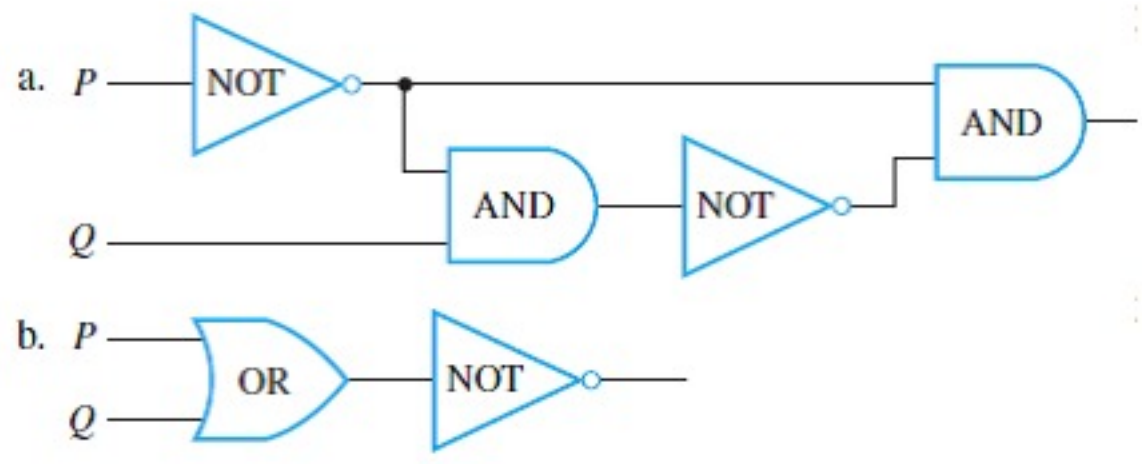

Reference:

Given any statement variables p, q, and r , a tautology **t** and a contradiction **c**, the following logical equivalences hold.

Step-by-step solution

Step 1 of 4

Consider the figure,

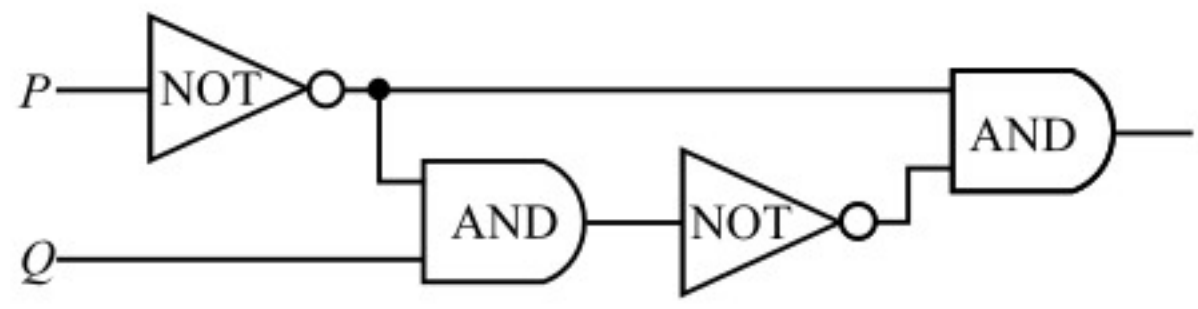

Step 2 of 4

Objective is to determine the Boolean expression for the above figure and show that the statements are logically equivalent.

The boolean expression for the above figure (a) is: $\neg P \wedge (\neg(\neg P \wedge Q))$

Step 3 of 4

Now consider the figure,

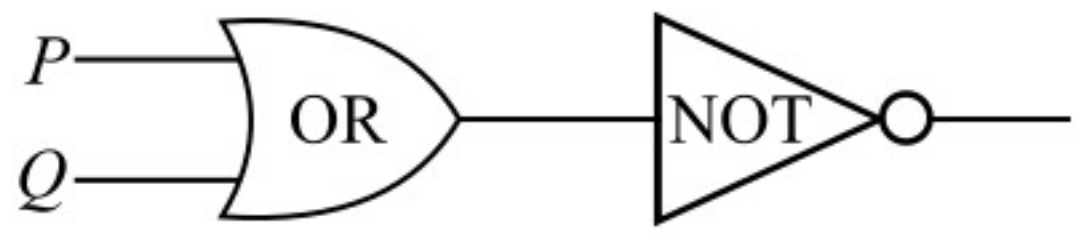

Step 4 of 4

The boolean expression for the above figure (b) is, $\neg(P \vee Q)$

Now consider,

$$\neg P \wedge (\neg(\neg P \wedge Q))$$

By the De Morgan's law,

$$\neg P \wedge (\neg(\neg P \wedge Q)) \equiv \neg P \wedge (\neg(\neg P) \vee \neg Q)$$

Now by the double negative law,

$$\neg P \wedge (\neg(\neg P) \vee \neg Q) \equiv \neg P \wedge (P \vee \neg Q)$$

Now apply the distributive law to get,

$$\neg P \wedge (P \vee \neg Q) \equiv (\neg P \wedge P) \vee (\neg P \wedge \neg Q)$$

Now by the negation law for $\wedge$,

$$(\neg P \wedge P) \vee (\neg P \wedge \neg Q) \equiv \mathbf{c} \vee (\neg P \wedge \neg Q)$$

Here, $\mathbf{c}$ is a contradiction.

Now the identity law for $\vee$ implies that,

$$\mathbf{c} \vee (\neg P \wedge \neg Q) \equiv \neg P \wedge \neg Q$$

Now again apply the De Morgan's law to get,

$$\neg P \wedge \neg Q \equiv \neg(P \vee Q)$$

This shows that,

$$\neg P \wedge (\neg(\neg P \wedge Q)) \equiv \neg(P \vee Q)$$

That is, the circuits in the figure (a) and (b) are equivalent.

Chapter 2.4, Problem 28E

Problem

Use the properties listed in Theorem 2.1.1 to show that each pair of circuits in 26–29 have the same input/output table. (Find the Boolean expressions for the circuits and show that they arelogically equivalent when regarded as statement forms.)

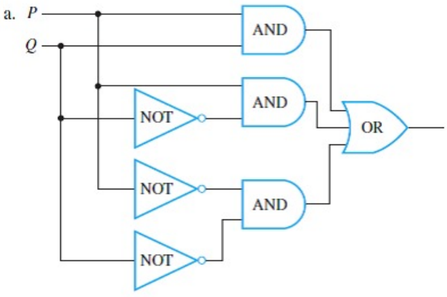

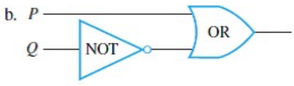

Reference:

Given any statement variables *p*, *q*, and *r* , a tautology **t** and a contradiction **c**, the following logical equivalences hold.

Step-by-step solution

Step 1 of 4

Consider the following Boolean expression corresponding to circuits given in (a) and (b):

a)

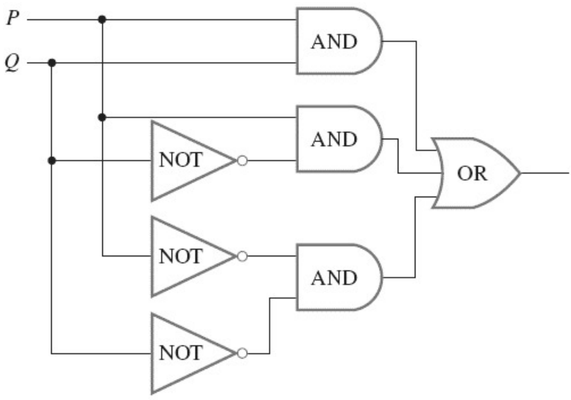

b)

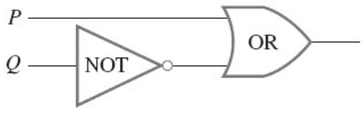

Step 2 of 4

The objective is to show that the above Boolean expressions are logically equivalent.

Step 3 of 4

Consider the first Boolean expression and write it in the statement form as shown below:

$$
\begin{aligned}
&(P\wedge Q)\vee(P\wedge\sim Q)\vee(\sim P\wedge\sim Q)\\
&\equiv(P\wedge Q)\vee(P\wedge\sim Q)\vee(\sim P\wedge\sim Q) && \text{(the associative law)}\\
&\equiv(P\wedge(Q\vee\sim Q))\vee(\sim P\wedge\sim Q) && \text{(the distributive law)}\\
&\equiv(P\wedge T)\vee(\sim P\wedge\sim Q) && \text{(the negation law)}\\
&\equiv P\vee(\sim P\wedge\sim Q) && \text{(the identity law)}\\
&\equiv(P\vee\sim P)\wedge(P\vee\sim Q) && \text{(the distributive law)}\\
&\equiv T\wedge(P\vee\sim Q) && \text{(the negation law)}\\
&\equiv(P\vee\sim Q)\wedge T && \text{(the commutative law)}\\
&\equiv P\vee\sim Q && \text{(the identity law)}
\end{aligned}
$$

Step 4 of 4

It follows that the statement $(P\wedge Q)\vee(P\wedge\sim Q)\vee(\sim P\wedge\sim Q)$ and $P\vee\sim Q$ are the same, as the second can be derived from the first expression.

Thus, the input | output tables for the circuits corresponding to these expressions will also be the same, so the circuits are equivalent.

Chapter 2.4, Problem 29E

Problem

Use the properties listed in Theorem 2.1.1 to show that each pair of circuits in 26–29 have the same input/output table. (Find the Boolean expressions for the circuits and show that they arelogically equivalent when regarded as statement forms.)

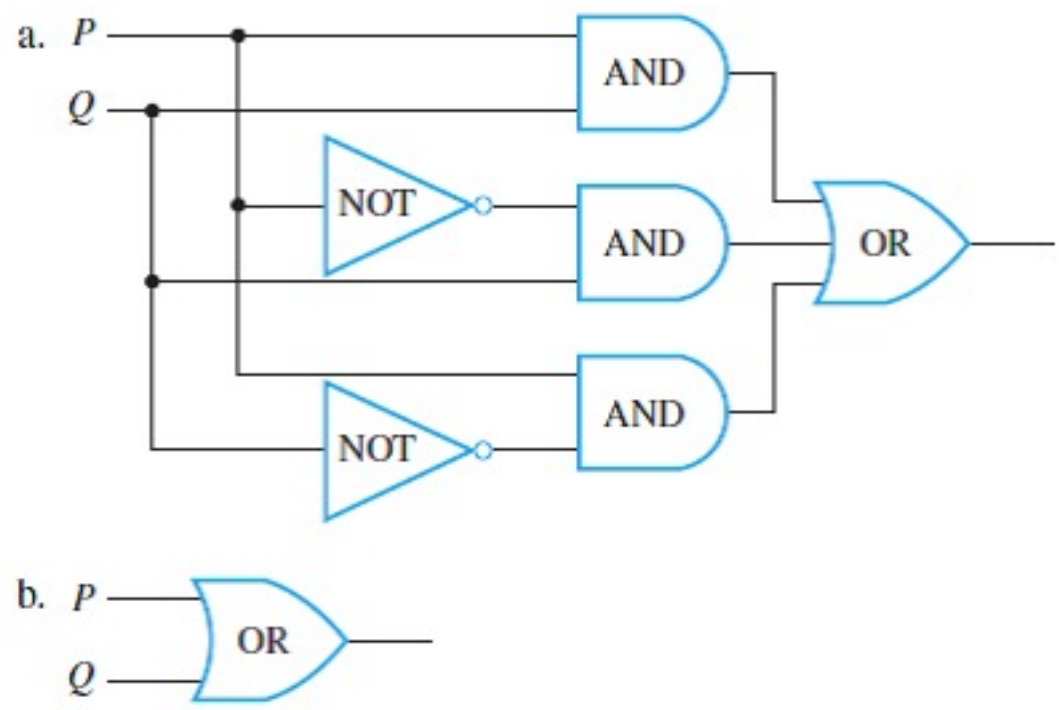

Reference:

Given any statement variables *p, q*, and *r* , a tautology **t** and a contradiction **c**, the following logical equivalences hold.

Step-by-step solution

Step 1 of 3

The Boolean expressions that correspond to circuits (a) and (b) are

$(P \wedge Q) \vee (\square P \wedge Q) \vee (P \wedge \square Q)$ and $(P \vee Q)$

Step 2 of 3

Now,

$(P \wedge Q) \vee (\square P \wedge Q) \vee (P \wedge \square Q)$

$\equiv (P \wedge Q) \vee (P \wedge \sim Q) \vee (\sim P \wedge Q)$ from the associative law

$\equiv [P \wedge (Q \vee \sim Q)] \vee (\sim P \wedge Q)$ from the distributive law

$\equiv [P \wedge T] \vee (\sim P \wedge Q)$ from the negation law for $\vee$

$\equiv P \vee (\sim P \wedge Q)$ from the identity law for $\wedge$

$\equiv (P \vee \sim P) \wedge (P \vee Q)$ from the distributive law

$\equiv T \wedge (P \vee Q)$ from the negation law for $\vee$

$\equiv P \vee Q$ from the identity law for $\wedge$

Step 3 of 3

$\therefore (P \wedge Q) \vee (\sim P \wedge Q) \vee (P \wedge \sim Q) \equiv (P \vee Q)$

It follows that the truth tables for $(P \wedge Q) \vee (\sim P \wedge Q) \vee (P \wedge \sim Q)$

and $P \vee Q$ are the same.

Thus, the input | output tables for the circuits corresponding to these expressions are also the same, so the circuits are equivalent.

Chapter 4.1, Problem 1E

Problem

Use the definitions of even, odd, prime, and composite to justify each of your answers.

Exercise

Assume that *k* is a particular integer.

a. Is − 17 an odd integer?

b. Is 0 an even integer?

c. Is 2*k* − 1 odd?

Step-by-step solution

Step 1 of 3

(a)

An integer *n* is odd if, and only if, *n* can be expressed as twice some integer plus 1. That is, if *n* can be written of the form $2k+1$ where *k* is some integer.

To check if -17 is an odd integer, see if it is possible to express -17 in the form $2k+1$ for some integer *k*.

Now, $-17=2(-9)+1$ which is of the form $2k+1$ with $k=-9$, an integer.

Therefore $\boxed{\text{yes}}$, -17 is an odd integer.

Step 2 of 3

(b)

An integer *n* is even if, and only if, *n* can be expressed as twice some integer. That is, if *n* can be written of the form $2k$ where *k* is some integer.

To check if 0 is an even integer, see if it is possible to express 0 in the form $2k$ for some integer *k*.

Now, $0=2(0)$ which is of the form $2k$ with $k=0$, an integer.

Therefore $\boxed{\text{yes}}$, 0 is an even integer.

Step 3 of 3

(c)

An integer *n* is odd if, and only if, *n* can be expressed as twice some integer plus 1. That is, if *n* can be written of the form $2k+1$ where *k* is some integer.

To check if $2k-1$ is an odd integer, see if it is possible to express $2k-1$ in the form $2k_1+1$ for some integer k_1.

Now,

$$\begin{aligned} 2k-1 &= 2k-2+1 \\ &= 2(k-1)+1 \end{aligned}$$

which is of the form $2k_1+1$ with $k_1=k-1$, an integer.

Therefore $\boxed{\text{yes}}$, $2k-1$ is an odd integer.

Chapter 4.1, Problem 2E

Problem

Assume that c is a particular integer.

a. Is $-6c$ an even integer?

b. Is $8c + 5$ an odd integer?

c. Is $(c2 + 1) - (c2 - 1) - 2$ an even integer?

Step-by-step solution

Step 1 of 6

(a)

Consider the given statement.

$-6c$ is an even integer.

c is a particular integer.

The objective is to find whether the statement is true or false with justifications.

Step 2 of 6

Observe that $-6c = 2(-3c)$. Also the product of 2 integers –3 and c is also an integer.

Recall the fact that any integer multiplied by 2 is an even integer.

Thus, –6c is an even integer.

Step 3 of 6

(b)

Consider the given statement.

$8c + 5$ is an odd integer.

The objective is to find whether the statement is true or false with justifications.

Step 4 of 6

Observe that $8c + 5 = (8c + 4) + 1 = 2(4c + 2) + 1$. Also c, 4 and 2 are integers and thus $4c + 2$ is an integer. Recall the fact that $2k + 1,\ k \in \mathbb{Z}$ is an odd integer.

Thus, $8c + 5$ is an odd integer.

Step 5 of 6

(c)

Consider the given statement.

$(c^2 + 1) - (c^2 - 1) - 2$ is an even integer.

The objective is to find whether the statement is true or false with justifications.

Step 6 of 6

Observe that $(c^2 + 1) - (c^2 - 1) - 2 = c^2 + 1 - c^2 + 1 - 2 = 0$. Recall the fact $0 = 2 \times 0$.

Thus, $(c^2 + 1) - (c^2 - 1) - 2$ is an even integer.

Chapter 4.1, Problem 3E

Problem

Use the definitions of even, odd, prime, and composite to justify each of your answers.

Exercise

Assume that *m* and *n* are particular integers.

a. Is 6*m* + 8*n* even?

b. Is 10*mn* + 7 odd?

c. If *m* > *n* > 0, is *m*2 − *n*2 composite?

Step-by-step solution

Step 1 of 9

(a)

Consider that *m* and *n* are particular integers.

The objective is to find whether $6m+8n$ is even or not by using the definitions of even, odd, prime and composite.

Step 2 of 9

Find whether the number $6m+8n$ is even or not as,

The number $6m+8n$ can be written as $2(3m+4n)$.

Step 3 of 9

Definition:

If *n* is an even integer

n is an even $\Leftrightarrow$ $\exists$ an integer k sunch that $n=2k$

Step 4 of 9

Since the number $6m+8n$ can be written as $2(3m+4n)$.

Therefore, from the definition of the even integer clearly the number $6m+8n$ is **even.**

(b)

Consider that *m* and *n* are particular integers.

The objective is to find whether $10mn+7$ is odd or not by using the definitions of even, odd, prime and composite.

Step 5 of 9

Find whether the number $10mn+7$ is odd or not as,

The number $10mn+7$ can be written as

$$\begin{aligned}10mn+7&=(10mn+8)-1\\&=2(5mn+4)-1\end{aligned}$$

Step 6 of 9

Definition:

If *n* is an odd integer

n is an odd $\Leftrightarrow$ $\exists$ an integer k sunch that $n=2k+1$

Step 7 of 9

Since the number $10mn+7$ can be written as $2(5mn+4)-1$.

Therefore, from the definition of the odd integer clearly the number $10mn+7$ is **odd.**

Step 8 of 9

(c)

Consider that *m* and *n* are particular integers.

The objective is to find whether the statement "if $m>n>0$, is m^2-n^2 composite?" is true or false.

Step 9 of 9

The given statement is **not true** for all $m>n>0$.

For example:

If $m>n>0$, suppose $m=2$ and $n=1$, then $m^2-n^2=2^2-1^2=3$

Therefore, the number m^2-n^2 is a **prime number**.

Chapter 4.1, Problem 4E

Problem

Use the definitions of even, odd, prime, and composite to justify each of your answers.

Exercise

Assume that *r* and *s* are particular integers.

a. Is 4*rs* even?

b. Is 6*r* + 4*s*2 + 3 odd?

c. If *r* and *s* are both positive, is *r*2 + 2*rs* + *s*2 composite?

Step-by-step solution

Step 1 of 4

Assume that *r* and *s* are particular integers. Use definitions of even, odd, prime and composite to justify the following:

a) Is $4rs$ is even?

b) Is $6r+4s^2+3$ odd?

c) If *r* and *s* are both positive is $r^2+2rs+s^2$ composite?

Step 2 of 4

a)

Assume that *r* and *s* are particular integers.

Consider the number is 4*rs*.

4*rs* can be written as,

$$4rs = 2(2rs)$$

An even number is an integer evenly divisible by 2.

Since *r* and *s* are integers, this implies 2*rs* is an even number for all integer values of *r* and *s*.

Also, $2(2rs)$ is an even integer.

Therefore, **yes**, 4*rs* is an even integer.

Step 3 of 4

b)

Assume that *r* and *s* are particular integers.

It is given that the number is $6r+4s^2+3$.

It can be written as,

$$6r+4s^2+3=(6r+4s^2+2)+1$$

$$=2(3r+2s^2+1)+1$$

$$=2K+1,\ \text{where } K=3r+2s^2+1$$

An even number is an integer evenly divisible by 2 and *r* and *s* are arbitrary integers, so is $3r+2s^2+1$.

Thus, $2(3r+2s^2+1)$ is an even number as it is divisible by 2 and adding one to it makes it an odd integer.

Therefore, **yes**, $6r+4s^2+3$ is an odd integer.

Step 4 of 4

c)

Consider the number $r^2+2rs+s^2$.

If *r* and *s* are both positive, i.e., $r>0,\ s>0$.

Rewrite the number as follows:

$$r^2+2rs+s^2=(r+s)^2=(r+s)\cdot(r+s)$$

Composite number is a number which is completely divisible by numbers other than 1 and itself.

Since $r^2+2rs+s^2=(r+s)^2=(r+s)\cdot(r+s)$, the number is divisible by 1, itself and its factor $(r+s)$, which makes $r^2+2rs+s^2$ a composite number.

Thus, **yes**, by the definition of a composite number, the given number $r^2+2rs+s^2$ is a composite number.

Chapter 4.1, Problem 5E

Problem

Prove the statements.

Exercise

There are integers m and n such that $m > 1$ and $n > 1$ and $\frac{1}{m} + \frac{1}{n}$ is an integer.

Step-by-step solution

Step 1 of 2

The given statement starts with the words "There are" that show that the statement is an existential statement.

To prove that the given statement is true, it is sufficient to find at least one pair of integers m and n that satisfies the statement.

Find at least one pair of integers m and n such that $m > 1, n > 1$ and $\frac{1}{m} + \frac{1}{n}$ is an integer.

Step 2 of 2

Let $m = 2(>1)$ and $n = 2(>1)$. Both m and n are integers.

Then,

$$\begin{aligned}\frac{1}{m} + \frac{1}{n} &= \frac{1}{2} + \frac{1}{2} \\ &= 1 \text{ which is an integer}\end{aligned}$$

Since we are able to find one such value for m and n that satisfies the given statement, the statement is $\boxed{\text{true}}$.

Chapter 4.1, Problem 6E

Problem

Prove the statements.

Exercise

There are distinct integers *m* and *n* such that $\frac{1}{m}+\frac{1}{n}$ is an integer.

Step-by-step solution

Step 1 of 2

Consider the statement

"There are distinct integers m and n such that $\frac{1}{m}+\frac{1}{n}$ is an integer."

The objective is to prove the statement.

Step 2 of 2

The above statement can be proved by taking example.

Let the distinct integer be $m=3, n=-3$.

And both $3,-3$ are integers.

Now substitute the value of m and n in the expression,

$$\begin{aligned}&\frac{1}{m}+\frac{1}{n}\\&=\frac{1}{3}+\frac{1}{(-3)}\\&=\frac{1}{3}-\frac{1}{3}\\&=0\end{aligned}$$

And 0 is an integer so the statement is correct.

Hence, there are distinct integers $\boxed{m \text{ and } n}$ such that $\boxed{\frac{1}{m}+\frac{1}{n}}$ is an integer.

Chapter 4.1, Problem 7E

Problem

Prove the statements.

Exercise

There are real numbers *a* and *b* such that

$\sqrt{a+b} = \sqrt{a} + \sqrt{b}.$

Step-by-step solution

Step 1 of 1

Let $a = 1$ and $b = 0$ be real numbers

Now, we must show that $\sqrt{a+b} = \sqrt{a} + \sqrt{b}$

$\therefore \sqrt{a+b} = \sqrt{1+0}$ [by substitution]

$= \sqrt{1}$

$= 1$

$\sqrt{a} + \sqrt{b} = \sqrt{1} + \sqrt{0}$

$= 1 + 0$

$= 1$

$\therefore \sqrt{a+b} = \sqrt{a} + \sqrt{b}$

$\therefore$ There are real numbers $a = 1$ and $b = 0$ such that $\sqrt{a+b} = \sqrt{a} + \sqrt{b}$

Chapter 4.1, Problem 8E

Problem

Prove the statements.

Exercise

There is an integer $n > 5$ such that $2n - 1$ is prime.

Step-by-step solution

Step 1 of 1

The objective is to prove the statement.

The statement is as follows.

"There are integers $n > 5$ such that $2^n - 1$ is prime."

The above statement can be proved by taking one examples.

Let the integer be $n = 7$.

Then n is an integer such that $n > 5$.

Now substitute the value of n in the expression,

$$\begin{aligned} & 2^n - 1 \\ & = 2^7 - 1 \\ & = 128 - 1 \\ & = 127 \end{aligned}$$

And 127 is a prime number.

So, the given statement is proved.

Chapter 4.1, Problem 9E

Problem

Prove the statements.

Exercise

There is a real number x such that $x > 1$ and $2x > x10$.

Definition: An integer n is called a **perfect square** if, and only if, $n = k2$ for some integer k.

Step-by-step solution

Step 1 of 2

The objective is to prove the following statement.

"There is a real number x such that $x > 1$ and $2^x > x^{10}$."

The above statement can be proved by showing that it is true for some example.

Step 2 of 2

Let the integer be, $x = 1.05$

Then, x is an integer such that $x > 1$.

Now, substitute the value of x in the following expression,

$$2^x > x^{10}.$$

$$\begin{aligned} 2^x > x^{10} &= 2^{1.05} > 1.05^{10} \\ &= 2.07 > 1.62 \end{aligned}$$

Thus, there exists a real number say $x = 1.05$ such that $x > 1$ and $2^x > x^{10}$.

Chapter 4.1, Problem 10E

Problem

Prove the statements.

Exercise

There is a perfect square that can be written as a sum of two other perfect squares.

Step-by-step solution

Step 1 of 3

Consider the following statement:

"There is a perfect square that can be written as a sum of two other perfect squares."

The objective is to prove the above statement.

Step 2 of 3

An integer n is called a perfect square if and only if $n = k^2$ for some integer k.

It is enough to find integers p, q and k such that $k^2 = p^2 + q^2$ to prove that the given statement is true.

The above statement can be proved by taking the following examples.

1)

Assume the numbers $25, 16, 9$. These numbers are all perfect squares.

$$25 = 5^2$$
$$16 = 4^2$$
$$9 = 3^2$$

This implies, $25 = 16 + 9$.

Thus, 25 is a perfect square that can be written as a sum of two other perfect squares.

Step 3 of 3

2)

Assume the numbers $36, 64, 100$. These numbers are all perfect squares.

$$36 = 6^2$$
$$64 = 8^2$$
$$100 = 10^2$$

This implies, $100 = 36 + 64$.

Thus, 100 is a perfect square that can be written as a sum of two other perfect squares.

Therefore, the statement "There is a perfect square that can be written as a sum of two other perfect squares" is **true**.

Chapter 4.1, Problem 11E

Problem

Prove the statements.

Exercise

There is an integer n such that $2n2 - 5n + 2$ is prime.

Step-by-step solution

Step 1 of 3

The objective of the question is to prove that there is an integer n such that $2n^2 - 5n + 2$ is prime.

Step 2 of 3

Consider the statement:

"There is an integer n such that $2n^2 - 5n + 2$ is a prime."

Consider $2n^2 - 5n + 2$,

Constructive Proof of Existence:

When $n = 3$,

Now put the value of $n = 3$ in equation $2n^2 - 5n + 2$,

Step 3 of 3

This implies;

$$\begin{aligned} 2n^2 - 5n + 2 &= 2(3)^2 - 5(3) + 2 \\ &= 2(9) - 15 + 2 \\ &= 18 - 13 \\ &= 5 \end{aligned}$$

This implies;

$$2n^2 - 5n + 2 = 5$$

Here, 5 is a prime number.

So, $2n^2 - 5n + 2$ is also prime.

Hence proved, there is an integer n such that $2n^2 - 5n + 2$ is prime.

Chapter 4.1, Problem 12E

Problem

Disprove the statement by giving a counterexample.

Exercise

For all real numbers *a* and *b*, if *a then a2<b2*.

Step-by-step solution

Step 1 of 2

Consider that a statement "for all real numbers *a* and *b*, if $a < b$ then $a^2 < b^2$".

The objective is to disprove the statement by giving a counter example.

Step 2 of 2

Counterexample:

Let $a = -3$ and $b = -2$, then $a < b$, because $-3 < -2$

However, $a^2 \nless b^2$

Because $(-3)^2 = 9$ and $(-2)^2 = 4$ and $9 \nless 4$.

Hence, the exist two real numbers $-3, -2 \in R$, if $-3 < -2$ then $(-3)^2 \nless (-2)^2$.

Therefore, the statement is **false**.

Chapter 4.1, Problem 13E

Problem

Disprove the statement by giving a counterexample.

Exercise

For all integers *n*, if *n* is odd then $\frac{n-1}{2}$ is odd.

Step-by-step solution

Step 1 of 1

Counterexample

Let $n = 5$ be an odd integer

Now, we calculate $\frac{n-1}{2} = \frac{5-1}{2}$

$= \frac{4}{2}$

$= 2$, which is even

If *n* is odd, then $\frac{n-1}{2}$ is even

Chapter 4.1, Problem 14E

Problem

Disprove the statement by giving a counterexample.

Exercise

For all integers *m* and *n*, if 2*m* + *n* is odd then *m* and *n* are both odd.

Step-by-step solution

Step 1 of 2

Let the statement is "For all integers *m* and *n*, if $2m+n$ is odd then *m* and *n* are both odd."

Now, the statement is false.

Counter example to disprove the statement is:

Let us assume that $m=2$ and $n=1$.

Then,

$$2m+n=2(2)+(1)$$
$$=4+1$$
$$=5$$

Step 2 of 2

Thus, $2m+n$ is odd.

But $m=2$. Which is not odd.

Hence, the statement is false.

Chapter 4.1, Problem 15E

Problem

For every integer p, if p is prime then $p2 - 1$ is even.

Step-by-step solution

Step 1 of 2

Consider the given statement.

For every integer p, if p is prime then $p2 – 1$ is even.

The objective is to disprove the given statement by giving a counterexample.

Step 2 of 2

Consider the prime integer 2.

$$\begin{aligned} p^2 - 1 &= 2^2 - 1 \\ &= 4 - 1 \\ &= 3 \end{aligned}$$

Observe that 3 is an odd integer. And thus $p^2 - 1$ is an odd number.

Thus $p^2 - 1$ is not an even integer.

Thus, the given statement is not true.

Chapter 4.1, Problem 16E

Problem

For every integer n, if n is even then $n2 + 1$ is prime.

Step-by-step solution

Step 1 of 2

Consider the given statement.

For every integer n, if n is even then $n2 + 1$ is prime.

The objective is to disprove the given statement by giving a counterexample.

Step 2 of 2

Consider the even integer 8.

$$\begin{aligned} n^2+1 &= 8^2+1 \\ &= 64+1 \\ &= 65 \\ &= 13\times 5 \end{aligned}$$

Observe that 65 can be written as the product of two prime numbers.

Thus 65 is not a prime number.

Thus, the given statement is not true.

Chapter 4.1, Problem 17E

Problem

Determine whether the property is true for all integers, true for no integers, or true for some integers and false for other integers. Justify your answers.

$(a + b)2 = a2 + b2$

Step-by-step solution

Step 1 of 3

Consider the given property.

$$(a+b)^2 = a^2 + b^2$$

The objective is to check whether the property is true for all integers, or no integers, or some integers and incorrect for other integers.

Step 2 of 3

Consider the integers $a = 1, b = 0$.

$$(1+0)^2 = 1^2 = 1$$
$$1^2 + 0^2 = 1 + 0 = 1$$
$$(1+0)^2 = 1^2 + 0^2$$

Thus, the given property is true for some integers.

Step 3 of 3

Consider the integers $a = 1, b = 2$.

$$(1+2)^2 = 3^2 = 9$$
$$1^2 + 2^2 = 1 + 4 = 5$$
$$\Rightarrow (1+2)^2 \neq 1^2 + 2^2$$

Observe that the given property is false for some integers.

Therefore, the given property is correct for some integers and incorrect for other integers.

Chapter 4.1, Problem 18E

Problem

Determine whether the property is true for all integers, true for no integers, or true for some integers and false for other integers. Justify your answers.

$$\frac{a}{b}+\frac{c}{d}=\frac{a+c}{b+d}$$

Step-by-step solution

Step 1 of 3

Consider the given property.

$$\frac{a}{b}+\frac{c}{d}=\frac{a+c}{b+d}$$

The objective is to determine whether the given property is correct for all integers, or no integers, or some integers and false for other integers.

Step 2 of 3

Consider the integers $a=1, b=2, c=2, d=4$.

$$\frac{a}{b}+\frac{c}{d}=\frac{1}{2}+\frac{2}{4}=1$$

$$\frac{a+c}{b+d}=\frac{1+2}{2+4}=\frac{3}{6}=\frac{1}{2}$$

$$\Rightarrow \frac{a}{b}+\frac{c}{d}\neq\frac{a+c}{b+d}$$

Observe that the given property is false for all integers.

Step 3 of 3

The correct property would be as follows.

$$\frac{a}{b}+\frac{c}{d}=\frac{ad+bc}{bd}$$

Therefore, the given property is true for no integers.

Chapter 4.1, Problem 19E

Problem

Determine whether the property is true for all integers, true for no integers, or true for some integers and false for other integers. Justify your answers.

$-an = (-a)n$

Step-by-step solution

Step 1 of 2

Consider the given property.

$$-a^n = (-a)^n$$

The objective is to determine whether the property is correct for all integers, or no integers, or some integers and false for other integers.

Step 2 of 2

Consider the below table.

a	n	$-a^n$	$(-a)^n$	$-a^n \overset{?}{=} (-a)^n$
0	2	0	0	True
1	2	−1	1	False
5	3	−125	−125	True
−2	1	2	2	True

Observe that the given property is true for some integers and false for other integers.

The property is false, if *a* is positive and *n* is an even integer and if *a* is negative and *n* is an even integer.

The property is true, if *a* is positive and *n* is an odd integer and if *a* is negative and *n* is an odd integer.

Chapter 4.1, Problem 20E

Problem

Determine whether the property is true for all integers, true for no integers, or true for some integers and false for other integers. Justify your answers.

Exercise

The average of any two odd integers is odd.

Step-by-step solution

Step 1 of 3

The average of any two numbers is found by dividing their sum by 2.

Check if the average of any two odd numbers is odd.

An integer *n* is odd if, and only if, *n* can be expressed as twice some integer plus 1. That is, if *n* can be written of the form $2k+1$ where *k* is some integer.

Step 2 of 3

Let *m* and *n* be two odd numbers. Then, *m* and *n* can be expressed as $m=2k_1+1$ and $n=2k_2+1$ for some integers k_1, k_2.

Find the average of *m* and *n*.

$$\begin{aligned}\text{Average} &= \frac{m+n}{2}\\ &= \frac{2k_1+1+2k_2+1}{2}\\ &= \frac{2(k_1+k_2)+2}{2}\\ &= k_1+k_2+1\end{aligned}$$

Step 3 of 3

Now, k_1+k_2+1 can be odd or even depending upon the value of the integers k_1 and k_2. Hence, the given property is true for some integers and false for other integers.

Consider the following examples.

Let $m=3, n=5$.

Then, their average is $\frac{3+5}{2}=\frac{8}{2}=4$ which is even.

Let $m=3, n=7$.

Then, their average is $\frac{3+7}{2}=\frac{10}{2}=5$ which is odd.

Chapter 4.1, Problem 21E

Problem

Prove the statement by the method of exhaustion.

Exercise

Every positive even integer less than 26 can be expressed as a sum of three or fewer perfect squares. (For instance, 10 = 12 + 32 and 16 = 42.)

Step-by-step solution

Step 1 of 1

The positive even integers less than 26 are 2, 4, 6, 8, 10, 12, 14, 16, 18, 20, 22, and 24

It can be expressed as a sum of three or fewer perfect squares

$$2 = 1^2 + 1^2$$

$$4 = 2^2$$

$$6 = 2^2 + 1^2 + 1^2$$

$$8 = 2^2 + 2^2$$

$$10 = 3^2 + 1^2$$

$$12 = 2^2 + 2^2 + 2^2$$

$$14 = 3^2 + 2^2 + 1^2$$

$$16 = 4^2$$

$$18 = 3^2 + 3^2 = 4^2 + 1^2 + 1^2$$

$$20 = 4^2 + 2^2$$

$$22 = 3^2 + 3^2 + 2^2$$

$$24 = 4^2 + 2^2 + 2^2$$

Chapter 4.1, Problem 22E

Problem

Prove the statement by the method of exhaustion.

Exercise

For each integer n with $1 \le n \le 10$, $n2 - n + 11$ is a prime number.

Step-by-step solution

Step 1 of 1

For each integer n with $n = 1, 2, 3, 4, 5, 6, 7, 8, 9, 10$

Now, we claim that $n^2 - n + 11$ is a prime

If $n = 1$, then $n^2 - n + 11 = 1^2 - 1 + 11 = 11$

If $n = 2$, then $n^2 - n + 11 = 2^2 - 2 + 11 = 13$

If $n = 3$, then $n^2 - n + 11 = 3^2 - 3 + 11 = 17$

If $n = 4$, then $n^2 - n + 11 = 4^2 - 4 + 11 = 23$

If $n = 5$, then $n^2 - n + 11 = 5^2 - 5 + 11 = 31$

If $n = 6$, then $n^2 - n + 11 = 6^2 - 6 + 11 = 41$

If $n = 7$, then $n^2 - n + 11 = 7^2 - 7 + 11 = 53$

If $n = 8$, then $n^2 - n + 11 = 8^2 - 8 + 11 = 67$

If $n = 9$, then $n^2 - n + 11 = 9^2 - 9 + 11 = 83$

If $n = 10$, then $n^2 - n + 11 = 10^2 - 10 + 11 = 101$

Chapter 4.1, Problem 23E

Problem

Each of the statements is true. For each, (a) rewrite the statement with the quantification implicit as If _____, then, _____ and (b) write the first sentence of a proof (the "starting point") and the last sentence of a proof (the "conclusion to be shown"). Note that you do not need to understand the statements in order to be able to do these exercise.

Exercise

For all integers m, if $m > 1$ then $0 < \frac{1}{m} < 1$.

Step-by-step solution

Step 1 of 2

The statement is as follows.

"For all integers m, if $m > 1$ then $0 < \frac{1}{m} < 1$."

a.

The objective is to write the statement using "if" word.

The above sentence is explained below.

Let an integer m.

Its reciprocal is always the 1 divided by the integer, which is $\frac{1}{m}$.

So, if the integer m is greater than 1 then it is obvious that its reciprocal is less than 1 because 1 divided by the greater number is always less than 1.

To proof the above statement let's take an example.

Let an integer $m = 2$.

So, the reciprocal of that number is given below.

$$\frac{1}{2}$$
$$= 0.5 < 1$$

Therefore, the above statement can be rewritten as below.

If an integer is greater than 1, then its reciprocal is always between 0 and 1.

Step 2 of 2

b.

The objective is to write the first sentence of a proof and the last sentence of the proof.

Now the first sentence of the proof can be written as,

Suppose m is any integer such that $m > 1$.

And the conclusion which have to show or proof is : $\boxed{0 < \frac{1}{m} < 1}$.

Chapter 4.1, Problem 24E

Problem

Each of the statements is true. For each, (a) rewrite the statement with the quantification implicit as If _____, then, _____ and (b) write the first sentence of a proof (the "starting point") and the last sentence of a proof (the "conclusion to be shown"). Note that you do not need to understand the statements in order to be able to do these exercise.

Exercise

For all real numbers x, if $x > 1$ then $x2 > x$.

Step-by-step solution

Step 1 of 4

Consider the statement,

"For all real numbers x, if $x > 1$, then, $x^2 > x$.

(a)

Need to write the statement with quantification implicit as if _____, then _____

Recall, the Notation for Quantification Implicit,

Suppose $P(x)$, and, $Q(x)$ are predicates, and, D is the common domain of x. Then,

• The notation $P(x) \Rightarrow Q(x)$ defines that, every element in the truth set of $P(x)$ is in the truth set of $Q(x)$, or, equivalently, $\forall x, P(x) \to Q(x)$.

• The notation $P(x) \Leftrightarrow Q(x)$ defines that, $P(x)$, and, $Q(x)$ have the identical truth sets, or, equivalently, $\forall x, P(x) \leftrightarrow Q(x)$.

Step 2 of 4

Here,

$P(x)$: $x > 1$, and,
$Q(x)$: $x^2 > x$.

So, for every element in the truth set of $P(x)$ is in the truth set of $Q(x)$.

Then, the statement with quantification implicit as if _____, then _____ is,

IF *x* is a real number greater than 1, then, its square is greater than itself.

Step 3 of 4

(b)

Need to write the first sentence of a proof, and, last sentence of a proof.

In general, **the first sentence, or starting point**, of a proof supposes the existence of an object in the domain that satisfies the hypothesis of the if-then part of the statement.

The **last sentence, or conclusion**, of a proof is just the conclusion of the if-then part of the statement.

First rewrite the statement formally using quantifier and a variable:

Formal Restatement:

$$\forall \overbrace{\text{Real numbers } x}^{\text{Domain}}, \text{ if } \overbrace{x > 1}^{\text{Hypothesis}}, \text{ then, } \overbrace{x^2 > x}^{\text{Conclusion}}.$$

Step 4 of 4

Here, the existence of an object is x, in the domain R that satisfies the hypothesis $x > 1$.

And, the conclusion of the if-then part of the statement is $x^2 > x$.

Then,

Starting point: Suppose x is a real number such that $x > 1$.

Conclusion to be shown: $\boxed{x^2 > x}$.

Chapter 4.1, Problem 25E

Problem

Each of the statements is true. For each, (a) rewrite the statement with the quantification implicit as If _____, then, _____ and (b) write the first sentence of a proof (the "starting point") and the last sentence of a proof (the "conclusion to be shown"). Note that you do not need to understand the statements in order to be able to do these exercise.

Exercise

For all integers m and n, if $mn = 1$ then $m = n = 1$ or $m = n = -1$.

Step-by-step solution

Step 1 of 2

(a)

The objective is to rewrite the following statement with the quantification implicit as if- then form:

For all integers m and n, if $mn = 1$ then $m = n = 1$ or $m = n = -1$.

Move the "for all" after the if-statement.

If m and n are integers with $mn = 1$, then $mn = 1$

The statement without variables is:

If the product of two integers is 1, then both integers are 1 or both integers are -1.

Step 2 of 2

(b)

The objective is to write the first sentence of a proof and the last sentence of a proof.

The **first sentence** of the proof will assume that for some values m and n for which the if-statement is true.

That is, suppose m and n are integers such that $mn = 1$.

The **last sentence** of the proof will be the conclusion which is the then-statement.

That is, $m = n = 1$ or $m = n = -1$.

Chapter 4.1, Problem 26E

Problem

Each of the statements is true. For each, (a) rewrite the statement with the quantification implicit as If _____, then, _____ and (b) write the first sentence of a proof (the "starting point") and the last sentence of a proof (the "conclusion to be shown"). Note that you do not need to understand the statements in order to be able to do these exercise.

Exercise

For all real numbers x, if $0<x<1$ then $x2<x$.

Step-by-step solution

Step 1 of 3

The statement is as follows.

"For all real numbers x, if $0<x<1$ then $x^2<x$"

Step 2 of 3

(a)

The objective is to write the statement using if word.

The proof of the above statement is shown by taking an example.

Let a real number $x=0.9$.

So, the square of the number is,

$$\begin{aligned} 0.9^2 &= 0.81 \\ &< 0.9 \end{aligned}$$

So, the above statement can be rewritten as below.

If a real number is in between 0 and 1, then the square of that real number is less than that real number.

Step 3 of 3

(b)

The first sentence of the proof can be written as,

Suppose x is any real number such that $0<x<1$.

And the conclusion of the proof which has to be shown is: $\boxed{x^2<x}$

Chapter 4.1, Problem 27E

Problem

Fill in the blanks in the following proof.

Theorem: For every odd integer *n*, *n*2 is odd.

Proof: Suppose *n* is any ___(a)___ By definition of odd, $n = 2k + 1$ for some integer *k*. Then

$$\begin{aligned} n^2 &= (\underline{\quad (b) \quad})^2 && \text{by substitution} \\ &= 4k^2 + 4k + 1 && \text{by multiplying out} \\ &= 2(2k^2 + 2k) + 1 && \text{by factoring out a 2} \end{aligned}$$

Now 2*k*2 + 2*k* is an integer because it is a sum of products of integers. Therefore, *n*2 equals 2·(an integer) + 1, and so __(c)__ is odd by definition of odd.

Because we have not assumed anything about *n* except that it is an odd integer, it follows from the principle of __(d)__ that for *every* odd integer *n*, *n*2 is odd.

Step-by-step solution

Step 1 of 3

Consider the given theorem.

For every odd integer *n*, *n*2 is odd.

The main objective of the problem is to fill in the blanks.

Step 2 of 3

Assume that n is an odd number. Thus, there exists $k \in \mathbb{Z}$ satisfying $n = 2k + 1$.

Square the expression $n = 2k + 1$ to get,

$$n^2 = (2k+1)^2$$

$$n^2 = 4k^2 + 4k + 1$$

$$n^2 = 2(2k^2 + 2k) + 1$$

Assume that $2k^2 + 2k = l$.Since $\mathbb{Z}$ is closed under multiplication and addition, l is also an integer.

$$n^2 = 2l + 1$$

By the definition, n^2 is also an odd integer.

By the principle of generalizing from the generic particular, , every odd integer n, n^2 is odd integer.

Step 3 of 3

From the above proof, the first blank can be filled by (a) $\boxed{\text{odd integer}}$, the second blank can be filled by (b) $\boxed{2k+1}$, the third blank can be filled by (c) $\boxed{n}$ and the fourth blank can be filled by (d) $\boxed{\text{generalizing from the generic particular}}$.

Chapter 4.1, Problem 28E

Problem

a. Rewrite the theorem in three different ways: as ∀_____, if_____ then _____, as ∀ _____, _____ (without using the words *if* or *then*), and as If ____, then _____(without using an explicit universal quantifier).

b. Fill in the blanks in the proof of the theorem.

Theorem: The sum of any two odd integers is even.

Proof: Suppose m and n are any *[particular but arbitrarily chosen]* odd integers.

[We must show that $m + n$ is even.]

By ___(a)___, $m = 2r + 1$ and $n = 2s + 1$ for some integers r and s.

Then

$$\begin{aligned} m+n &= (2r+1)+(2s+1) && \text{by } \underline{\text{(b)}} \\ &= 2r+2s+2 \\ &= 2(r+s+1) && \text{by algebra.} \end{aligned}$$

Let $u = r + s + 1$. Then u is an integer because r, s, and 1 are integers and because ___(c)___.

Hence $m + n = 2u$, where u is an integer, and so, by ___(d)___, $m + n$ is even *[as was to be shown]*.

Step-by-step solution

Step 1 of 5

Consider the given theorem.

The sum of any two odd integers is even.

The objective is to rewrite the given theorem in 3 different ways and then fill in the blanks of the given proof.

Step 2 of 5

(a)

1. For every integers a and b, if a and b are odd then $a+b$ is even.
2. For every odd integers a and b, $a+b$ is even.
3. If a and b are any odd integers, then $a+b$ is even.

Step 3 of 5

(b)

Odd number : A number a is said to be odd if it is of the form $a = 2r+1$ for some integer r.

Even number : A number b is said to be even if it is of the form $b = 2s$ for some integer s.

Step 4 of 5

Assume that m and n are odd numbers. By definition of odd integers, there exists $r, s \in \mathbb{Z}$ satisfying $m = 2r+1$ and $n = 2s+1$.

Add the two expressions $m = 2r+1$ and $n = 2s+1$ to get,

$$\begin{aligned} m+n &= (2r+1)+(2s+1) && [\because \text{By substitution}] \\ m+n &= 2r+2s+2 \\ m+n &= 2(r+s+1) && [\because \text{By algebra}] \end{aligned}$$

Let $r+s+1 = u$. Since $\mathbb{Z}$ is closed under addition, u is an integer.

$m+n = 2u$

Thus, $m+n$ is an even integer.

Step 5 of 5

From the above proof, the first blank can be filled by (a) $\boxed{\text{definition of odd integer}}$, the second blank can be filled by (b) $\boxed{\text{Substitution}}$, the third blank can be filled by (c) $\boxed{\text{sum of integers is again an integer}}$ and the fourth blank can be filled by (d) $\boxed{\text{definition of even integer}}$.

Chapter 4.1, Problem 29E

Problem

a. Rewrite the theorem in three different ways: as ∀_____, if_____ then _____, as ∀ _____, _____ (without using the words *if* or *then*), and as If ____, then _____(without using an explicit universal quantifier).

b. Fill in the blanks in the proof of the theorem.

Theorem: The negative of any even integer is even.

Proof: Suppose n is any *[particular but arbitrarily chosen]* even integer.

[We must show that $-n$ is even.]

By __(a)__, $n = 2k$ for some integer k.

Then

$$\begin{aligned} -n &= -(2k) && \text{by } \underline{\text{(b)}} \\ &= 2(-k) && \text{by algebra.} \end{aligned}$$

Let $r = -k$. Then r is an integer because (-1) and k are integers and __(c)__.

Hence $-n = 2r$, where r is an integer, and so $-n$ is even by __(d)__ *[as was to be shown]*.

Step-by-step solution

Step 1 of 5

Consider the given theorem.

The negative of any even integer is even.

The objective is to rewrite the given theorem in three different ways and fill in the blanks for the given proof.

Step 2 of 5

(a)

1. For every integers n, if n is even then $-n$ is even.
2. For every even integers x, $-n$ is even.
3. If x is any even integer, then $-n$ is even.

Step 3 of 5

(b)

Even number: A number b is said to be even if it is of the form $b = 2s$ for some integer s.

Step 4 of 5

Let us assume that n is an even number. By the definition of even number, there exists $k \in \mathbb{Z}$ satisfying $n = 2k$.

$$\begin{aligned} -n &= -(2k) && [\text{By substitution}] \\ &= 2(-k) && [\text{By algebra}] \end{aligned}$$

Let $-k = r$. Clearly, $r \in \mathbb{Z}$ as $\mathbb{Z}$ is closed under multiplication.

$-n = 2r$

Thus, by the definition of even integer, $-n$ is an even integer.

Step 5 of 5

From the above proof, the first blank can be filled by (a) $\boxed{\text{definition of even integer}}$, the second blank can be filled by (b) $\boxed{\text{substitution}}$, the third blank can be filled by (c) $\boxed{\text{multiplication of integers is again an integer}}$ and the fourth blank can be filled by (d) $\boxed{\text{definition of even integer}}$.

Chapter 4.1, Problem 30E

Problem

a. Rewrite the theorem in three different ways: as ∀_____, if_____ then _____, as ∀ _____, _____ (without using the words *if* or *then*), and as If _____, then _____(without using an explicit universal quantifier).

b. Fill in the blanks in the proof of the theorem.

Theorem 4.1.2: The sum of any even integer and any odd integer is odd.

Proof: Suppose m is any even integer and n is __(a)__, By definition of even, $m = 2r$ for some __(b)__, and by definition of odd, $n = 2s + 1$ for some integer s. By substitution and algebra,

$m + n =$ __(c)__ $= 2(r + s) + 1$.

Since r and s are both integers, so is their sum $r + s$. Hence $m + n$ has the form twice some integer plus one, and so __(d)__ by definition of odd.

Step-by-step solution

Step 1 of 5

Consider the given theorem.

The sum of any even integer and any odd integer is odd.

The objective is to rewrite the given theorem in three different ways and fill in the blanks for the given proof.

Step 2 of 5

(a)

1. For every integers m and n, if m is even and n is odd, then $m+n$ is odd.

2. For even integer m and odd integer n, $m+n$ is odd.

3. If m is any even integer and n is any odd integer, then $m+n$ is odd.

Step 3 of 5

(b)

Odd number: A number a is said to be odd if it is of the form $a = 2r+1$ for some integer r.

Even number: A number b is said to be even if it is of the form $b = 2s$ for some integer s.

Step 4 of 5

Assume that m and n are even and odd numbers respectively. By definition of even and odd integers, there exists $r, s \in \mathbb{Z}$ satisfying $m = 2r$ and $n = 2s+1$ respectively.

Add the two expressions $m = 2r$ and $n = 2s+1$ to get,

$$m+n = (2r)+(2s+1) \quad [\because \text{By substitution}]$$
$$m+n = 2r+2s+1$$
$$m+n = 2(r+s)+1 \quad [\because \text{By algebra}]$$

Let $r+s = u$. Since $\mathbb{Z}$ is closed under addition, u is an integer.

$$m+n = 2u+1$$

Thus, $m+n$ is an odd integer by the definition of odd integer.

Step 5 of 5

From the above proof, the first blank can be filled by (a) $\boxed{\text{any odd integer}}$, the second blank can be filled by (b) $\boxed{\text{integer } r}$, the third blank can be filled by (c) $\boxed{2r+(2s+1)}$ and the fourth blank can be filled by (d) $\boxed{m+n \text{ is odd integer}}$.

Chapter 4.1, Problem 31E

Problem

a. Rewrite the theorem in three different ways: as ∀_____, if_____ then _____, as ∀ _____, _____ (without using the words *if* or *then*), and as If ____, then _____(without using an explicit universal quantifier).

b. Fill in the blanks in the proof of the theorem.

Theorem: Whenever *n* is an odd integer, 5*n*2 + 7 is even.

Proof: Suppose *n* is any *[particular but arbitrarily chosen]* odd integer.

[We must show that 5n2 + 7 is even.]

By definition of odd, *n* = __(a)__ for some integer *k*.

Then

$$\begin{aligned} 5n^2+7 &= \underline{\quad(b)\quad} && \text{by substitution} \\ &= 5(4k^2+4k+1)+7 \\ &= 20k^2+20k+12 \\ &= 2(10k^2+10k+6) && \text{by algebra.} \end{aligned}$$

Let *t* = __(c)__. Then *t* is an integer because products and sums of integers are integers.

Hence 5*n*2 + 7 = 2*t*, where *t* is an integer, and thus __(d)__ by definition of even *[as was to be shown]*.

Step-by-step solution

Step 1 of 5

Consider the given theorem.

Whenever *n* is an odd integer, $5n^2+7$ is even.

The objective is to rewrite the given theorem in three different ways and fill in the blanks for the given proof.

Step 2 of 5

(a)

1. For every integer *n*, if *n* is odd, then $5n^2+7$ is even.
2. For every odd integer *n*, $5n^2+7$ is even.
3. If *n* is any odd integer, $5n^2+7$ is even.

Step 3 of 5

(a)

Odd number: A number *a* is said to be odd if it is of the form $a=2r+1$ for some integer *r*.

Even number: A number *b* is said to be even if it is of the form $b=2s$ for some integer *s*.

Step 4 of 5

Assume that n is an odd numbers. By definition of odd integers, there exists $k\in\mathbb{Z}$ satisfying $n=2k+1$.

$$\begin{aligned} 5n^2+7 &= 5(2k+1)^2+7 && [\because \text{By substitution}] \\ 5n^2+7 &= 5(4k^2+4k+1)+7 \\ 5n^2+7 &= 20k^2+20k+12 \\ 5n^2+7 &= 2(10k^2+10k+6) && [\because \text{By algebra}] \end{aligned}$$

Let $10k^2+10k+6=t$. Since $\mathbb{Z}$ is closed under addition and multiplication, t is an integer.

$5n^2+7=2t$

Thus, $5n^2+7$ is an even integer by the definition of even integer.

Step 5 of 5

From the above proof, the first blank can be filled by (a) $\boxed{2k+1}$, the second blank can be filled by (b) $\boxed{5(2k+1)^2+7}$, the third blank can be filled by (c) $\boxed{10k^2+10k+6}$ and the fourth blank can be filled by (d) $\boxed{5n^2+7}$.

Chapter 4.2, Problem 1E

Problem

Prove the statement. In each case use only the definitions of the terms and the assumptions listed on page 161, not any previously established properties of odd and even integers. Follow the directions given in this section for writing proofs of universal statements.

For every integer *n*, if *n* is odd then 3*n* + 5 is even.

Step-by-step solution

Step 1 of 2

Consider the given statement.

For every integer *n*, if *n* is odd then $3n+5$ is even.

The objective of the problem is to prove the given statement.

Step 2 of 2

Suppose *n* is any arbitrarily chosen odd integer.

By definition of odd integer, $n=2k+1$ for some integer *k*.

Then

$$\begin{aligned} 3n+5 &= 3(2k+1)+5 && \text{by substitution} \\ &= 6k+3+5 \\ &= 6k+8 \\ &= 2(3k+4) && \text{by algebra} \end{aligned}$$

Let $t=3k+4$. Then *t* is an integer because $\mathbb{Z}$ is closed under addition and multiplication.

Hence $3n+5=2t$, where *t* is an integer, and thus $3n+5$ is even by definition of even integer.

Chapter 4.2, Problem 2E

Problem

Prove the statement. In each case use only the definitions of the terms and the assumptions listed on page 161, not any previously established properties of odd and even integers. Follow the directions given in this section for writing proofs of universal statements.

For every integer *m*, if *m* is even then 3*m* + 5 is odd.

Step-by-step solution

Step 1 of 2

Consider the given statement.

For every integer *m*, if *m* is even then $3m+5$ is odd.

The main objective of the problem is to prove the given statement.

Step 2 of 2

Suppose *m* is any arbitrarily chosen even integer.

[We must show that $3m+5$ is odd.]

By definition of even, $n=2k$ for some integer *k*.

Then

$$\begin{aligned} 3m+5 &= 3(2k)+5 && \text{by substitution} \\ &= 6k+5 \\ &= 6k+4+1 \\ &= 2(3k+2)+1 && \text{by algebra} \end{aligned}$$

Let $t=3k+2$. Then *t* is an integer as $\mathbb{Z}$ is closed under addition and multiplication.

Hence $3m+5=2t+1$, where *t* is an integer, and thus $3m+5$ is odd by definition of odd number.

Chapter 4.2, Problem 3E

Problem

Prove the statement. In each case use only the definitions of the terms and the assumptions listed on page 161, not any previously established properties of odd and even integers. Follow the directions given in this section for writing proofs of universal statements.

For every integer n, $2n - 1$ is odd.

Step-by-step solution

Step 1 of 2

Consider the given statement.

For every integer n, $2n-1$ is odd.

The main objective of the problem is to prove the given statement.

Step 2 of 2

Proof: Suppose n is any [particular but arbitrarily chosen] integer.

[We must show that $2n-1$ is odd.]

Then

$$\begin{aligned} 2n-1 &= 2n-2+1 && \text{by substitution} \\ &= 2(n-1)+1 && \text{by algebra} \end{aligned}$$

Let $t = n-1$. Then t is an integer as $\mathbb{Z}$ is closed under addition and multiplication.

Hence $2n-1 = 2t+1$, where t is an integer, and thus $2n-1$ is odd by definition of odd integer.

Chapter 4.2, Problem 4E

Problem

Prove the statement. In each case use only the definitions of the terms and the assumptions listed on page 161, not any previously established properties of odd and even integers. Follow the directions given in this section for writing proofs of universal statements.

Theorem 4.2.2: The difference of any even integer minus any odd integer is odd.

Step-by-step solution

Step 1 of 2

Consider the given statement.

The difference of any even integer minus any odd integer is odd.

The main objective of the problem is to prove the given statement.

Step 2 of 2

Proof: Suppose *m* is any even integer and *b* be any odd integer.

By the definition of even and odd, $a = 2k,\ b = 2r + 1$ for some integers *k* and *r*.

Then

$$\begin{aligned} a - b &= 2k - (2r + 1) && \text{by substitution} \\ &= 2k - 2r - 1 \\ &= 2k - 2r - 2 + 1 \\ &= 2(k - r - 1) + 1 && \text{by algebra} \end{aligned}$$

Let $t = k - r - 1$. Then *t* is an integer as $\mathbb{Z}$ is closed under addition and multiplication.

Hence $a - b = 2t + 1$, where *t* is an integer, and thus $a - b$ is odd by definition of odd.

Chapter 4.2, Problem 5E

Problem

Prove the statement. In each case use only the definitions of the terms and the assumptions listed on page 161, not any previously established properties of odd and even integers. Follow the directions given in this section for writing proofs of universal statements.

If *a* and *b* are any odd integers, then *a*2 + *b*2 is even.

Step-by-step solution

Step 1 of 2

Consider the given statement.

If *a* and *b* are any odd integers, then a^2+b^2 is even.

The main objective of the problem is to prove the given statement.

Step 2 of 2

Proof: Suppose *a* and *b* be two arbitrarily chosen odd integers.

By definition of odd, $n=2k+1, m=2r+1$ for some integers *k* and *r*.

Then

$$\begin{aligned} a^2+b^2 &= (2k+1)^2+(2r+1)^2 && \text{by substitution} \\ &= 4k^2+4k+1+4r^2+4r+1 \\ &= 4k^2+4k+4r^2+4r+2 \\ &= 2\left(2k^2+2k+2r^2+2r+1\right) && \text{by algebra} \end{aligned}$$

Let $t=2k^2+2k+2r^2+2r+1$. Then *t* is an integer as $\mathbb{Z}$ is closed under addition and multiplication.

Hence $a^2+b^2=2t$, where *t* is an integer, and thus a^2+b^2 is even by definition of even.

Chapter 4.2, Problem 6E

Problem

Prove the statement. In each case use only the definitions of the terms and the assumptions listed on page 161, not any previously established properties of odd and even integers. Follow the directions given in this section for writing proofs of universal statements.

If *k* is any odd integer and *m* is any even integer, then *k*2 + *m*2 is odd.

Step-by-step solution

Step 1 of 2

Consider the given statement.

If *k* is any odd integer and *m* is any even integer, then $k^2 + m^2$ is odd.

The main objective of the problem is to prove the given statement.

Step 2 of 2

Proof: Suppose *k* is any odd integer and *m* is any even integer.

By definition of odd, $k = 2r + 1, m = 2s$ for some integers *r, s*.

Then

$$\begin{aligned} k^2 + m^2 &= (2r+1)^2 + (2s)^2 && \text{by substitution} \\ &= 4r^2 + 4r + 1 + 4s^2 \\ &= 2\left(2r^2 + 2r + 2s^2\right) + 1 && \text{by algebra} \end{aligned}$$

Let $t = 2r^2 + 2r + 2s^2$. Then *t* is an integer as $\mathbb{Z}$ is closed under addition and multiplication.

Hence $k^2 + m^2 = 2t + 1$, where *t* is an integer, and thus $k^2 + m^2$ is odd by definition of odd number.

Chapter 4.2, Problem 7E

Problem

Prove the statement. In each case use only the definitions of the terms and the assumptions listed on page 161, not any previously established properties of odd and even integers. Follow the directions given in this section for writing proofs of universal statements.

The difference between the squares of any two consecutive integers is odd.

Step-by-step solution

Step 1 of 2

Consider the given statement.

The difference between the squares of any two consecutive integers is odd.

The main objective of the problem is to prove the given statement.

Step 2 of 2

Proof: Suppose n and $n+1$ are any two consecutive integers.

Observe that

$$\begin{aligned}(n+1)^2-n^2 &= n^2+2n+1-n^2 && \text{by substitution}\\ &= 2n+1 && \text{by algebra}\end{aligned}$$

Thus, $(n+1)^2-n^2$ is odd by definition of odd number.

Chapter 4.2, Problem 8E

Problem

Prove the statement. In each case use only the definitions of the terms and the assumptions listed on page 161, not any previously established properties of odd and even integers. Follow the directions given in this section for writing proofs of universal statements.

For any integers *m* and *n*, if *m* is even and *n* is odd then 5*m* + 3*n* is odd.

Step-by-step solution

Step 1 of 2

Consider the given statement.

For any integers *m* and *n*, if *m* is even and *n* is odd then $5m+3n$ is odd.

The main objective of the problem is to prove the given statement.

Step 2 of 2

Proof: Suppose *m* is any even integer and *n* is any odd integer.

By definition of even $m=2a$ and by definition of odd $n=2b+1$ for some integers *a*, *b*.

Then

$$\begin{aligned} 5m+3n &= 5(2a)+3(2b+1) && \text{by substitution} \\ &= 10a+6b+3 \\ &= 10a+6b+2+1 \\ &= 2(5a+3b+1)+1 && \text{by algebra} \end{aligned}$$

Let $t=5a+3b+1$. Then *t* is an integer as $\mathbb{Z}$ is closed under addition and multiplication.

Hence $5m+3n=2t+1$, where *t* is an integer, and thus $5m+3n$ is odd by definition of odd.

Chapter 4.2, Problem 9E

Problem

Prove the statement. In each case use only the definitions of the terms and the assumptions listed on page 161, not any previously established properties of odd and even integers. Follow the directions given in this section for writing proofs of universal statements.

If an integer greater than 4 is a perfect square, then the immediately preceding integer is not prime.

Step-by-step solution

Step 1 of 2

Consider the given statement.

If an integer greater than 4 is a perfect square, then the immediately preceding integer is not prime.

The main objective of the problem is to prove the given statement.

Step 2 of 2

Proof: Suppose *n* is any integer such that *n* > 4 and *n* is a perfect square.

[We must show that $n-1$ is not a prime.]

By definition of perfect square, $n = r^2$ for some positive integer *r*.

Then

$$\begin{aligned} n-1 &= r^2 - 1 && \text{by substitution} \\ &= (r-1)(r+1) && \text{by algebra} \end{aligned}$$

Now since $n = r^2$ and *n* > 4,

$$\begin{aligned} & r^2 > 4 \\ & \Rightarrow r > 2 \text{ since } r \text{ is positive.} \\ & \Rightarrow r-1 > 1 \text{ and } r+1 > 1 \end{aligned}$$

Also both *r*+1 and *r*–1 are integers because set of integers is closed under addition and subtraction.

Hence $n-1$ is a product of two positive integers greater than 1.

Thus $n-1$ is not a prime number by definition of prime number.

Chapter 4.2, Problem 10E

Problem

Prove the statement. In each case use only the definitions of the terms and the assumptions listed on page 161, not any previously established properties of odd and even integers. Follow the directions given in this section for writing proofs of universal statements.

If *n* is any even integer, then (−1)*n* = 1.

Step-by-step solution

Step 1 of 2

Consider the given statement.

If *n* is any even integer, then $(-1)^n = 1$.

The main objective of the problem is to prove the given statement.

Step 2 of 2

Proof: Suppose *n* be any arbitrarily chosen even integer.

By definition of even, $n = 2k$ for some integer *k*.

Then

$$\begin{aligned}
(-1)^n &= (-1)^{2k} && \text{by substitution} \\
&= \left((-1)^2\right)^k && \text{by laws of exponents} \\
&= 1^k \\
&= 1 && \text{by algebra}
\end{aligned}$$

Thus $(-1)^n = 1$.

Chapter 4.2, Problem 11E

Problem

Prove the statement. In each case use only the definitions of the terms and the assumptions listed on page 161, not any previously established properties of odd and even integers. Follow the directions given in this section for writing proofs of universal statements.

If n is any odd integer, then $(-1)n = -1$.

Step-by-step solution

Step 1 of 2

Consider the given statement.

If n is any odd integer, then $(-1)^n = 1$.

The main objective of the problem is to prove the given statement.

Step 2 of 2

Proof: Suppose n be an arbitrarily chosen odd integer.

By definition of even, $n = 2k+1$ for some integer k.

Then

$$\begin{aligned}
(-1)^n &= (-1)^{2k+1} && \text{by substitution} \\
&= \left((-1)^{2k}(-1)\right) && \text{by laws of exponents} \\
&= \left(\left((-1)^2\right)^k(-1)\right) && \text{by laws of exponents} \\
&= 1^k(-1) && \text{by algebra} \\
&= -1 && \text{by algebra}
\end{aligned}$$

Thus, $(-1)^n = -1$.

Chapter 4.2, Problem 12E

Problem

Prove that the statement is false.

There exists an integer $m \geq 3$ such that $m2 - 1$ is prime.

Step-by-step solution

Step 1 of 2

Consider the given statement.

There exists an integer $m \geq 3$ such that $m^2 - 1$ is prime.

The objective is to prove the given statement is false.

Step 2 of 2

In order to prove the given statement is false, prove that its negation is true.

The negation of the given statement is "For every integer $m \geq 3$, $m^2 - 1$ is not prime.
"

Proof of the negation:

Suppose m is any integer with $m \geq 3$.

[We must show that $m^2 - 1$ is not a prime.]

Then observe that $m^2 - 1 = (m+1)(m-1)$ and $m \geq 3$.

Both m+1 and m–1 are positive integers greater than 1, and each is smaller than $m2$– 1.

Hence $m^2 - 1$ is a product of two smaller positive integers, each greater than 1.

Thus $m^2 - 1$ is not a prime number by definition of prime number.

Hence the negation of the statement is proved true, which implies the given statement is false.

Chapter 4.2, Problem 13E

Problem

Prove that the statement is false.

There exists an integer *n* such that 6*n*2 + 27 is prime.

Step-by-step solution

Step 1 of 2

Consider the following "There exists an integer *n* such that $6n^2+27$ is prime."

The main objective of this problem is to prove that the above statement is incorrect.

Step 2 of 2

In order to prove the given statement is false, prove that its negation is true.

The negation of the given statement is "For all integers n , $6n^2+27$ is not a prime.".

Proof of the negation:

Let *n* be any integer.

As $n^2 \geq 0$, $6n^2+27$ is positive for every integer *n*.[products and sums of positive integers are positive.] Then,

$$6n^2+27=3\left(2n^2+9\right)$$

Observe that 3 and 2*n*2+9 are positive integers whose magnitude greater than 1, and each is smaller than 6*n*2 + 27.

Hence $6n^2+27$ is formed by multiplication of 2 smaller positive integers, each greater than 1 and thus $6n^2+27$ is not a prime number by definition of prime number.

Hence the negation of the statement is proved true, which implies the given statement is false.

Chapter 4.2, Problem 14E

Problem

Prove that the statement is false.

There exists an integer $k \geq 4$ such that $2k2 - 5k + 2$ is prime.

Step-by-step solution

Step 1 of 2

Consider the given statement.

There exists an integer $k \geq 3$ such that $2k^2 - 5k + 2$ is prime.

The objective is to prove the above statement is incorrect.

Comments (1)

The statement in the textbook is: "There exists an integer k>=4 such that 2k^2-5k+1 is prime." This solution uses the wrong assumed value for k.

Step 2 of 2

In order to prove the given statement is incorrect, prove that its negation is true.

The negation of the statement is "For every integer $k \geq 3$, $2k^2 - 5k + 2$ is not prime."

Proof of the negation:

Let k is any integer with $k \geq 3$.

$$2k^2 - 5k + 2 = (2k-1)(k-2) \text{ and } k \geq 4$$
$$k - 2 \geq 4 - 2 = 2 \text{ and } 2k - 1 \geq 8 - 1 = 7$$
$$k - 2 \geq 2 \text{ and } 2k - 1 \geq 7$$

Thus both $2k$–1 and k–2 are positive integers whose magnitude is greater than 1, and each is smaller than $2k^2 - 5k + 2$.

Thus $2k^2 - 5k + 2$ is formed by multiplying 2 smaller positive integers each of which is greater than 1. So, $2k^2 - 5k + 2$ is not a prime number by definition of prime number.

Hence the negation of the statement is proved true, which implies the given statement is false.

Chapter 4.2, Problem 15E

Problem

Find the mistakes in the "proof" shown

Theorem: For every integer k, if $k > 0$ then $k2 + 2k + 1$ is composite.

"**Proof:** For $k = 2$, $k > 0$ and $k2 + 2k + 1 = 22 + 2 \cdot 2 + 1 = 9$. And since $9 = 3 \cdot 3$, then 9 is composite. Hence the theorem is true."

Step-by-step solution

Step 1 of 2

Consider the given Theorem and its proof.

Theorem: For every integer k, if $k > 0$ then $k^2 + 2k + 1$ is composite.

Step 2 of 2

Proof: For $k = 2$, $k > 0$ and $k^2 + 2k + 1 = 2^2 + 2 \cdot 2 + 1 = 9$. And since $9 = 3 \cdot 3$, then 9 is composite. Hence the theorem is true.

The objective is to find the mistakes in the given proof.

The given proof prove the theorem is true for only case and that is for $k = 2$. A proof must show that it is true for every integer $k > 0$.

Thus, the mistake in the proof is that it doesn't shows that it is true for every integer $k > 0$.

Chapter 4.2, Problem 16E

Problem

Find the mistakes in the "proof" shown

Theorem: The difference between any odd integer and any even integer is odd.

"**Proof:** Suppose n is any odd integer, and m is any even integer. By definition of odd, $n = 2k + 1$ where k is an integer, and by definition of even, $m = 2k$ where k is an integer. Then

$n - m = (2k + 1) - 2k = 1$,

and 1 is odd. Therefore, the difference between any odd integer and any even integer is odd."

Step-by-step solution

Step 1 of 3

Consider the given Theorem and its proof.

Theorem: The difference between any odd integer and any even integer is odd.

Step 2 of 3

Proof:

Suppose n is any odd integer, and m is any even integer. By definition of odd, $n = 2k + 1$ where k is an integer, and by definition of even, $m = 2k$ where k is an integer. Then

$n - m = (2k + 1) - 2k = 1$,

and 1 is odd. Therefore, the difference between any odd integer and any even integer is odd.

Step 3 of 3

The objective is to find the mistakes in the given proof.

The given proof uses the same symbol k to represent two different numbers. The considered numbers will deduce the conclusion for only the consecutive odd and even integers. And it tells that the difference between an odd and even integer is always 1. But consider the odd number 5 and an even number 10. Their difference will be 5 and not 1.

Thus, the mistake in the proof is that it doesn't deduce a conclusion for arbitrarily chosen odd and even numbers.

Chapter 4.2, Problem 17E

Problem

Find the mistakes in the "proof" shown

Theorem: For every integer *k*, if *k* > 0 then *k*2 + 2*k* + 1 is composite.

"**Proof:** Suppose *k* is any integer such that *k* > 0. If *k*2 + 2*k* + 1 is composite, then *k*2 + 2*k* + 1 = *rs* for some integers *r* and *s* such that

$$1 < r < k^2 + 2k + 1$$

and $$1 < s < k^2 + 2k + 1.$$

Since $$k^2 + 2k + 1 = rs$$

and both *r* and *s* are strictly between 1 and *k*2 + 2*k* + 1, then *k*2 + 2*k* + 1 is not prime. Hence *k*2 + 2*k* + 1 is composite as was to be shown."

Step-by-step solution

Step 1 of 3

Consider the given Theorem and its proof.

Theorem: For every integer *k*, if *k* > 0 then $k^2 + 2k + 1$ is composite.

Step 2 of 3

Proof: Suppose *k* is any integer such that *k* > 0. If $k^2 + 2k + 1$ is composite, then $k^2 + 2k + 1 = rs$ for some integers *r* and *s* such that $1 < r < k^2 + 2k + 1$ and $1 < s < k^2 + 2k + 1$.

Since $k^2 + 2k + 1 = rs$

And both *r* and *s* are strictly between 1 and $k^2 + 2k + 1$, then $k^2 + 2k + 1$ is not prime. Hence $k^2 + 2k + 1$ is composite as was to be shown.

Step 3 of 3

The objective is to find the mistakes in the given proof.

The given proof assumes what is to be proved. The since in the third sentence only tell what happens if $k^2 + 2k + 1$ is composite. It is not established that it is composite.

Thus, the mistake in the proof is that it doesn't prove what has to be proved.

Chapter 4.2, Problem 18E

Problem

Find the mistakes in the "proof" shown

Theorem: The product of any even integer and any odd integer is even.

"**Proof:** Suppose m is any even integer and n is any odd integer. If $m \cdot n$ is even, then by definition of even there exists an integer r such that $m \cdot n = 2r$. Also since m is even, there exists an integer p such that $m = 2p$, and since n is odd there exists an integer q such that $n = 2q + 1$. Thus

$mn = (2p)(2q + 1) = 2r$,

where r is an integer. By definition of even, then, $m \cdot n$ is even, as was to be shown."

Step-by-step solution

Step 1 of 2

Consider the given theorem and its proof.

Theorem: The product of any even integer and any odd integer is even.

The objective is to find the mistakes in the given proof.

Step 2 of 2

Carefully and minutely observe the given proof.

The given proof assumes what is to be proved. The second sentence states a conclusion that would follow from the assumption $m \cdot n$ is even. The next to last sentence states this conclusion as if it were known to be true. But at this point, it were not proven the same.

Thus, the mistake in the proof is that it doesn't deduce a conclusion instead of that it assumes that it is true from the hypothesis of the theorem.

Chapter 4.2, Problem 19E

Problem

Find the mistakes in the "proof" shown

Theorem: The sum of any two even integers equals $4k$ for some integer k.

"**Proof:** Suppose m and n are any two even integers. By definition of even, $m = 2k$ for some integer k and $n = 2k$ for some integer k. By substitution,

$m + n = 2k + 2k = 4k$.

This is what was to be shown."

Step-by-step solution

Step 1 of 2

Consider the given theorem and its proof.

Theorem: The sum of any two even integers equals $4k$ for some integer k.

The objective is to find the mistakes in the given proof.

Step 2 of 2

Carefully and minutely observe the proof of the theorem.

The given proof uses the same symbol k to represent two different numbers. The considered numbers will deduce the conclusion for only the case $m = 2k = n$. And it tells that the sum of two even integers to be always $4k$ for some integer k.

Thus, the mistake in the proof is that it doesn't deduce a conclusion for arbitrarily chosen even numbers.

Chapter 4.2, Problem 20E

Problem

Determine whether the statement is true or false. Justify your answer with a proof or a counterexample, as appropriate. In each case use only the definitions of the terms and the assumptions listed on page 161, not any previously established properties.

The product of any two odd integers is odd.

Step-by-step solution

Step 1 of 2

Consider the given statement.

The product of any two odd integers is odd.

The main objective of this problem is to determine whether the statement is true or false.

Step 2 of 2

The given statement is true.

Proof: Suppose *m* and *n* are any two odd integers.

By the definition of even and odd, $m = 2k + 1,\ n = 2r + 1$ for some integers *k* and *r*.

Then

$$\begin{aligned} mn &= (2k+1)(2r+1) && \text{by substitution} \\ &= 4kr + 2k + 2r + 1 \\ &= 2(2kr + k + r) + 1 && \text{by algebra} \end{aligned}$$

Let $t = 2kr + k + r$. Then *t* is an integer as $\mathbb{Z}$ is closed under addition and multiplication.

Hence $mn = 2t + 1$, where *t* is an integer, and thus *mn* is odd by definition of odd integer.

Chapter 4.2, Problem 21E

Problem

Determine whether the statement is true or false. Justify your answer with a proof or a counterexample, as appropriate. In each case use only the definitions of the terms and the assumptions listed on page 161, not any previously established properties.

The negative of any odd integer is odd.

Step-by-step solution

Step 1 of 2

Consider the given statement.

The negative of any odd integer is odd.

The objective of this problem is to determine whether the statement is true or false.

Step 2 of 2

The given statement is true.

Proof: Suppose *m* be any odd integer.

By the definition of even and odd, $m = 2k + 1$ for some integer *k*.

Then

$$\begin{aligned} -m &= -(2k+1) && \text{by substitution} \\ &= -2k - 1 \\ &= -2k - 2 + 1 \\ &= 2(-k-1) + 1 && \text{by algebra} \end{aligned}$$

Let $t = -k - 1$. Then *t* is an integer as $\mathbb{Z}$ is closed under addition and multiplication.

Hence $-m = 2t + 1$, where *t* is an integer, and thus $-m$ is odd by definition of odd integer.

Chapter 4.2, Problem 22E

Problem

Determine whether the statement is true or false. Justify your answer with a proof or a counterexample, as appropriate. In each case use only the definitions of the terms and the assumptions listed on page 161, not any previously established properties.

For all integers *a* and *b*, 4*a* + 5*b* + 3 is even.

Step-by-step solution

Step 1 of 2

Consider the given statement.

For all integers *a* and *b*, $4a+5b+3$ is even.

The main objective of the problem is to determine whether the statement is true or false.

Step 2 of 2

The given statement is false.

Counter example:

Let $a=2$ and $b=0$.

Then

$$\begin{aligned} 4a+5b+3 &= 4(2)+5(0)+3 && \text{by substitution} \\ &= 8+0+3 \\ &= 11 \end{aligned}$$

Observe that 11 is an odd number.

Thus, $4a+5b+3$ is not even.

Chapter 4.2, Problem 23E

Problem

Determine whether the statement is true or false. Justify your answer with a proof or a counterexample, as appropriate. In each case use only the definitions of the terms and the assumptions listed on page 161, not any previously established properties.

The product of any even integer and any integer is even.

Step-by-step solution

Step 1 of 2

Consider the given statement.

The product of any even integer and any integer is even.

The main objective of this problem is to determine whether the statement is true or false.

The given statement is true.

Step 2 of 2

Proof: Suppose *m* is any even integer and *n* is any integers.

By the definition of even $m = 2k$ for some integers *k*.

Then

$$\begin{aligned} mn &= (2k)n && \text{by substitution} \\ &= 2kn \\ &= 2(kn) && \text{by algebra} \end{aligned}$$

Observe that kn is an integer as $\mathbb{Z}$ is closed under multiplication.

Thus *mn* is even by definition of even integer.

Chapter 4.2, Problem 24E

Problem

Determine whether the statement is true or false. Justify your answer with a proof or a counterexample, as appropriate. In each case use only the definitions of the terms and the assumptions listed on page 161, not any previously established properties.

If a sum of two integers is even, then one of the summands is even. (In the expression *a* + *b*, *a* and *b* are called **summands**.)

Step-by-step solution

Step 1 of 2

Consider the given statement.

If a sum of two integers is even, then one of the summands is even. (In the expression $a+b$, *a* and *b* are called summands.)

The main objective of this problem is to determine whether the statement is true or false.

Step 2 of 2

The given statement is false.

Counter example:

Let $a=3$ and $b=7$.

Then

$$\begin{aligned} a+b &= 3+7 && \text{by substitution} \\ &= 10 \\ &= 2(5) && \text{by algebra} \end{aligned}$$

Observe that 10 is an even number, but neither summand *a* nor *b* is even.

Chapter 4.2, Problem 25E

Problem

Determine whether the statement is true or false. Justify your answer with a proof or a counterexample, as appropriate. In each case use only the definitions of the terms and the assumptions listed on page 161, not any previously established properties.

The difference of any two even integers is even.

Step-by-step solution

Step 1 of 2

Consider the given statement.

The difference of any two even integers is even.

The main objective of the problem is to determine whether the statement is true or false.

Step 2 of 2

The given statement is true.

Proof: Suppose *m* and *n* be any two even integers.

By the definition of even integers, $m = 2k$ and $n = 2r$ for some integers *k* and *n*.

Then

$$\begin{aligned} m - n &= 2k - 2r && \text{by substitution} \\ &= 2(k - r) && \text{by algebra} \end{aligned}$$

Observe that $k - r$ is an integer as $\mathbb{Z}$ is closed under subtraction.

Thus, $m - n$ is even by definition of even integer.

Chapter 4.2, Problem 26E

Problem

Determine whether the statement is true or false. Justify your answer with a proof or a counterexample, as appropriate. In each case use only the definitions of the terms and the assumptions listed on page 161, not any previously established properties.

For all integers *a*, *b*, and *c*, if *a*, *b*, and *c* are consecutive, then *a* + *b* + *c* is even.

Step-by-step solution

Step 1 of 2

Consider the given statement.

For all integers *a*, *b*, and *c*, if *a*, *b*, and *c* are consecutive, then $a+b+c$ is even.

The main objective of the problem is to determine whether the statement is true or false.

Step 2 of 2

The given statement is false.

Counter example:

Let $a=4, b=5$ and $c=6$.

Then

$$\begin{aligned} a+b+c &= 4+5+6 \quad \text{by substitution} \\ &= 15 \end{aligned}$$

Observe that 15 is an odd integer.

Chapter 4.2, Problem 27E

Problem

Determine whether the statement is true or false. Justify your answer with a proof or a counterexample, as appropriate. In each case use only the definitions of the terms and the assumptions listed on page 161, not any previously established properties.

The difference of any two odd integers is even.

Step-by-step solution

Step 1 of 2

Consider the given statement.

The difference of any two odd integers is even.

The main objective of the given problem is to determine whether the statement is true or false.

Step 2 of 2

The given statement is true.

Proof: Suppose *m* and *n* be any two odd integers.

By the definition of odd $m = 2k + 1$ and $n = 2r + 1$ for some integers *k* and *n*.

Then

$$\begin{aligned} m - n &= (2k+1) - (2r+1) && \text{by substitution} \\ &= 2k + 1 - 2r - 1 \\ &= 2k - 2r \\ &= 2(k - r) && \text{by algebra} \end{aligned}$$

Let $t = k - r$. Then *t* is an integer as $\mathbb{Z}$ is closed under subtraction.

Hence $m - n = 2t$, where *t* is an integer, and thus $m - n$ is even by definition of even.

Chapter 4.2, Problem 28E

Problem

Determine whether the statement is true or false. Justify your answer with a proof or a counterexample, as appropriate. In each case use only the definitions of the terms and the assumptions listed on page 161, not any previously established properties.

For all integers *n* and *m*, if *n* − *m* is even then *n*3 − *m*3 is even.

Step-by-step solution

Step 1 of 2

Consider the given statement.

For all integers *n* and *m*, if *n* – *m* is even then $n^3 - m^3$ is even.

The objective is to determine whether the statement is true or false.

Step 2 of 2

The given statement is true.

Proof: Suppose *m* and *n* be any two integers.

Note that

$$n^3 - m^3 = (n-m)(n^2 + nm + m^2)$$

Given that *n* – m is even. By the definition of even $n - m = 2k$ for some integers *k*.

Then

$$\begin{aligned} n^3 - m^3 &= (n-m)(n^2 + nm + m^2) \\ &= 2k(n^2 + nm + m^2) \\ &= 2\left[k(n^2 + nm + m^2)\right] \end{aligned}$$

Let $t = k(n^2 + nm + m^2)$. Then *t* is an integer because $\mathbb{Z}$ is closed under addition and multiplication.

Hence $n^3 - m^3 = 2t$, where *t* is an integer, and thus $n^3 - m^3$ is even by definition of even integer.

Comments (2)

- n^3 - m^3 is not equal to (n-m)^3
- also, (n-m)^2 is equal to n^2 - 2nm + m^2

Chapter 4.2, Problem 29E

Problem

Determine whether the statement is true or false. Justify your answer with a proof or a counterexample, as appropriate. In each case use only the definitions of the terms and the assumptions listed on page 161, not any previously established properties.

For every integer *n*, if *n* is prime then (−1)*n* = −1.

Step-by-step solution

Step 1 of 2

Consider the given statement.

For every integer *n*, if *n* is prime then $(-1)^n = -1$.

The main objective of this problem is to determine whether the statement is true or false.

Step 2 of 2

The given statement is false.

Counter example:

Let $n = 2$. Then *n* is prime but consider the following.

$$\begin{aligned}(-1)^n &= (-1)^2 \\ &= 1 \\ &\neq -1\end{aligned}$$

Thus, the statement is not true.

Chapter 4.2, Problem 30E

Problem

Determine whether the statement is true or false. Justify your answer with a proof or a counterexample, as appropriate. In each case use only the definitions of the terms and the assumptions listed on page 161, not any previously established properties.

For every integer *m*, if *m* > 2 then *m*2 − 4 is composite.

Step-by-step solution

Step 1 of 2

Consider the given statement.

For every integer *m*, if $m > 2$ then $m^2 - 4$ is composite.

The main objective of the problem is to determine whether the statement is true or false.

Step 2 of 2

The given statement is false.

Counter example:

Let $m = 3$. Observe that $m > 2$ but consider the following.

$$\begin{aligned} m^2 - 4 &= 3^2 - 4 \\ &= 9 - 4 \\ &= 5 \end{aligned}$$

Observe that 5 is not composite. Thus, the statement is not true.

Chapter 4.2, Problem 31E

Problem

Determine whether the statement is true or false. Justify your answer with a proof or a counterexample, as appropriate. In each case use only the definitions of the terms and the assumptions listed on page 161, not any previously established properties.

For every integer *n*, *n*2 – *n* + 11 is a prime number.

Step-by-step solution

Step 1 of 2

Consider the given statement.

For every integer *n*, $n^2 - n + 11$ is a prime.

The main objective of the problem is to determine whether the statement is true or false.

Step 2 of 2

The given statement is false.

Counter example:

Let $m = 22$.

Then,

$$\begin{aligned} n^2 - n + 11 &= 22^2 - 22 + 11 \\ &= 11(44 - 2 + 1) \\ &= 11(43) \end{aligned}$$

Observe that $11(43)$ is not a prime. Thus the statement is not true.

Chapter 4.2, Problem 32E

Problem

Determine whether the statement is true or false. Justify your answer with a proof or a counterexample, as appropriate. In each case use only the definitions of the terms and the assumptions listed on page 161, not any previously established properties.

For every integer *n*, 4(*n*2 + *n* + 1) − 3*n*2 is a perfect square.

Step-by-step solution

Step 1 of 2

Consider the given statement.

For every integer *n*, $4\left(n^2+n+1\right)-3n^2$ is a perfect square.

The main objective of this problem is to determine whether the statement is true or false.

Step 2 of 2

The given statement is true.

Proof: Suppose *n* is any integer.

[We must show that $4\left(n^2+n+1\right)-3n^2$ is a perfect square.]

Then

$$\begin{aligned} 4\left(n^2+n+1\right)-3n^2 &= 4n^2+4n+4-3n^2 \\ &= n^2+4n+4 \\ &= (n+2)^2 && \text{by algebra} \end{aligned}$$

Let $t=n+2$. Then *t* is an integer because $\mathbb{Z}$ is closed under addition.

Hence $4\left(n^2+n+1\right)-3n^2=2t$, where *t* is an integer, and thus $4\left(n^2+n+1\right)-3n^2$ is a perfect square.

Comments (1)

Everything is right up to "Hence (statement) = t^2

Chapter 4.2, Problem 33E

Problem

Determine whether the statement is true or false. Justify your answer with a proof or a counterexample, as appropriate. In each case use only the definitions of the terms and the assumptions listed on page 161, not any previously established properties.

Every positive integer can be expressed as a sum of three or fewer perfect squares.

Step-by-step solution

Step 1 of 2

Consider the given statement.

Every positive integer can be expressed as a sum of three or fewer perfect squares.

The main objective of this problem is to determine whether the statement is true or false.

Step 2 of 2

The given statement is false.

Counter example:

Consider the integer 28. The perfect squares that could be used to add up 28 are the ones smaller than 28: 1, 4, 9, 16 and 25.

Then there are just three ways to express 28 as the sum of perfect squares.

$$28 = 25 + 1 + 1 + 1$$
$$28 = 16 + 4 + 4 + 4$$
$$28 = 9 + 9 + 9 + 1$$

Observe that none of the above 3 ways uses 3 or fewer perfect squares. Thus the statement is not true.

Chapter 4.2, Problem 34E

Problem

Determine whether the statement is true or false. Justify your answer with a proof or a counterexample, as appropriate. In each case use only the definitions of the terms and the assumptions listed on page 161, not any previously established properties.

(Two integers are **consecutive** if, and only if, one is one more than the other.) Any product of four consecutive integers is one less than a perfect square.

Step-by-step solution

Step 1 of 2

Consider the given statement.

Any product of four consecutive integers is one less than a perfect square.

The objective is to determine whether the statement is true or false.

Step 2 of 2

The given statement is true.

Proof: Suppose n–1 is the smallest of the four integers.

Then the product is $(n-1)n(n+1)(n+2)$. Let $m = n^2 + n - 1$. Observe that m is an integer because sums, products and differences of integers are integers.

$$\begin{aligned} m^2 - 1 &= \left(n^2 + n - 1\right)^2 - 1 && \text{by substitution} \\ &= n^4 + 2n^3 - n^2 - 2n + 1 - 1 \\ &= n^4 + 2n^3 - n^2 - 2n \\ &= (n-1)n(n+1)(n+2) && \text{by algebra} \end{aligned}$$

Hence the given product of four consecutive integers is one less than a perfect square.

Chapter 4.2, Problem 35E

Problem

Determine whether the statement is true or false. Justify your answer with a proof or a counterexample, as appropriate. In each case use only the definitions of the terms and the assumptions listed on page 161, not any previously established properties.

If *m* and *n* are any positive integers and *mn* is a perfect square, then *m* and *n* are perfect squares.

Step-by-step solution

Step 1 of 2

Consider the given statement.

If *m* and *n* are any positive integers and *mn* is a perfect square, then *m* and *n* are perfect squares.

The main objective of this problem is to determine whether the statement is true or false.

Step 2 of 2

The given statement is false.

Counter example:

Let $m = 12, n = 3$.

Then

$$\begin{aligned} mn &= 12 \cdot 3 && \text{By substitution} \\ &= 36 \end{aligned}$$

Observe that neither *m* nor *n* is a perfect square. Thus the statement is not true.

Chapter 4.2, Problem 36E

Problem

Determine whether the statement is true or false. Justify your answer with a proof or a counterexample, as appropriate. In each case use only the definitions of the terms and the assumptions listed on page 161, not any previously established properties.

The difference of the squares of any two consecutive integers is odd.

Step-by-step solution

Step 1 of 2

Consider the given statement.

The difference of the squares of any two consecutive integers is odd.

The main objective of the given problem is to determine whether the statement is true or false.

Step 2 of 2

The given statement is true.

Proof: Suppose m and $m+1$ be the two consecutive integers.

Note that

$$\begin{aligned}(m+1)^2 - m^2 &= m^2 + 2m + 1 - m^2 \\ &= 2m+1\end{aligned}$$

Observe that $2m+1$ is an integer because $\mathbb{Z}$ is closed under addition and multiplication.

Thus, $(m+1)^2 - m^2$ is odd by definition of odd number.

Chapter 4.2, Problem 37E

Problem

Determine whether the statement is true or false. Justify your answer with a proof or a counterexample, as appropriate. In each case use only the definitions of the terms and the assumptions listed on page 161, not any previously established properties.

For all nonnegative real numbers *a* and *b*, $\sqrt{ab} = \sqrt{a}\sqrt{b}.$ (Note that if *x* is a nonnegative real number, then there is a unique nonnegative real number *y*, denoted √*x*, such that *y*2 = *x*.)

Step-by-step solution

Step 1 of 2

Consider the given statement.

For all nonnegative real numbers *a* and *b*, $\sqrt{ab} = \sqrt{a}\sqrt{b}$.

The main objective of the problem is to determine whether the statement is true or false.

Step 2 of 2

The given statement is true.

Proof: Suppose *a* and *b* are any nonnegative real numbers. Then

For $\sqrt{a}$, there exists an unique nonnegative real number m such that $m^2 = a$.

For $\sqrt{b}$, there exists an unique nonnegative real number n such that $n^2 = b$.

Then

$$\begin{aligned} ab &= m^2 n^2 \\ &= (mn)^2 \end{aligned}$$

Thus *mn* is that unique nonnegative real number such that $(mn)^2 = ab$.

Hence

$$\begin{aligned} \sqrt{ab} &= mn \\ &= \sqrt{a}\sqrt{b} \end{aligned}$$

Thus the statement is true.

Chapter 4.2, Problem 38E

Problem

Determine whether the statement is true or false. Justify your answer with a proof or a counterexample, as appropriate. In each case use only the definitions of the terms and the assumptions listed on page 161, not any previously established properties.

For all nonnegative real numbers *a* and *b*,

$$\sqrt{a+b} = \sqrt{a} + \sqrt{b}.$$

Step-by-step solution

Step 1 of 2

Consider the given statement.

For all nonnegative real numbers *a* and *b*, $\sqrt{a+b} = \sqrt{a} + \sqrt{b}$

The main objective of the problem is to determine whether the statement is true or false.

Step 2 of 2

The given statement is false.

Counter example:

Let $a = b = 1$.

Then

$$\begin{aligned}\sqrt{a+b} &= \sqrt{1+1} \\ &= \sqrt{2}\end{aligned}$$

and

$$\begin{aligned}\sqrt{a} + \sqrt{b} &= \sqrt{1} + \sqrt{1} \\ &= 1+1 \\ &= 2\end{aligned}$$

Observe that $\sqrt{2} \neq 2$. Thus $\sqrt{a+b} \neq \sqrt{a} + \sqrt{b}$

Thus the statement is not true.

Chapter 4.2, Problem 39E

Problem

Suppose that integers *m* and *n* are perfect squares. Then $m+n+2\sqrt{mn}$ is also a perfect square. Why?

Step-by-step solution

Step 1 of 2

Consider the given statement.

Suppose that integers *m* and *n* are perfect squares. Then $m+n+2\sqrt{mn}$ is also a perfect square

The main objective of the problem is to give the reason why the given statement is true.

Step 2 of 2

Suppose *m* and *n* are perfect squares, then $m=a^2$ and $n=b^2$ for some nonnegative integer *a* and *b*.

$$\begin{aligned} m+n+2\sqrt{mn} &= a^2+b^2+2\sqrt{a^2b^2} && \text{by substitution} \\ &= a^2+b^2+2ab && a \text{ and } b \text{ are nonnegative} \\ &= (a+b)^2 && \text{by algebra} \end{aligned}$$

Let $t=a+b$. Observe that *t* is an integer as $\mathbb{Z}$ is closed under addition.

Hence $m+n+2\sqrt{mn}=t^2$ and thus $m+n+2\sqrt{mn}$ is a perfect square.

Chapter 4.2, Problem 40E

Problem

If p is a prime number, must $2p - 1$ also be prime? Prove or give a counterexample.

Step-by-step solution

Step 1 of 2

Consider the given statement.

If p is a prime number, $2^p - 1$ is also prime.

The main objective of the given problem is to prove the statement if it is true or to give counter example if it is false.

Step 2 of 2

The given statement is false.

Counter example:

Let $p = 11$.

Then

$$\begin{aligned} 2^p - 1 &= 2^{11} - 1 && \text{By substitution} \\ &= 2048 - 1 \\ &= 2047 \\ &= 89 \cdot 23 \end{aligned}$$

Observe that $2^p - 1$ can be written as the product two integers for $p = 11$.Thus the statement is not true.

Chapter 4.2, Problem 41E

Problem

If n is a nonnegative integer, must $22n + 1$ be prime? Prove or give a counterexample.

Step-by-step solution

Step 1 of 2

Consider the given statement.

If n is a nonnegative integer, $2^{2n}+1$ is also prime.

The main objective of the problem is to prove the statement if it is true or to give counter example if it is false.

Step 2 of 2

The given statement is false.

Counter example:

Let $n=5$.

Then,

$$\begin{aligned} 2^{2n}+1 &= 2^{2\times 5}+1 && \text{By substitution} \\ &= 2^{10}+1 \\ &= 1025 \\ &= 41\cdot 25 \end{aligned}$$

Observe that $2^{2n}+1$ can be written as the product two integers for $n=5$. Thus the statement is not true.

Chapter 4.3, Problem 1E

Problem

The number are all rational. Write each number as a ratio of two integers.

Exercise

$-\frac{35}{6}$

Step-by-step solution

Step 1 of 1

The objective is to write the following rational number as a ratio of two integers:

$$-\frac{35}{6}$$

As -35 and 6 are integers, write the number in $\frac{a}{b}$ form:

$$-\frac{35}{6}=-\frac{35}{6}$$

Therefore, the rational number as a ratio of two integers is $\boxed{-\frac{35}{6}}$.

Chapter 4.3, Problem 2E

Problem

The number are all rational. Write each number as a ratio of two integers.

Exercise

4.6037

Step-by-step solution

Step 1 of 1

It is given that a rational number is 4.6037

By multiplying and dividing by 10000, we get

$$=\frac{4.6037}{10000}\times 10000$$

$$=\frac{46037}{10000}$$

$\therefore$ It is a ratio of two integers

Chapter 4.3, Problem 3E

Problem

The number are all rational. Write each number as a ratio of two integers.

Exercise

$\frac{4}{5}+\frac{2}{9}$

Step-by-step solution

Step 1 of 1

The rational number is as follows.

$$\frac{4}{5}+\frac{2}{9}$$

Now the objective is to write the number as a ratio of two integers.

So, the ratio of two integers is shown below.

$$\begin{aligned}&\frac{4}{5}+\frac{2}{9}\\&=\frac{4\cdot 9+2\cdot 5}{5\cdot 9}\\&=\frac{36+10}{45}\\&=\frac{46}{45}\end{aligned}$$

Therefore, the ration is $\boxed{\frac{46}{45}}$.

Chapter 4.3, Problem 4E

Problem

The number are all rational. Write each number as a ratio of two integers.

Exercise

0.37373737…

Step-by-step solution

Step 1 of 1

It is given that a rational number is $0.373737....$

Let $x = 0.373737.....$

Then, by multiplying by 100 on both sides, we get

$100x = 37.3737.....$

Thus, $100x - x = 37.3737..... - 0.373737$

So $100x - x = 37$

Thus, $99x = 37$

And also $x = \frac{37}{99}$

Therefore, $0.373737..... = \frac{37}{99}$, which is a ratio of two non-zero integers, and thus is a rational number.

Chapter 4.3, Problem 5E

Problem

The number are all rational. Write each number as a ratio of two integers.

Exercise

0.56565656…

Step-by-step solution

Step 1 of 1

We are given the rational number $0.565656.....$

Let $x = 0.565656.....$

Then, by multiplying by 100

$100x = 56.5656.....$

Thus, $100x - x = 56.5656..... - 0.565656$

$= 56$

So $100x - x = 56$

Thus, $99x = 56$

And $x = \frac{56}{99}$

Therefore, $0.565656.... = \frac{56}{99}$, which is a ratio of two non-zero integers, and thus is a rational number.

Chapter 4.3, Problem 6E

Problem

The number are all rational. Write each number as a ratio of two integers.

Exercise

320.5492492492...

Step-by-step solution

Step 1 of 3

Consider that a number $320.5492492492...$

The objective is to write the number as a ratio of two integers.

Step 2 of 3

Write the number as the ratio of the two integers as,

Given the rational number $320.5492492492...$

Let $x = 320.5492492492...$ where the digits 492 are assumed to repeat forever.

If multiplying the number *x* both sides by 10000 obtain a number

$10000x = 3205492.492492...$

Clearly the digits 492 to **repeat** forever in the number $10000x$.

Also, we take $10x = 3205.492492492...$

Clearly the digits 492 to **repeat** forever in the number $10x$.

Step 3 of 3

Consider,

$$\begin{aligned} 10000x - 10x &= 3205492.492492... - 3205.492492492... \\ 9990x &= 3202287 \qquad \text{since the digits 492 to repeat forever} \\ x &= \frac{3202287}{9990} \end{aligned}$$

Hence, the number $x = 320.5492492492...$ can be written in the form of a ratio of two non-zero integers as $x = \frac{3202287}{9990}$.

Chapter 4.3, Problem 7E

Problem

The number are all rational. Write each number as a ratio of two integers.

Exercise

52.4672167216721…

Step-by-step solution

Step 1 of 2

Consider, the rational number $52.467216721.....$

The objective is to write the given number as a ratio of two integers.

Step 2 of 2

Let $x = 52.467216721..... \quad (1)$

Multiply both sides of (1), by 100000, then we get,

$100000x = 5246721.67216721..... \quad (2)$

Multiply equation (1) by 10 on both sides,

$10x = 524.67216721..... \quad (3)$

Subtract (3) from (2), then we get,

$$\begin{aligned} 100000x - 10x &= 5246721.67216721..... - 524.67216721..... \\ 99990x &= 5246197 \\ x &= \frac{5246197}{99990} \end{aligned}$$

Therefore, $52.467216721..... = \frac{5246197}{99990}$, which is a ratio of two non-zero integers, and thus is a rational number.

Chapter 4.3, Problem 8E

Problem

The zero product property, says that if a product of two real numbers is 0, then one of the numbers must be 0.

a. Write this property formally using quantifiers and variables.

b. Write the contrapositive of your answer to part (a).

c. Write an informal version (without quantifier symbols or variables) for your answer to part (b).

Step-by-step solution

Step 1 of 4

(a)

Zero product property: If a product of two real numbers is 0, then one of the numbers must be zero.

The objective is to rewrite this statement formally using quantifiers and variables in the form " $\forall$ ___, if ___, then ___".

The property is true for all real numbers. Therefore, the domain is the set of all real numbers.

Formal restatement: " $\forall$ real numbers *x* and *y*, if $xy = 0$, then $x = 0$ or $y = 0$".

Step 2 of 4

(b)

The objective is to write the contrapositive of the statement obtained in part (a).

If the statement is of the form " $\forall x \in D, \text{if } P(x) \text{ then } Q(x)$", then its contrapositive is the statement " $\forall x \in D, \text{if } \square\, Q(x) \text{ then } \square\, P(x)$".

The statement obtained in part (a) is " $\forall$ real numbers *x* and *y*, if $xy = 0$, then $x = 0$ or $y = 0$".

Step 3 of 4

In this statement, *P*(*x*) is " $xy = 0$",

Q(*x*) is " $x = 0$ or $y = 0$"

Hence, $\square\, P(x)$ is " $xy \neq 0$".

$\square\, Q(x)$ is " $x \neq 0$ and $y \neq 0$".

Hence, the contrapositive of the given statement is

" $\forall$ real numbers *x* and *y*, if $x \neq 0$ and $y \neq 0$, then $xy \neq 0$".

Step 4 of 4

(c)

Write the informal version of the statement " $\forall$ real numbers *x* and *y*, if $x \neq 0$ and $y \neq 0$, then $xy \neq 0$".

The statement is true for all real numbers. The hypothesis of the statement is " $x \neq 0$ and $y \neq 0$", which means that both the numbers are non-zero.

The conclusion of the statement is " $xy \neq 0$", which means that the product of the two numbers is non-zero.

Hence, the statement can be rewritten in the informal way as follows:

"If neither of the two real numbers is zero, then their product is also not zero".

OR

"The product of any two non-zero real numbers is non-zero".

Chapter 4.3, Problem 9E

Problem

Assume that *a* and *b* are both integers and that $a \neq 0$ and $b \neq 0$. Explain why $(b - a)/(ab2)$ must be a rational number.

Step-by-step solution

Step 1 of 3

The objective is to explain why $(b-a)/(ab^2)$ must be a rational number where *a* and *b* are non-zero integers.

<u>Rational number:</u> A real number *r* is rational if, and only if, it can be expressed as a quotient of two integers with a non-zero denominator. That is, *r* is rational if, and only if, there exists integers *a* and *b* such that $r = \frac{a}{b}$ and $b \neq 0$.

Step 2 of 3

The difference of two integers is also an integer. Therefore, $(b-a)$ is an integer.

Similarly, ab^2 is an integer as the product of integers is an integer.

Also, the zero product property states that, "If neither of the two real numbers is zero, then their product is also not zero".

The integers *a* and *b* are non-zero. Therefore, ab^2 is also non-zero.

Step 3 of 3

The expression $(b-a)/(ab^2)$ is expressed as a quotient of two integers $(b-a)$ and ab^2 with a non-zero denominator ab^2. Hence, $(b-a)/(ab^2)$ is a rational number.

Chapter 4.3, Problem 10E

Problem

Assume that m and n are both integers and that $n \neq 0$. Explain why $(5m + 12n)/(4n)$ must be a rational number.

Step-by-step solution

Step 1 of 2

The objective is to explain why $\frac{5m+12n}{4n}$ must be a rational number.

Suppose that m and n are both integers, and $n \neq 0$.

As $5 \text{ and } m$ are integers, so their product $5m$ is also an integer.

As $12 \text{ and } n$ are integers, so their product $12n$ is also an integer.

Also, $5m+12n$ is an integer, by addition rule of integers.

As $4 \text{ and } n$ are integers, so their product $4n$ is also an integer.

Step 2 of 2

Note that $\frac{5m+12n}{4n}$ is the ratio of two integers.

As $4 \neq 0 \text{ or } n \neq 0 \Rightarrow 4n \neq 0.$

Also, $5m+12n \neq 0.$

Thus, $\frac{5m+12n}{4n}$ is a quotient of two integers with a non-zero denominator and so it is rational.

Therefore, $\frac{5m+12n}{4n}$ is a rational number.

Chapter 4.3, Problem 11E

Problem

Prove that every integer is a rational number.

Step-by-step solution

Step 1 of 1

The objective is to prove that every integer is a rational number.

Suppose that n is an arbitrary integer.

By using the elementary rules of arithmetic rewrite n as:

$$n = \frac{n}{1}.$$

n is in the form of $\frac{a}{b}$. Here, a and b are integers and $b \neq 0$.

Thus, by definition n is a rational number.

Therefore, every integer is a rational number.

Chapter 4.3, Problem 12E

Problem

Fill in the blanks in the following proof that the square of any rational number is rational:

Proof: Suppose that r is (a). By definition of rational, $r = a/b$ for some (b) with $b \neq 0$. By substitution,

$r2$ = (c) = $a2/b2$

Since a and b are both integers, so are the products $a2$ and (d) Also $b2 = 0$ by the (e) Hence $r2$ is a ratio of two integers with a nonzero denominator, and so (f) by definition of rational.

Step-by-step solution

Step 1 of 6

(a) Any rational number (particular but arbitrarily chosen)

Step 2 of 6

(b) Integers a and b

Step 3 of 6

(c) $\left(\frac{a}{b}\right)^2$

Step 4 of 6

(d) b^2

Step 5 of 6

(e) Zero product property

Step 6 of 6

(f) r^2 is rational

Chapter 4.3, Problem 13E

Problem

Consider the statement: The negative of any rational number is rational.

a. Write the statement formally using a quantifier and a variable.

b. Determine whether the statement is true or false and justify your answer.

Step-by-step solution

Step 1 of 2

Given Statement:

The negative of any rational number is rational.

(a) $\forall$ $real\,numbers\ r$, if r is a rational number, then $-r$ is also a rational number.

Step 2 of 2

(b) The statement is true. Let r be a rational number, then there exist two integer p, q with $q \neq 0$ such that

$r = \frac{p}{q}$. Now

$$-r = -\frac{p}{q}$$

$$= \frac{p_1}{q}$$

As p is an integer, $p_1 = -p$ is also an integer. Therefore $-r$ is the ratio between two integers with no zero denominators. Hence $-r$ is also rational.

Chapter 4.3, Problem 14E

Problem

Consider the statement: The square of any rational number is a rational number.

a. Write the statement formally using a quantifier and a variable.

b. Determine whether the statement is true or false and justify your answer.

Step-by-step solution

Step 1 of 2

The statement is:

"The square of any rational number is a rational number."

(a)

The objective is to write the statement formally using quantifiers and variables.

For all real numbers, if the real number is rational, then its square is also rational.

Let r be a variable.

So, for all real numbers r, if r is rational, then r^2 is also rational.

Replace for all by the universal quantifier $\forall$ in the statement.

$\forall$ real numbers r, if r is rational, then r^2 is also a rational.

Step 2 of 2

(b)

The objective is to determine whether the statement is true or false.

Let r be a rational number, then there exist two integers p, q with $q \neq 0$ such that $r = \frac{p}{q}$.

Squaring on both sides of $r = \frac{p}{q}$.

$$\begin{aligned} r^2 &= \left(\frac{p}{q}\right)^2 \\ &= \frac{p^2}{q^2} \end{aligned}$$

As p, q are integers, then p^2, q^2 are also integers.

Thus, r^2 is the ratio of two integers with a non-zero denominator.

Hence, r^2 is also a rational number.

Therefore, the statement is $\boxed{\text{true}}$.

Comments (2)

- This solution does not match what the question asks. Q. Cubed A. Provides Square
- replace the 2 with 3 and the answer is correct

Chapter 4.3, Problem 15E

Problem

Determine which of the statement are true and which are false. Prove each true statement directly from the definitions, and give a counterexample for each false statement. In case the statement is false, determine whether a small change would make it true. If so, make the change and prove the new statement. Follow the directions for writing proofs.

Directions for Writing Proofs of Universal Statements

Think of a proof as a way to communicate a convincing argument for the truth of a mathematical statement. When you write a proof, imagine that you will be sending it to a capable classmate who has had to miss the last week or two of your course. Try to be clear and complete. Keep in mind that your classmate will see only what you actually write down, not any unexpressed thoughts behind it. Ideally, your proof will lead your classmate to understand *why* the given statement is true.

Over the years, the following rules of style have become fairly standard for writing the final versions of proofs:

1. Copy the statement of the theorem to be proved on your paper.

---

2. Clearly mark the beginning of your proof with the word Proof.

---

3. Make your proof self-contained.

This means that you should explain the meaning of each variable used in your proof in the body of the proof. Thus you will begin proofs by introducing the initial variables and stating what kind of objects they are. The first sentence of your proof would be something like "Suppose *m* and *n* are any even integers" or "Let *x* be a real number such that *x* is greater than 2." This is similar to declaring variables and their data types at the beginning of a computer program.

At a later point in your proof, you may introduce a new variable to represent a quantity that is known at that point to exist. For example, if you have assumed that a particular integer *n* is even, then you know that *n* equals 2 times some integer, and you can give this integer a name so that you can work with it concretely later in the proof. Thus if you decide to call the integer, say, *s*, you would write, "Since *n* is even, *n* = 2*s* for some integer *s*," or "since *n* is even, there exists an integer *s* such that *n* = 2*s*."

---

4. Write your proof in complete, gramatically correct sentences.

This does not mean that you should avoid using symbols and shorthand abbreviations, just that you should incorporate them into sentences. For example, the proof of Theorem contains the sentence

Then *m* + *n* = 2*r* + 2*s*

= 2(*r* + *s*).

To read such text as a sentence, read the first equals sign as "equals" and each subsequent equals sign as "which equals."

---

5. Keep your reader informed about the status of each statement in your proof.

Your reader should never be in doubt about whether something in your proof has been assumed or established or is still to be deduced. If something is assumed, preface it with a word like *Suppose* or *Assume*. If it is still to be shown, preface it with words like,*We must show that* or *In other words, we must show that*. This is especially important if you introduce a variable in rephrasing what you need to show.

---

4. Write your proof in complete, gramatically correct sentences.

This does not mean that you should avoid using symbols and shorthand abbreviations, just that you should incorporate them into sentences. For example, the proof of Theorem contains the sentence

Then *m* + *n* = 2*r* + 2*s*

= 2(*r* + *s*).

To read such text as a sentence, read the first equals sign as "equals" and each subsequent

equals sign as "which equals."

---

5. Keep your reader informed about the status of each statement in your proof.

Your reader should never be in doubt about whether something in your proof has been assumed or established or is still to be deduced. If something is assumed, preface it with a word like *Suppose* or *Assume*. If it is still to be shown, preface it with words like,*We must show that* or *In other words, we must show that*. This is especially important if you introduce a variable in rephrasing what you need to show.

---

6. Give a reason for each assertion in your proof.

Each assertion in a proof should come directly from the hypothesis of the theorem, or follow from the definition of one of the terms in the theorem, or be a result obtained earlier in the proof, or be a mathematical result that has previously been established or is agreed to be assumed. Indicate the reason for each step of your proof using phrases such as *by hypothesis, by definition of* …, and *by theorem* ….

---

7. Include the "little words and phrases" that make the logic of your arguments clear.

When writing a mathematical argument, especially a proof, indicate how each sentence is related to the previous one. Does it follow from the previous sentence or from a combination of the previous sentence and earlier ones? If so, start the sentence by stating the reason why it follows or by writing *Then*, or *Thus*, or *So*, or *Hence*, or *Therefore*, or *Consequently*, or *It follows that*, and include the reason at the end of the sentence. For instance, in the proof of Theorem, once you know that *m* is even, you can write: "By definition of even, *m* = 2*r* for some integer *r* ," or you can write, "Then *m* = 2*r* for some integer *r* by definition of even."

If a sentence expresses a new thought or fact that does not follow as an immediate consequence of the preceding statement but is needed for a later part of a proof, introduce it by writing *Observe that*, or *Note that*, or *But*, or *Now*.

Sometimes in a proof it is desirable to define a new variable in terms of previous variables. In such a case, introduce the new variable with the word *Let*. For instance, in the proof of Theorem, once it is known that *m* + *n* = 2(*r* + *s*), where *r* and *s* are integers, a new variable *t* is introduced to represent *r* + *s*. The proof goes on to say, "Let *t* = *r* + *s*. Then *t* is an integer because it is a sum of two integers."

---

8. Display equations and inequalities.

The convention is to display equations and inequalities on separate lines to increase readability, both for other people and for ourselves so that we can more easily check our work for accuracy. We follow the convention in the text of this book, but in order to save space, we violate it in a few of the exercises and in many of the solutions contained in Appendix B. So you may need to copy out some parts of solutions on scratch paper to understand them fully. Please follow the convention in your own work. Leave plenty of empty space, and don't be stingy with paper!

Theorem

The sum of any two even integers is even.

Proof:

Suppose *m* and *n* are *[particular but arbitrarily chosen]* even integers. *[We must show that m + n is even.]* By definition of even, *m* = 2*r* and *n* = 2*s* for some integers *r* and *s*. Then

m + *n* = 2*r* + 2*s* by substitution

= 2(*r* + *s*) by factoring out a 2.

Let *t* = *r* + *s*. Note that *t* is an integer because it is a sum of integers. Hence

m + *n* = 2*t* where *t* is an integer.

It follows by definition of even that *m* + *n* is even. *[This is what we needed to show.]*

Exercise

The product of any two rational numbers is a rational number.

Step-by-step solution

Step 1 of 2

This is a true statement

Proof

Suppose that *p* and *q* are rational numbers

By the definition of a rational number,

$p=\frac{a}{b}$ and $q=\frac{c}{d}$, for some integers a,b,c,d, with $b\neq 0$ and $d\neq 0$.

Step 2 of 2

Then, $p\cdot q=\frac{a}{b}\cdot\frac{c}{d}$ [by substitution]

$=\frac{ac}{bd}$ [by the rules of algebra for multiplying fractions]

Since a,c and b,d are integers, then the product ac and bd are also integers, and by the zero product property, $bd\neq 0$.

Thus, $\frac{ac}{bd}$ is a quotient of integers with a non-zero denominator, and so by the definition of a rational number, pq is rational.

Thus, the product of any two rational numbers is a rational number

Chapter 4.3, Problem 16E

Problem

Determine which of the statement are true and which are false. Prove each true statement directly from the definitions, and give a counterexample for each false statement. In case the statement is false, determine whether a small change would make it true. If so, make the change and prove the new statement. Follow the directions for writing proofs.

Directions for Writing Proofs of Universal Statements

Think of a proof as a way to communicate a convincing argument for the truth of a mathematical statement. When you write a proof, imagine that you will be sending it to a capable classmate who has had to miss the last week or two of your course. Try to be clear and complete. Keep in mind that your classmate will see only what you actually write down, not any unexpressed thoughts behind it. Ideally, your proof will lead your classmate to understand *why* the given statement is true.

Over the years, the following rules of style have become fairly standard for writing the final versions of proofs:

1. Copy the statement of the theorem to be proved on your paper.

---

2. Clearly mark the beginning of your proof with the word Proof.

---

3. Make your proof self-contained.

This means that you should explain the meaning of each variable used in your proof in the body of the proof. Thus you will begin proofs by introducing the initial variables and stating what kind of objects they are. The first sentence of your proof would be something like "Suppose m and n are any even integers" or "Let x be a real number such that x is greater than 2." This is similar to declaring variables and their data types at the beginning of a computer program.

At a later point in your proof, you may introduce a new variable to represent a quantity that is known at that point to exist. For example, if you have assumed that a particular integer n is even, then you know that n equals 2 times some integer, and you can give this integer a name so that you can work with it concretely later in the proof. Thus if you decide to call the integer, say, s, you would write, "Since n is even, $n = 2s$ for some integer s," or "since n is even, there exists an integer s such that $n = 2s$."

---

4. Write your proof in complete, gramatically correct sentences.

This does not mean that you should avoid using symbols and shorthand abbreviations, just that you should incorporate them into sentences. For example, the proof of Theorem contains the sentence

Then $m + n = 2r + 2s$

$= 2(r + s)$.

To read such text as a sentence, read the first equals sign as "equals" and each subsequent equals sign as "which equals."

---

5. Keep your reader informed about the status of each statement in your proof.

Your reader should never be in doubt about whether something in your proof has been assumed or established or is still to be deduced. If something is assumed, preface it with a word like *Suppose* or *Assume*. If it is still to be shown, preface it with words like,*We must show that* or *In other words, we must show that*. This is especially important if you introduce a variable in rephrasing what you need to show.

---

4. Write your proof in complete, gramatically correct sentences.

This does not mean that you should avoid using symbols and shorthand abbreviations, just that you should incorporate them into sentences. For example, the proof of Theorem contains the sentence

Then $m + n = 2r + 2s$

$= 2(r + s)$.

To read such text as a sentence, read the first equals sign as "equals" and each subsequent

equals sign as "which equals."

---

5. Keep your reader informed about the status of each statement in your proof.

Your reader should never be in doubt about whether something in your proof has been assumed or established or is still to be deduced. If something is assumed, preface it with a word like *Suppose* or *Assume*. If it is still to be shown, preface it with words like,*We must show that* or *In other words, we must show that*. This is especially important if you introduce a variable in rephrasing what you need to show.

---

6. Give a reason for each assertion in your proof.

Each assertion in a proof should come directly from the hypothesis of the theorem, or follow from the definition of one of the terms in the theorem, or be a result obtained earlier in the proof, or be a mathematical result that has previously been established or is agreed to be assumed. Indicate the reason for each step of your proof using phrases such as *by hypothesis, by definition of …*, and *by theorem …*

---

7. Include the "little words and phrases" that make the logic of your arguments clear.

When writing a mathematical argument, especially a proof, indicate how each sentence is related to the previous one. Does it follow from the previous sentence or from a combination of the previous sentence and earlier ones? If so, start the sentence by stating the reason why it follows or by writing *Then*, or *Thus*, or *So*, or *Hence*, or *Therefore*, or *Consequently*, or *It folows that*, and include the reason at the end of the sentence. For instance, in the proof of Theorem, once you know that m is even, you can write: "By definition of even, $m = 2r$ for some integer r," or you can write, "Then $m = 2r$ for some integer r by definition of even."

If a sentence expresses a new thought or fact that does not follow as an immediate consequence of the preceding statement but is needed for a later part of a proof, introduce it by writing *Observe that*, or *Note that*, or *But*, or *Now*.

Sometimes in a proof it is desirable to define a new variable in terms of previous variables. In such a case, introduce the new variable with the word *Let*. For instance, in the proof of Theorem, once it is known that $m + n = 2(r + s)$, where r and s are integers, a new variable t is introduced to represent $r + s$. The proof goes on to say, "Let $t = r + s$. Then t is an integer because it is a sum of two integers."

---

8. Display equations and inequalities.

The convention is to display equations and inequalities on separate lines to increase readability, both for other people and for ourselves so that we can more easily check our work for accuracy. We follow the convention in the text of this book, but in order to save space, we violate it in a few of the exercises and in many of the solutions contained in Appendix B. So you may need to copy out some parts of solutions on scratch paper to understand them fully. Please follow the convention in your own work. Leave plenty of empty space, and don't be stingy with paper!

Theorem

The sum of any two even integers is even.

Proof:

Suppose m and n are *[particular but arbitrarily chosen]* even integers. *[We must show that $m + n$ is even.]* By definition of even, $m = 2r$ and $n = 2s$ for some integers r and s. Then

$m + n = 2r + 2s$ by substitution

$= 2(r + s)$ by factoring out a 2.

Let $t = r + s$. Note that t is an integer because it is a sum of integers. Hence

$m + n = 2t$ where t is an integer.

It follows by definition of even that $m + n$ is even. *[This is what we needed to show.]*

Exercise

The quotient of any two rational numbers is a rational number.

Step-by-step solution

Step 1 of 4

Consider the statement,

"The quotient of any two rational numbers is a rational number."

The objective is to identify whether the above statement is true or false.

And prove if it is true and give counter example if it is false.

Step 2 of 4

The above statement is false.

Counter example:

Let x be any rational number and $y = 0$, then x and y are both rational, but the quotient $\frac{x}{y}$ is undefined. $\left(\text{Since } \frac{x}{0} = \infty\right)$

Therefore, the quotient of any two rational numbers is not a rational number.

Step 3 of 4

The correct statement is:

For all rational numbers x and y, if $y \neq 0$ then $\frac{x}{y}$ is rational.

Proof:

Let x, y be any two rational numbers and $y \neq 0$.

To show that $\frac{x}{y}$ is rational.

By definition of rational, $x = \frac{a}{b}, y = \frac{c}{d}$, for some integers

$a, b, c,$ and d with $b \neq 0$ and $d \neq 0$.

Thus $\frac{x}{y} = \frac{\frac{a}{b}}{\frac{c}{d}}$ By substitution

$= \frac{ad}{bc}$ By basic algebra

Step 4 of 4

Let $p = ad, q = bc$, then p and q are integers because products of integers are integers and because a, b, c, and d are all integers.

Also by the zero product property $bc \neq 0$,

$\frac{x}{y} = \frac{p}{q}$, where p and q are integers and $q \neq 0$.

Therefore, $\boxed{\frac{x}{y} \text{ is rational if } y \neq 0}$.

Hence, the statement 'the quotient of any two rational numbers is a rational number' is **false**.

Chapter 4.3, Problem 17E

Problem

Determine which of the statement are true and which are false. Prove each true statement directly from the definitions, and give a counterexample for each false statement. In case the statement is false, determine whether a small change would make it true. If so, make the change and prove the new statement. Follow the directions for writing proofs.

Directions for Writing Proofs of Universal Statements

Think of a proof as a way to communicate a convincing argument for the truth of a mathematical statement. When you write a proof, imagine that you will be sending it to a capable classmate who has had to miss the last week or two of your course. Try to be clear and complete. Keep in mind that your classmate will see only what you actually write down, not any unexpressed thoughts behind it. Ideally, your proof will lead your classmate to understand *why* the given statement is true.

Over the years, the following rules of style have become fairly standard for writing the final versions of proofs:

1. Copy the statement of the theorem to be proved on your paper.

---

2. Clearly mark the beginning of your proof with the word Proof.

---

3. Make your proof self-contained.

This means that you should explain the meaning of each variable used in your proof in the body of the proof. Thus you will begin proofs by introducing the initial variables and stating what kind of objects they are. The first sentence of your proof would be something like "Suppose m and n are any even integers" or "Let x be a real number such that x is greater than 2." This is similar to declaring variables and their data types at the beginning of a computer program.

At a later point in your proof, you may introduce a new variable to represent a quantity that is known at that point to exist. For example, if you have assumed that a particular integer n is even, then you know that n equals 2 times some integer, and you can give this integer a name so that you can work with it concretely later in the proof. Thus if you decide to call the integer, say, s, you would write, "Since n is even, $n = 2s$ for some integer s," or "since n is even, there exists an integer s such that $n = 2s$."

---

4. Write your proof in complete, gramatically correct sentences.

This does not mean that you should avoid using symbols and shorthand abbreviations, just that you should incorporate them into sentences. For example, the proof of Theorem contains the sentence

Then $m + n = 2r + 2s$

$= 2(r + s)$.

To read such text as a sentence, read the first equals sign as "equals" and each subsequent equals sign as "which equals."

---

5. Keep your reader informed about the status of each statement in your proof.

Your reader should never be in doubt about whether something in your proof has been assumed or established or is still to be deduced. If something is assumed, preface it with a word like *Suppose* or *Assume*. If it is still to be shown, preface it with words like,*We must show that* or *In other words, we must show that*. This is especially important if you introduce a variable in rephrasing what you need to show.

---

4. Write your proof in complete, gramatically correct sentences.

This does not mean that you should avoid using symbols and shorthand abbreviations, just that you should incorporate them into sentences. For example, the proof of Theorem contains the sentence

Then $m + n = 2r + 2s$

$= 2(r + s)$.

To read such text as a sentence, read the first equals sign as "equals" and each subsequent

equals sign as "which equals."

---

5. Keep your reader informed about the status of each statement in your proof.

Your reader should never be in doubt about whether something in your proof has been assumed or established or is still to be deduced. If something is assumed, preface it with a word like *Suppose* or *Assume*. If it is still to be shown, preface it with words like,*We must show that* or *In other words, we must show that*. This is especially important if you introduce a variable in rephrasing what you need to show.

---

6. Give a reason for each assertion in your proof.

Each assertion in a proof should come directly from the hypothesis of the theorem, or follow from the definition of one of the terms in the theorem, or be a result obtained earlier in the proof, or be a mathematical result that has previously been established or is agreed to be assumed. Indicate the reason for each step of your proof using phrases such as *by hypothesis, by definition of* …, and *by theorem* …

---

7. Include the "little words and phrases" that make the logic of your arguments clear.

When writing a mathematical argument, especially a proof, indicate how each sentence is related to the previous one. Does it follow from the previous sentence or from a combination of the previous sentence and earlier ones? If so, start the sentence by stating the reason why it follows or by writing *Then*, or *Thus*, or *So*, or *Hence*, or *Therefore*, or *Consequently*, or *It follows that*, and include the reason at the end of the sentence. For instance, in the proof of Theorem, once you know that m is even, you can write: "By definition of even, $m = 2r$ for some integer r ," or you can write, "Then $m = 2r$ for some integer r by definition of even."

If a sentence expresses a new thought or fact that does not follow as an immediate consequence of the preceding statement but is needed for a later part of a proof, introduce it by writing *Observe that*, or *Note that*, or *But*, or *Now*.

Sometimes in a proof it is desirable to define a new variable in terms of previous variables. In such a case, introduce the new variable with the word *Let*. For instance, in the proof of Theorem, once it is known that $m + n = 2(r + s)$, where r and s are integers, a new variable t is introduced to represent $r + s$. The proof goes on to say, "Let $t = r + s$. Then t is an integer because it is a sum of two integers."

---

8. Display equations and inequalities.

The convention is to display equations and inequalities on separate lines to increase readability, both for other people and for ourselves so that we can more easily check our work for accuracy. We follow the convention in the text of this book, but in order to save space, we violate it in a few of the exercises and in many of the solutions contained in Appendix B. So you may need to copy out some parts of solutions on scratch paper to understand them fully. Please follow the convention in your own work. Leave plenty of empty space, and don't be stingy with paper!

Theorem

The sum of any two even integers is even.

Proof:

Suppose m and n are *[particular but arbitrarily chosen]* even integers. *[We must show that $m + n$ is even.]* By definition of even, $m = 2r$ and $n = 2s$ for some integers r and s. Then

$m + n = 2r + 2s$ by substitution

$= 2(r + s)$ by factoring out a 2.

Let $t = r + s$. Note that t is an integer because it is a sum of integers. Hence

$m + n = 2t$ where t is an integer.

It follows by definition of even that $m + n$ is even. *[This is what we needed to show.]*

Exercise

The difference of any two rational numbers is a rational number.

Step-by-step solution

Step 1 of 2

Suppose p and q are rational numbers

We must show that $p-q$ is rational

Then, by the definition of rational,

$p=\frac{a}{b}$ and $q=\frac{c}{d}$, for some integers $a, b, c,$ and d, with $b \neq 0$ and $d \neq 0$.

Thus,

$p-q=\frac{a}{b}-\frac{c}{d}$ [by substitution]

$=\frac{ad-cb}{bd}$ [by basic algebra]

Step 2 of 2

Let $m=ad-cb$ and $n=bd$

Then, m and n are integers, because the products and subtraction of integers are integers, and because a, b, c, and d are all integers.

Also, $n \neq 0$, by the zero product property

Thus,

$p-q=\frac{m}{n}$, where m and n are integers, and $n \neq 0$

Therefore, $p-q$ is rational by the definition of a rational number

$\therefore$ The difference of any two rational numbers is a rational number

Chapter 4.3, Problem 18E

Problem

Determine which of the statement are true and which are false. Prove each true statement directly from the definitions, and give a counterexample for each false statement. In case the statement is false, determine whether a small change would make it true. If so, make the change and prove the new statement. Follow the directions for writing proofs.

Directions for Writing Proofs of Universal Statements

Think of a proof as a way to communicate a convincing argument for the truth of a mathematical statement. When you write a proof, imagine that you will be sending it to a capable classmate who has had to miss the last week or two of your course. Try to be clear and complete. Keep in mind that your classmate will see only what you actually write down, not any unexpressed thoughts behind it. Ideally, your proof will lead your classmate to understand *why* the given statement is true.

Over the years, the following rules of style have become fairly standard for writing the final versions of proofs:

1. Copy the statement of the theorem to be proved on your paper.

---

2. Clearly mark the beginning of your proof with the word Proof.

---

3. Make your proof self-contained.

This means that you should explain the meaning of each variable used in your proof in the body of the proof. Thus you will begin proofs by introducing the initial variables and stating what kind of objects they are. The first sentence of your proof would be something like "Suppose m and n are any even integers" or "Let x be a real number such that x is greater than 2." This is similar to declaring variables and their data types at the beginning of a computer program.

At a later point in your proof, you may introduce a new variable to represent a quantity that is known at that point to exist. For example, if you have assumed that a particular integer n is even, then you know that n equals 2 times some integer, and you can give this integer a name so that you can work with it concretely later in the proof. Thus if you decide to call the integer, say, s, you would write, "Since n is even, $n = 2s$ for some integer s," or "since n is even, there exists an integer s such that $n = 2s$."

---

4. Write your proof in complete, gramatically correct sentences.

This does not mean that you should avoid using symbols and shorthand abbreviations, just that you should incorporate them into sentences. For example, the proof of Theorem contains the sentence

Then $m + n = 2r + 2s$

$= 2(r + s)$.

To read such text as a sentence, read the first equals sign as "equals" and each subsequent equals sign as "which equals."

---

5. Keep your reader informed about the status of each statement in your proof.

Your reader should never be in doubt about whether something in your proof has been assumed or established or is still to be deduced. If something is assumed, preface it with a word like *Suppose* or *Assume*. If it is still to be shown, preface it with words like,*We must show that* or *In other words, we must show that.* This is especially important if you introduce a variable in rephrasing what you need to show.

---

4. Write your proof in complete, gramatically correct sentences.

This does not mean that you should avoid using symbols and shorthand abbreviations, just that you should incorporate them into sentences. For example, the proof of Theorem contains the sentence

Then $m + n = 2r + 2s$

$= 2(r + s)$.

To read such text as a sentence, read the first equals sign as "equals" and each subsequent

equals sign as "which equals."

---

5. Keep your reader informed about the status of each statement in your proof.

Your reader should never be in doubt about whether something in your proof has been assumed or established or is still to be deduced. If something is assumed, preface it with a word like *Suppose* or *Assume*. If it is still to be shown, preface it with words like,*We must show that* or *In other words, we must show that.* This is especially important if you introduce a variable in rephrasing what you need to show.

---

6. Give a reason for each assertion in your proof.

Each assertion in a proof should come directly from the hypothesis of the theorem, or follow from the definition of one of the terms in the theorem, or be a result obtained earlier in the proof, or be a mathematical result that has previously been established or is agreed to be assumed. Indicate the reason for each step of your proof using phrases such as *by hypothesis, by definition of…*, and *by theorem …*

---

7. Include the "little words and phrases" that make the logic of your arguments clear.

When writing a mathematical argument, especially a proof, indicate how each sentence is related to the previous one. Does it follow from the previous sentence or from a combination of the previous sentence and earlier ones? If so, start the sentence by stating the reason why it follows or by writing *Then*, or *Thus*, or *So*, or *Hence*, or *Therefore*, or *Consequently*, or *It follows that*, and include the reason at the end of the sentence. For instance, in the proof of Theorem, once you know that m is even, you can write: "By definition of even, $m = 2r$ for some integer r ," or you can write, "Then $m = 2r$ for some integer r by definition of even."

If a sentence expresses a new thought or fact that does not follow as an immediate consequence of the preceding statement but is needed for a later part of a proof, introduce it by writing *Observe that*, or *Note that*, or *But*, or *Now*.

Sometimes in a proof it is desirable to define a new variable in terms of previous variables. In such a case, introduce the new variable with the word *Let*. For instance, in the proof of Theorem, once it is known that $m + n = 2(r + s)$, where r and s are integers, a new variable t is introduced to represent $r + s$. The proof goes on to say, "Let $t = r + s$. Then t is an integer because it is a sum of two integers."

---

8. Display equations and inequalities.

The convention is to display equations and inequalities on separate lines to increase readability, both for other people and for ourselves so that we can more easily check our work for accuracy. We follow the convention in the text of this book, but in order to save space, we violate it in a few of the exercises and in many of the solutions contained in Appendix B. So you may need to copy out some parts of solutions on scratch paper to understand them fully. Please follow the convention in your own work. Leave plenty of empty space, and don't be stingy with paper!

Theorem

The sum of any two even integers is even.

Proof:

Suppose m and n are *[particular but arbitrarily chosen]* even integers. *[We must show that $m + n$ is even.]* By definition of even, $m = 2r$ and $n = 2s$ for some integers r and s. Then

$m + n = 2r + 2s$ by substitution

$= 2(r + s)$ by factoring out a 2.

Let $t = r + s$. Note that t is an integer because it is a sum of integers. Hence

$m + n = 2t$ where t is an integer.

It follows by definition of even that $m + n$ is even. *[This is what we needed to show.]*

Exercise

If r and s are any two rational numbers, then $\frac{r+s}{2}$ is rational.

Step-by-step solution

Step 1 of 2

True

Suppose r and s are rational numbers, with $r < s$

By the definition of rational,

$r = \frac{m}{n}$ and $s = \frac{p}{q}$, for some integers $m, n, p,$ and q, with $n \neq 0,\ q \neq 0$

Thus, $\frac{r+s}{2} = \frac{\frac{m}{n} + \frac{p}{q}}{2}$ [by substitution]

$= \frac{mq + np}{2nq}$ [by algebra]

Step 2 of 2

Let $a = mq + np$ and $b = 2nq$

Then a and b are integers, because the products and sums are integers, and because $m, q, n,$ and p are all integers.

Also, $n \neq 0$ and $q \neq 0$ from the zero product property

Thus,

$\frac{r+s}{2} = \frac{a}{b}$, where a and b are integers and $b \neq 0$

Therefore, $\frac{r+s}{2}$ is rational by the definition of a rational number

Chapter 4.3, Problem 19E

Problem

Determine which of the statement are true and which are false. Prove each true statement directly from the definitions, and give a counterexample for each false statement. In case the statement is false, determine whether a small change would make it true. If so, make the change and prove the new statement. Follow the directions for writing proofs.

Directions for Writing Proofs of Universal Statements

Think of a proof as a way to communicate a convincing argument for the truth of a mathematical statement. When you write a proof, imagine that you will be sending it to a capable classmate who has had to miss the last week or two of your course. Try to be clear and complete. Keep in mind that your classmate will see only what you actually write down, not any unexpressed thoughts behind it. Ideally, your proof will lead your classmate to understand *why* the given statement is true.

Over the years, the following rules of style have become fairly standard for writing the final versions of proofs:

1. Copy the statement of the theorem to be proved on your paper.

---

2. Clearly mark the beginning of your proof with the word Proof.

---

3. Make your proof self-contained.

This means that you should explain the meaning of each variable used in your proof in the body of the proof. Thus you will begin proofs by introducing the initial variables and stating what kind of objects they are. The first sentence of your proof would be something like "Suppose *m* and *n* are any even integers" or "Let *x* be a real number such that *x* is greater than 2." This is similar to declaring variables and their data types at the beginning of a computer program.

At a later point in your proof, you may introduce a new variable to represent a quantity that is known at that point to exist. For example, if you have assumed that a particular integer *n* is even, then you know that *n* equals 2 times some integer, and you can give this integer a name so that you can work with it concretely later in the proof. Thus if you decide to call the integer, say, *s*, you would write, "Since *n* is even, $n = 2s$ for some integer *s*," or "since *n* is even, there exists an integer *s* such that $n = 2s$."

---

4. Write your proof in complete, gramatically correct sentences.

This does not mean that you should avoid using symbols and shorthand abbreviations, just that you should incorporate them into sentences. For example, the proof of Theorem contains the sentence

Then $m + n = 2r + 2s$

$= 2(r + s)$.

To read such text as a sentence, read the first equals sign as "equals" and each subsequent equals sign as "which equals."

---

5. Keep your reader informed about the status of each statement in your proof.

Your reader should never be in doubt about whether something in your proof has been assumed or established or is still to be deduced. If something is assumed, preface it with a word like *Suppose* or *Assume*. If it is still to be shown, preface it with words like,*We must show that* or *In other words, we must show that*. This is especially important if you introduce a variable in rephrasing what you need to show.

---

4. Write your proof in complete, gramatically correct sentences.

This does not mean that you should avoid using symbols and shorthand abbreviations, just that you should incorporate them into sentences. For example, the proof of Theorem contains the sentence

Then $m + n = 2r + 2s$

$= 2(r + s)$.

To read such text as a sentence, read the first equals sign as "equals" and each subsequent

equals sign as "which equals."

---

5. Keep your reader informed about the status of each statement in your proof.

Your reader should never be in doubt about whether something in your proof has been assumed or established or is still to be deduced. If something is assumed, preface it with a word like *Suppose* or *Assume*. If it is still to be shown, preface it with words like,*We must show that* or *In other words, we must show that*. This is especially important if you introduce a variable in rephrasing what you need to show.

---

6. Give a reason for each assertion in your proof.

Each assertion in a proof should come directly from the hypothesis of the theorem, or follow from the definition of one of the terms in the theorem, or be a result obtained earlier in the proof, or be a mathematical result that has previously been established or is agreed to be assumed. Indicate the reason for each step of your proof using phrases such as *by hypothesis, by definition of …*, and *by theorem …*

---

7. Include the "little words and phrases" that make the logic of your arguments clear.

When writing a mathematical argument, especially a proof, indicate how each sentence is related to the previous one. Does it follow from the previous sentence or from a combination of the previous sentence and earlier ones? If so, start the sentence by stating the reason why it follows or by writing *Then*, or *Thus*, or *So*, or *Hence*, or *Therefore*, or *Consequently*, or *It follows that*, and include the reason at the end of the sentence. For instance, in the proof of Theorem, once you know that *m* is even, you can write: "By definition of even, $m = 2r$ for some integer *r* ," or you can write, "Then $m = 2r$ for some integer *r* by definition of even."

If a sentence expresses a new thought or fact that does not follow as an immediate consequence of the preceding statement but is needed for a later part of a proof, introduce it by writing *Observe that*, or *Note that*, or *But*, or *Now*.

Sometimes in a proof it is desirable to define a new variable in terms of previous variables. In such a case, introduce the new variable with the word *Let*. For instance, in the proof of Theorem, once it is known that $m + n = 2(r + s)$, where *r* and *s* are integers, a new variable *t* is introduced to represent $r + s$. The proof goes on to say, "Let $t = r + s$. Then *t* is an integer because it is a sum of two integers."

---

8. Display equations and inequalities.

The convention is to display equations and inequalities on separate lines to increase readability, both for other people and for ourselves so that we can more easily check our work for accuracy. We follow the convention in the text of this book, but in order to save space, we violate it in a few of the exercises and in many of the solutions contained in Appendix B. So you may need to copy out some parts of solutions on scratch paper to understand them fully. Please follow the convention in your own work. Leave plenty of empty space, and don't be stingy with paper!

Theorem

The sum of any two even integers is even.

Proof:

Suppose *m* and *n* are *[particular but arbitrarily chosen]* even integers. *[We must show that $m + n$ is even.]* By definition of even, $m = 2r$ and $n = 2s$ for some integers *r* and *s*. Then

$m + n = 2r + 2s$ by substitution

$= 2(r + s)$ by factoring out a 2.

Let $t = r + s$. Note that *t* is an integer because it is a sum of integers. Hence

$m + n = 2t$ where *t* is an integer.

It follows by definition of even that $m + n$ is even. *[This is what we needed to show.]*

Exercise

For all real numbers *a* and b, if $a < b$ then $a < \frac{a+b}{2} < b$.

(You may use the properties of inequalities in T17–T27.)

Properties of inequalities

T17. *Trichotomy Law* For arbitrary real numbers *a* and *b*, exactly one of the three relations *a or a = b holds.*

T18. *Transitive Law If a and b, then a.*

T19. If *a, then a + c + c.*

T20. If *a and c > 0, then ac.*

T21. If a _= 0, then a2 > 0.

T22. 1 > 0.

T23. If *a and c<0, then ac > bc.*

T24. If *a, then −a > −b. In particular, if a<0, then −a > 0.*

T25. If ab > 0, then both *a* and *b* are positive or both are negative.

T26. If *a and b, then a + b + d.*

T27. If 0 < a *and 0 < b, then 0 < ab.*

Step-by-step solution

Step 1 of 3

Consider the below statement,

"If $a < b$ then $a < \frac{a+b}{2} < b$" is true for all $a, b \in \mathbf{R}$.

The objective is to determine whether this is true or false.

Step 2 of 3

Suppose *a* and *b* are arbitrary real numbers such that $a < b$.

Use $b > a$, which is equivalent to $a < b$:

$$\begin{aligned}\frac{a+b}{2} &> \frac{a+a}{2}\\ &= \frac{2a}{2}\\ &= a\end{aligned}$$

Thus, $\frac{a+b}{2} > a$, which means that $a < \frac{a+b}{2}$ …… (1)

Step 3 of 3

Use $a < b$, which is equivalent to $a < b$:

$$\begin{aligned}\frac{a+b}{2} &< \frac{b+b}{2}\\ &= \frac{2b}{2}\\ &= b\end{aligned}$$

Thus, $\frac{a+b}{2} < b$ …… (2)

From relations (1) and (2),

$a < \frac{a+b}{2} < b$.

Chapter 4.3, Problem 20E

Problem

Use the results of exercises 18 and 19 to prove that given any two rational numbers *r* and *s* with *r* < *s*, there is another rational number between *r* and *s*. An important consequence is that there are infinitely many rational numbers in between any two distinct rational numbers. See Section 7.4.

Step-by-step solution

Step 1 of 3

Given: $r, s \in \mathbb{Q}$.

The main objective of this problem is to prove that there exists $a \in \mathbb{Q}$ satisfying $r < a < s$.

Step 2 of 3

Results Used:

Result 18: If *r* and *s* are any to rational number, then $\frac{r+s}{2}$ is rational.

Result 19: For all real numbers *a* and *b*, if *a* < *b* then $a < \frac{a+b}{2} < b$.

Step 3 of 3

Proof: Suppose $r, s \in \mathbb{Q}$.

Let $a = \frac{r+s}{2}$. Then by the result of exercise 18, *a* is rational.

So, $a = \frac{r+s}{2} \in \mathbb{Q}$

By the result of exercise 19, $r < \frac{r+s}{2} < s$.

So, $r < a < s$

Thus, there exists another rational number between *r* and *s*.

Chapter 4.3, Problem 21E

Problem

Use the properties of even and odd integers that are listed in Example to do exercise. Indicate which properties you use to justify your reasoning.

Example

Deriving Additional Results about Even and Odd Integers

Suppose that you have already proved the following properties of even and odd integers:

1. The sum, product, and difference of any two even integers are even.

2. The sum and difference of any two odd integers are even.

3. The product of any two odd integers is odd.

4. The product of any even integer and any odd integer is even.

5. The sum of any odd integer and any even integer is odd.

6. The difference of any odd integer minus any even integer is odd.

7. The difference of any even integer minus any odd integer is odd.

Use the properties listed above to prove that if *a* is any even integer and *b* is any odd integer, then $\frac{a^2+b^2+1}{2}$ is an integer.

Solution

Suppose *a* is any even integer and *b* is any odd integer. By property 3, *b*2 is odd, and by property 1, *a*2 is even. Then by property 5, *a*2 + *b*2 is odd, and because 1 is also odd, the sum (*a*2 + *b*2)+ 1 = *a*2 + *b*2 + 1 is even by property 2. Hence, by definition of even, there exists an integer *k* such that *a*2 + *b*2 + 1 = 2*k*. Dividing both sides by 2 gives $\frac{a^2+b^2+1}{2} = k$:, which is an integer. Thus $\frac{a^2+b^2+1}{2}$ is an integer *[as was to be shown]*.

Exercise

True or false? If *m* is any even integer and *n* is any odd integer, then *m*2 + 3*n* is odd. Explain.

Step-by-step solution

Step 1 of 4

The objective is to determine whether the following statement is true or false:

"If m is any even integer and n is any odd integer, then m^2+3n is odd."

Step 2 of 4

Given that, m is an even integer.

So, $m = 2k, \text{for some } k \in \mathbb{Z}$.

And n is an odd integer.

So, $n = 2k_1 + 1, \text{for some } k_1 \in \mathbb{Z}$.

Note that, the product of two even integers is even.

As

$$\begin{aligned} m \cdot m &= 2k \cdot 2k \\ m^2 &= 4k^2, \text{for some } k \in \mathbb{Z} \end{aligned}$$ is even.

Which is an even number.

Step 3 of 4

Also, product of two odd integers is odd.

As,

$$\begin{aligned} 3 \cdot n &= 3(2k_1+1) \\ 3n &= 6k_1 + 3, \text{for some } k_1 \in \mathbb{Z} \end{aligned}$$

Which is an odd integer.

Step 4 of 4

Recall the following result;

The sum of any odd integer and an even integer is odd integer.

Thus, $3n+m^2$ is odd.

As,

$$\begin{aligned} 3n+m^2 &= 6k_1+3+4k^2 \\ 3n+m^2 &= (6k_1+4k^2)+3 \\ 3n+m^2 &= 2(3k_1+2k^2)+3 \\ 3n+m^2 &= 2k_2+3 \qquad \{Here, (3k_1+2k^2) = k_2\} \end{aligned}$$

Which is an odd integer.

Therefore, the given statement is $\boxed{\text{true}}$.

Chapter 4.3, Problem 22E

Problem

Use the properties of even and odd integers that are listed in Example to do exercise. Indicate which properties you use to justify your reasoning.

Example

Deriving Additional Results about Even and Odd Integers

Suppose that you have already proved the following properties of even and odd integers:

1. The sum, product, and difference of any two even integers are even.

2. The sum and difference of any two odd integers are even.

3. The product of any two odd integers is odd.

4. The product of any even integer and any odd integer is even.

5. The sum of any odd integer and any even integer is odd.

6. The difference of any odd integer minus any even integer is odd.

7. The difference of any even integer minus any odd integer is odd.

Use the properties listed above to prove that if *a* is any even integer and *b* is any odd integer, then $\frac{a^2+b^2+1}{2}$ is an integer.

Solution

Suppose *a* is any even integer and *b* is any odd integer. By property 3, *b*2 is odd, and by property 1, *a*2 is even. Then by property 5, *a*2 + *b*2 is odd, and because 1 is also odd, the sum (*a*2 + *b*2)+ 1 = *a*2 + *b*2 + 1 is even by property 2. Hence, by definition of even, there exists an integer *k* such that *a*2 + *b*2 + 1 = 2*k*. Dividing both sides by 2 gives $\frac{a^2+b^2+1}{2} = k$, which is an integer. Thus $\frac{a^2+b^2+1}{2}$ is an integer *[as was to be shown]*.

Exercise

True or false? If *a* is any odd integer, then *a*2 + *a* is even. Explain.

Step-by-step solution

Step 1 of 3

The objective is to use the properties of odd and even integers and state if the below statement is true or false.

If *a* is any odd integer, then $a^2 + a$ is even.

Step 2 of 3

Suppose that *a* is any odd integer.

Now, we must show that $a^2 + a$ is even considering the statement to be true initially.

Since the product of any two odd integers is odd (Property 3)

From the above result, a^2 is an odd integer.

Also, *a* is an odd integer (given).

Step 3 of 3

Since the sum of two odd integer is even (Property 2).

Then, $a^2 + a$ is even.

Thus, if *a* is any odd integer, then $a^2 + a$ is even.

Hence, the given statement is true.

Chapter 4.3, Problem 23E

Problem

Use the properties of even and odd integers that are listed in Example to do exercise. Indicate which properties you use to justify your reasoning.

Example

Deriving Additional Results about Even and Odd Integers

Suppose that you have already proved the following properties of even and odd integers:

1. The sum, product, and difference of any two even integers are even.

2. The sum and difference of any two odd integers are even.

3. The product of any two odd integers is odd.

4. The product of any even integer and any odd integer is even.

5. The sum of any odd integer and any even integer is odd.

6. The difference of any odd integer minus any even integer is odd.

7. The difference of any even integer minus any odd integer is odd.

Use the properties listed above to prove that if *a* is any even integer and *b* is any odd integer, then $\frac{a^2+b^2+1}{2}$ is an integer.

Solution

Suppose *a* is any even integer and *b* is any odd integer. By property 3, *b*2 is odd, and by property 1, *a*2 is even. Then by property 5, *a*2 + *b*2 is odd, and because 1 is also odd, the sum (*a*2 + *b*2)+ 1 = *a*2 + *b*2 + 1 is even by property 2. Hence, by definition of even, there exists an integer *k* such that *a*2 + *b*2 + 1 = 2*k*. Dividing both sides by 2 gives $\frac{a^2+b^2+1}{2} = k$, which is an integer. Thus $\frac{a^2+b^2+1}{2}$ is an integer *[as was to be shown]*.

Exercise

True or false? If *k* is any even integer and *m* is any odd integer, then (*k* + 2)2 − (*m* − 1)2 is even. Explain.

Step-by-step solution

Step 1 of 1

True

Suppose that *k* is any even integer and *m* is any odd integer

We must show that $(k+2)^2-(m-1)^2$ is even

Since *k* is even and 2 is even, then $k+2$ is even, because the known result of the sum of any two even integers is even.

We know that $k+2$ is even, then $(k+2)^2$ is also even, because the product of even integers is even.

Also, *m* is odd and 1 is odd, then $m-1$ is even. It follows that $(m-1)^2$ is also even

because $(m-1)^2=(m-1)(m-1)$, and the product of any two even integers is even.

We know that $(k+2)^2$ is even, and $(m-1)^2$ is even

Then, $(k+2)^2-(m-1)^2$ is even, because the difference of any two even integers is even

Chapter 4.3, Problem 24E

Problem

Derive the statement as corollaries of Theorems 1, 2, and the results of exercises 1, 2, 3, 4, and 5.

Theorem 1

Every integer is a rational number.

Theorem 2

The sum of any two rational numbers is rational.

Proof:

Suppose r and s are rational numbers. *We must show that $r + s$ is rational.* Then, by definition of rational, $r = a/b$ and $s = c/d$ for some integers a, b, c, and d with $b \neq 0$ and $d \neq 0$. Thus

$$\begin{aligned} r + s &= \frac{a}{b} + \frac{c}{d} && \text{by substitution} \\ &= \frac{ad + bc}{bd} && \text{by basic algebra.} \end{aligned}$$

Let $p = ad + bc$ and $q = bd$. Then p and q are integers because products and sums of integers are integers and because a, b, c, and d are all integers. Also $q \neq 0$ by the zero product property. Thus

$r + s = \frac{p}{q}$ where p and q are integers and $q \neq 0$.

Therefore, $r + s$ is rational by definition of a rational number. *[This is what was to be shown.]*

Exercise 1

Fill in the blanks in the following proof that the square of any rational number is rational.

Proof: Suppose r is rat. By definition of rational, $r = a/b$ for some (a) with $b \neq 0$. By substitution,

$(r \cdot r) = (a)/(___)$ 42/12

Since a and b are (with integers), so are the products $a2$ and (a) Also $b2 = 0$ by the (e) Hence (f) is a ratio of two integers with a nonzero denominator, and so (f) by definition of rational.

Exercise 2

Consider the statement: The negative of any rational number is rational.

a. Write the statement formally using a quantifier and a variable.

---

b. Determine whether the statement is true or false and justify your answer.

Exercise 3

Consider the statement: The cube of any rational number is a rational number.

a. Write the statement formally using a quantifier and a variable.

---

b. Determine whether the statement is true or false and justify your answer.

Exercise 4

Determine which of the statement are true and which are false. Prove each true statement directly from the definitions, and give a counterexample for each false statement. In case the statement is false, determine whether a small change would make it true. If so, make the change and prove the new statement. Follow the directions for writing proofs.

Directions for Writing Proofs of Universal Statements

Think of a proof as a way to communicate a convincing argument for the truth of a mathematical statement. When you write a proof, imagine that you will be sending it to a capable classmate who has had to miss the last week or two of your course. Try to be clear and complete. Keep in mind that your classmate will see only what you actually write down, not any unexpressed thoughts behind it. Ideally, your proof will lead your classmate to understand why the given statement is true.

Over the years, the following rules of style have become fairly standard for writing the final versions of proofs:

1. Copy the statement of the theorem to be proved on your paper.

---

2. Clearly mark the beginning of your proof with the word Proof.

---

3. Make your proof self-contained.

This means that you should explain the meaning of each variable used in your proof in the body of the proof. Thus you will begin proofs by introducing the initial variables and stating what kind of objects they are. The first sentence of your proof would be something like "Suppose m and n are any even integers" or "Let x be a real number such that x is greater than 2." This is similar to declaring variables and their data types at the beginning of a computer program.

At a later point in your proof, you may introduce a new variable to represent a quantity that is known at that point to exist. For example, if you have asserted that a particular integer n is even, then you know that it equals 2 times some integer, and you can give this integer a name so that you can work with it concretely later in the proof. Thus if you decide to call the integer, say, s, you would write, "Since n is even, $n = 2s$ for some integer s." or "since n is even, there exists an integer s such that $n = 2s$."

---

4. Write your proof in complete, grammatically correct sentences.

This does not mean that you should avoid using symbols and shorthand abbreviations, just that you should incorporate them into sentences. For example, the proof of Theorem contains the sentence

There $m + n = 2r + 2s$

$= 2(r + s)$.

To read such text as a sentence, read the first equals sign as "equals" and each subsequent equals sign as "which equals."

---

5. Keep your reader informed about the status of each statement in your proof.

Your reader should never be in doubt about whether something in your proof has been assumed or established (or is still to be deduced). If something is assumed, preface it with a word like *Suppose* or *Assume*. If it is still to be shown, preface it with words like *We must show that* or *In other words, we must show that*. This is especially important if you introduce a variable in rephrasing what you need to show.

---

4. Write your proof in complete, grammatically correct sentences.

This does not mean that you should avoid using symbols and shorthand abbreviations, just that you should incorporate them into sentences. For example, the proof of Theorem contains the sentence

There $m + n = 2r + 2s$

$= 2(r + s)$.

To read such text as a sentence, read the first equals sign as "equals" and each subsequent

equals sign as "which equals."

---

5. Keep your reader informed about the status of each statement in your proof.

Your reader should never be in doubt about whether something in your proof has been assumed or established (or is still to be deduced). If something is assumed, preface it with a word like *Suppose* or *Assume*. If it is still to be shown, preface it with words like *We must show that* or *In other words, we must show that*. This is especially important if you introduce a variable in rephrasing what you need to show.

---

6. Give a reason for each assertion in your proof.

Each assertion in a proof should come directly from the hypotheses of the theorem, or follow from the definition of one of the terms in the theorem, or be a result obtained earlier in the proof, or be a mathematical result that has previously been established or is agreed to be assumed. Indicate the reason for each step of your proof using phrases such as *by hypothesis*, *by definition of* ..., and *by theorem* ...

---

7. Include the "little words and phrases" that make the logic of your arguments clear.

When writing a mathematical argument, especially a proof, indicate how each sentence is related to the previous one. Does it follow from the previous sentence or from a combination of the previous sentence and earlier ones? If so, start the sentence by stating the reason why it follows or by writing *Then*, or *Thus*, or *So*, or *Hence*, or *Therefore*, or *Consequently*, or *It follows that*, and include the reason at the end of the sentence. For instance, in the proof of Theorem, once you know that m is even, you can write, "By definition of even, $m = 2r$ for some integer r." or you can write, "Then $m = 2r$ for some integer r by definition of even."

If a sentence expresses a new thought or fact that does not follow as an immediate consequence of the preceding statement but is needed for a later part of a proof, introduce it by writing *Observe that*, or *Note that*, or *But*, or *Now*

Sometimes in a proof it is desirable to define a new variable in terms of previous variables. In such a case, introduce the new variable with the word *Let*. For instance, in the proof of Theorem, once it is known that $m + n = 2r + 2s$, where r and s are integers, a new variable t is introduced to represent $r + s$. The proof goes on to say, "Let $t = r + s$. Then t is an integer because it is a sum of two integers."

---

8. Display equations and inequalities.

The convention is to display equations and inequalities on separate lines to increase readability, both for other people and for ourselves so that we can more easily check our work for accuracy. We follow the convention in the text of this book, but in order to save space, we violate it in a few of the exercises and in many of the solutions contained in Appendix B. Do you may need to copy out some parts of solutions on scratch paper to understand them fully. Please follow the convention in your own work. Leave plenty of empty space, and don't be stingy with paper!

Theorem

The sum of any two even integers is even.

Proof:

Suppose m and n are *(particular but arbitrarily chosen) even integers. [We must show that $m + n$ is even.]* By definition of even, $m = 2r$ and $n = 2s$ for some integers r and s. Then

$m + n = 2r + 2s$ by substitution

$= 2(r + s)$ by factoring out a 2.

Let $t = r + s$. Note that t is an integer because it is a sum of integers. Hence

$m + n = 2t$ where t is an integer.

It follows by definition of even that $m + n$ is even. *[This is what we needed to show.]*

Exercise

The product of any two rational numbers is a rational number.

Exercise 5

Determine which of the statement are true and which are false. Prove each true statement directly from the definitions, and give a counterexample for each false statement. In case the statement is false, determine whether a small change would make it true. If so, make the change and prove the new statement. Follow the directions for writing proofs.

Directions for Writing Proofs of Universal Statements

Think of a proof as a way to communicate a convincing argument for the truth of a mathematical statement. When you write a proof, imagine that you will be sending it to a capable classmate who has had to miss the last week or two of your course. Try to be clear and complete. Keep in mind that your classmate will see only what you actually write down, not any unexpressed thoughts behind it. Ideally, your proof will lead your classmate to understand why the given statement is true.

Over the years, the following rules of style have become fairly standard for writing the final versions of proofs:

1. Copy the statement of the theorem to be proved on your paper.

---

2. Clearly mark the beginning of your proof with the word Proof.

---

3. Make your proof self-contained.

This means that you should explain the meaning of each variable used in your proof in the body of the proof. Thus you will begin proofs by introducing the initial variables and stating what kind of objects they are. The first sentence of your proof would be something like "Suppose m and n are any even integers" or "Let x be a real number such that x is greater than 2." This is similar to declaring variables and their data types at the beginning of a computer program.

At a later point in your proof, you may introduce a new variable to represent a quantity that is known at that point to exist. For example, if you have asserted that a particular integer n is even, then you know that it equals 2 times some integer, and you can give this integer a name so that you can work with it concretely later in the proof. Thus if you decide to call the integer, say, s, you would write, "Since n is even, $n = 2s$ for some integer s." or "since n is even, there exists an integer s such that $n = 2s$."

---

4. Write your proof in complete, grammatically correct sentences.

This does not mean that you should avoid using symbols and shorthand abbreviations, just that you should incorporate them into sentences. For example, the proof of Theorem contains the sentence

There $m + n = 2r + 2s$

$= 2(r + s)$.

To read such text as a sentence, read the first equals sign as "equals" and each subsequent equals sign as "which equals."

---

5. Keep your reader informed about the status of each statement in your proof.

Your reader should never be in doubt about whether something in your proof has been assumed or established (or is still to be deduced). If something is assumed, preface it with a word like *Suppose* or *Assume*. If it is still to be shown, preface it with words like *We must show that* or *In other words, we must show that*. This is especially important if you introduce a variable in rephrasing what you need to show.

---

4. Write your proof in complete, grammatically correct sentences.

This does not mean that you should avoid using symbols and shorthand abbreviations, just that you should incorporate them into sentences. For example, the proof of Theorem contains the sentence

There $m + n = 2r + 2s$

$= 2(r + s)$.

To read such text as a sentence, read the first equals sign as "equals" and each subsequent

equals sign as "which equals."

---

5. Keep your reader informed about the status of each statement in your proof.

Your reader should never be in doubt about whether something in your proof has been assumed or established (or is still to be deduced). If something is assumed, preface it with a word like *Suppose* or *Assume*. If it is still to be shown, preface it with words like *We must show that* or *In other words, we must show that*. This is especially important if you introduce a variable in rephrasing what you need to show.

---

6. Give a reason for each assertion in your proof.

Each assertion in a proof should come directly from the hypotheses of the theorem, or follow from the definition of one of the terms in the theorem, or be a result obtained earlier in the proof, or be a mathematical result that has previously been established or is agreed to be assumed. Indicate the reason for each step of your proof using phrases such as *by hypothesis*, *by definition of* ..., and *by theorem* ...

---

7. Include the "little words and phrases" that make the logic of your arguments clear.

When writing a mathematical argument, especially a proof, indicate how each sentence is related to the previous one. Does it follow from the previous sentence or from a combination of the previous sentence and earlier ones? If so, start the sentence by stating the reason why it follows or by writing *Then*, or *Thus*, or *So*, or *Hence*, or *Therefore*, or *Consequently*, or *It follows that*, and include the reason at the end of the sentence. For instance, in the proof of Theorem, once you know that m is even, you can write, "By definition of even, $m = 2r$ for some integer r." or you can write, "Then $m = 2r$ for some integer r by definition of even."

If a sentence expresses a new thought or fact that does not follow as an immediate consequence of the preceding statement but is needed for a later part of a proof, introduce it by writing *Observe that*, or *Note that*, or *But*, or *Now*

Sometimes in a proof it is desirable to define a new variable in terms of previous variables. In such a case, introduce the new variable with the word *Let*. For instance, in the proof of Theorem, once it is known that $m + n = 2r + 2s$, where r and s are integers, a new variable t is introduced to represent $r + s$. The proof goes on to say, "Let $t = r + s$. Then t is an integer because it is a sum of two integers."

---

8. Display equations and inequalities.

The convention is to display equations and inequalities on separate lines to increase readability, both for other people and for ourselves so that we can more easily check our work for accuracy. We follow the convention in the text of this book, but in order to save space, we violate it in a few of the exercises and in many of the solutions contained in Appendix B. Do you may need to copy out some parts of solutions on scratch paper to understand them fully. Please follow the convention in your own work. Leave plenty of empty space, and don't be stingy with paper!

Theorem

The sum of any two even integers is even.

Proof:

Suppose m and n are *(particular but arbitrarily chosen) even integers. [We must show that $m + n$ is even.]* By definition of even, $m = 2r$ and $n = 2s$ for some integers r and s. Then

$m + n = 2r + 2s$ by substitution

$= 2(r + s)$ by factoring out a 2.

Let $t = r + s$. Note that t is an integer because it is a sum of integers. Hence

$m + n = 2t$ where t is an integer.

It follows by definition of even that $m + n$ is even. *[This is what we needed to show.]*

Exercise

The difference of any two rational numbers is a rational number.

Exercise 6

For any rational numbers r and s, $2r + 3s$ is rational.

Step-by-step solution

Step 1 of 7

The statement is "For any rational numbers r and s, $2r + 3s$ is rational."

Now the objective is to derive the statement.

The derivation is shown below:

Suppose r and s are any rational numbers.

By Theorem $4.2.1$, it is said that "every integer is a rational number".

And both 2 and 3 are integers which can be expressed in quotient of two integers with a nonzero denominator.

So, both 2 and 3 are rational numbers.

Also, it is assume that r and s are rational numbers. And if and rational number is multiplied with any other rational number then the resultant number is a rational number which is proved in exercise 18.

So,

$2 \times r$ = rational number

$3 \times s$ = rational number

From the exercise 10, both $2r$ and $3s$ are rational.

And by Theorem $4.2.2$, it is said that "sum of and two rational number is a rational number".

Hence, $2r + 3s$ is rational.

Chapter 4.3, Problem 20E

Problem

Derive the statement as corollaries of Theorems 1, 2, and the results of exercises 1, 2, 3, 4, and 5.

Theorem 1

Every integer is a rational number.

Theorem 2

The sum of any two rational numbers is rational.

Proof

Suppose *r* and *s* are rational numbers. *[We must show that r + s is rational]* Then, by definition of rational, *r* = *a*/*b* and *s* = *c*/*d* for some integers *a*, *b*, *c*, and *d* with *b* ≠ 0 and *d* ≠ 0. Thus

$$\begin{aligned} r+s &= \frac{a}{b}+\frac{c}{d} && \text{by substitution} \\ &= \frac{ad+bc}{bd} && \text{by basic facts} \end{aligned}$$

Let *p* = *ad* + *bc* and *q* = *bd*. Then *p* and *q* are integers because products and sums of integers are integers and because *a*, *b*, *c*, and *d* are all integers. Also *q* ≠ 0 by the zero product property. Thus

r + *s* = $\frac{p}{q}$ where *p* and *q* are integers and *q* ≠ 0.

Therefore, *r* + *s* is rational by definition of a rational number. *[This is what was to be shown.]*

Exercise 1

Fill in the blanks in the following proof that the square of any rational number is rational:

Proof: Suppose that *r* is (a). By definition of rational, *r* = *a*/*b* for some (b) with *b* ≠ 0. By substitution,

*r*2 = (c) = *a*2/*b*2

Since *a* and *b* are both integers, so are the products *a*2 and *b*2. Also *b*2 ≠ 0 by the (e). Hence *r*2 is a ratio of two integers with a nonzero denominator, and so (f) by definition of rational.

Exercise 2

Consider the statement: 'The negative of any rational number is rational.

a. Write the statement formally using a quantifier and a variable.

b. Determine whether the statement is true or false and justify your answer.

Exercise 3

Consider the statement: 'The cube of any rational number is a rational number.

a. Write the statement formally using a quantifier and a variable.

b. Determine whether the statement is true or false and justify your answer.

Exercise 4

Determine which of the statement are true and which are false. Prove each true statement directly from the definitions, and give a counterexample for each false statement. In case the statement is false, determine whether a small change would make it true. If so, make the change and prove the new statement. Follow the directions for writing proofs.

Directions for Writing Proofs of Universal Statements

Think of a proof as a way to communicate a convincing argument for the truth of a mathematical statement. When you write a proof, imagine that you will be sending it to a capable classmate who has had to miss the last week or two of your course. Try to be clear and complete. Keep in mind that your classmate will see only what you actually write down, not any unexpressed thoughts behind it. Ideally, your proof will lead your classmate to understand why the given statement is true.

Over the years, the following rules of style have become fairly standard for writing the final versions of proofs.

1. Copy the statement of the theorem to be proved on your paper.

2. Clearly mark the beginning of your proof with the word Proof.

3. Make your proof self-contained.

This means that you should explain the meaning of each variable used in your proof in the body of the proof. Thus you will begin proofs by introducing the initial variables and stating what kind of objects they are. The first sentence of your proof would be something like "Suppose *m* and *n* are any even integers" or "Let *c* be a real number such that *c* is greater than 2." This is similar to declaring variables and their data types at the beginning of a computer program.

*At a later point in your proof, you may introduce a new variable to represent a quantity that is known at that point to exist. For example, if you have assumed that a particular integer n is even, then you know that n equals 2 times some integer, and you can give this integer a name so that you can work with it concretely later in the proof. Thus if you decide to call the integer, say, s, you would write, "Since n is even, n = 2*s* for some integer s," or "since n is even, there exists an integer s such that n = 2s."*

4. Write your proof in complete, grammatically correct sentences.

This does not mean that you should avoid using symbols and shorthand abbreviations, just that you should incorporate them into sentences. For example, the proof of Theorem contains the sentence

Then *m* + *n* = 2*r* + 2*s*

= 2(*r* + *s*).

To read such text as a sentence, read the first equals sign as "equals" and each subsequent equals sign as "which equals."

5. Keep your reader informed about the status of each statement in your proof.

Your reader should never be in doubt about whether something in your proof has been assumed or established or is still to be deduced. If something is assumed, preface it with a word like *Suppose* or *Assume*. If it is still to be shown, preface it with words like *We must show that* or *In other words*, we must show that. This is especially important if you introduce a variable in rephrasing what you need to show.

4. Write your proof in complete, grammatically correct sentences.

This does not mean that you should avoid using symbols and shorthand abbreviations, just that you should incorporate them into sentences. For example, the proof of Theorem contains the sentence

Then *m* + *n* = 2*r* + 2*s*

= 2(*r* + *s*).

To read such text as a sentence, read the first equals sign as "equals" and each subsequent

equals sign as "which equals."

6. Give a reason for each assertion in your proof.

Each assertion in a proof should come directly from the hypothesis of the theorem, or follow from the definition of one of the terms in the theorem, or be a result obtained earlier in the proof, or be a mathematical result that has previously been established or is agreed to be assumed. Indicate the reason for each step of your proof using phrases such as *by hypothesis*, *by definition of* . . . , *and by theorem* . . .

7. Include the "little words and phrases" that make the logic of your arguments clear.

When writing a mathematical argument, especially a proof, indicate how each sentence is related to the previous one. Does it follow from the previous sentence or from a combination of the previous sentence and earlier ones? If so, start the sentence by stating the reason why it follows or by writing *Then*, or *Thus*, or *So*, or *Hence*, or *Therefore*, or *Consequently*, or if follows that, and include the reason at the end of the sentence. For instance, in the proof of Theorem, once you know that m is even, you can write: "By definition of even, *m* = 2*r* for some integer *r*," or you can write, "Then *m* = 2*r* for some integer *r* by definition of even."

If a sentence expresses a new thought or fact that does not follow as an immediate consequence of the preceding statement but is needed for a later part of a proof, introduce it by writing Observe that, or Note that, or But, or Now.

*Sometimes in a proof it is desirable to define a new variable in terms of previous variables. In such a case, introduce the new variable with the word Let. For instance, in the proof of Theorem, once it is known that m + n = 2*r* + 2*s*, where *r* and *s* are integers, a new variable t is introduced to represent r + s. "The proof goes on to say, "Let *t* = *r* + *s*. Then t is an integer because it is a sum of two integers."*

8. Display equations and inequalities.

The convention is to display equations and inequalities on separate lines to increase readability, both for other people and for ourselves so that we can more easily check our work for accuracy. We follow the convention in the text of this book, but in order to save space, we relate it in a few of the exercises and in many of the solutions contained in Appendix B. So you may need to copy out some parts of solutions on scratch paper to understand them fully. Please follow the convention in your own work. Leave plenty of empty space, and don't be stingy with paper!

Theorem

The sum of any two even integers is even.

Proof

Suppose *m* and *n* are *(particular but arbitrarily chosen)* even integers. *[We must show that m + n is even.]* By definition of even, *m* = 2*r* and *n* = 2*s* for some integers *r* and *s*. Then

m + *n* = 2*r* + 2*s* by substitution

= 2(*r* + *s*) by factoring out a 2.

Let *t* = *r* + *s*. Note that *t* is an integer because it is a sum of integers. Hence

m + *n* = 2*t* where *t* is an integer.

It follows by definition of even that m + n is even. *[This is what we needed to show.]*

Exercise

The product of any two rational numbers is a rational number.

Exercise 5

Determine which of the statement are true and which are false. Prove each true statement directly from the definitions, and give a counterexample for each false statement. In case the statement is false, determine whether a small change would make it true. If so, make the change and prove the new statement. Follow the directions for writing proofs.

Directions for Writing Proofs of Universal Statements

Think of a proof as a way to communicate a convincing argument for the truth of a mathematical statement. When you write a proof, imagine that you will be sending it to a capable classmate who has had to miss the last week or two of your course. Try to be clear and complete. Keep in mind that your classmate will see only what you actually write down, not any unexpressed thoughts behind it. Ideally, your proof will lead your classmate to understand why the given statement is true.

Over the years, the following rules of style have become fairly standard for writing the final versions of proofs.

1. Copy the statement of the theorem to be proved on your paper.

2. Clearly mark the beginning of your proof with the word Proof.

3. Make your proof self-contained.

This means that you should explain the meaning of each variable used in your proof in the body of the proof. Thus you will begin proofs by introducing the initial variables and stating what kind of objects they are. The first sentence of your proof would be something like "Suppose *m* and *n* are any even integers" or "Let *c* be a real number such that *c* is greater than 2." This is similar to declaring variables and their data types at the beginning of a computer program.

*At a later point in your proof, you may introduce a new variable to represent a quantity that is known at that point to exist. For example, if you have assumed that a particular integer n is even, then you know that n equals 2 times some integer, and you can give this integer a name so that you can work with it concretely later in the proof. Thus if you decide to call the integer, say, s, you would write, "Since n is even, n = 2*s* for some integer s," or "since n is even, there exists an integer s such that n = 2s."*

4. Write your proof in complete, grammatically correct sentences.

This does not mean that you should avoid using symbols and shorthand abbreviations, just that you should incorporate them into sentences. For example, the proof of Theorem contains the sentence

Then *m* + *n* = 2*r* + 2*s*

= 2(*r* + *s*).

To read such text as a sentence, read the first equals sign as "equals" and each subsequent equals sign as "which equals."

5. Keep your reader informed about the status of each statement in your proof.

Your reader should never be in doubt about whether something in your proof has been assumed or established or is still to be deduced. If something is assumed, preface it with a word like *Suppose* or *Assume*. If it is still to be shown, preface it with words like *We must show that* or *In other words*, we must show that. This is especially important if you introduce a variable in rephrasing what you need to show.

4. Write your proof in complete, grammatically correct sentences.

This does not mean that you should avoid using symbols and shorthand abbreviations, just that you should incorporate them into sentences. For example, the proof of Theorem contains the sentence

Then *m* + *n* = 2*r* + 2*s*

= 2(*r* + *s*).

To read such text as a sentence, read the first equals sign as "equals" and each subsequent

equals sign as "which equals."

6. Keep your reader informed about the status of each statement in your proof.

Your reader should never be in doubt about whether something in your proof has been assumed or established or is still to be deduced. If something is assumed, preface it with a word like *Suppose* or *Assume*. If it is still to be shown, preface it with words like *We must show that* or *In other words*, we must show that. This is especially important if you introduce a variable in rephrasing what you need to show.

6. Give a reason for each assertion in your proof.

Each assertion in a proof should come directly from the hypothesis of the theorem, or follow from the definition of one of the terms in the theorem, or be a result obtained earlier in the proof, or be a mathematical result that has previously been established or is agreed to be assumed. Indicate the reason for each step of your proof using phrases such as *by hypothesis*, *by definition of* . . . , *and by theorem* . . .

7. Include the "little words and phrases" that make the logic of your arguments clear.

When writing a mathematical argument, especially a proof, indicate how each sentence is related to the previous one. Does it follow from the previous sentence or from a combination of the previous sentence and earlier ones? If so, start the sentence by stating the reason why it follows or by writing *Then*, or *Thus*, or *So*, or *Hence*, or *Therefore*, or *Consequently*, or if follows that, and include the reason at the end of the sentence. For instance, in the proof of Theorem, once you know that m is even, you can write: "By definition of even, *m* = 2*r* for some integer *r*," or you can write, "Then *m* = 2*r* for some integer *r* by definition of even."

If a sentence expresses a new thought or fact that does not follow as an immediate consequence of the preceding statement but is needed for a later part of a proof, introduce it by writing Observe that, or Note that, or But, or Now.

*Sometimes in a proof it is desirable to define a new variable in terms of previous variables. In such a case, introduce the new variable with the word Let. For instance, in the proof of Theorem, once it is known that m + n = 2*r* + 2*s*, where *r* and *s* are integers, a new variable t is introduced to represent r + s. "The proof goes on to say, "Let *t* = *r* + *s*. Then t is an integer because it is a sum of two integers."*

8. Display equations and inequalities.

The convention is to display equations and inequalities on separate lines to increase readability, both for other people and for ourselves so that we can more easily check our work for accuracy. We follow the convention in the text of this book, but in order to save space, we relate it in a few of the exercises and in many of the solutions contained in Appendix B. So you may need to copy out some parts of solutions on scratch paper to understand them fully. Please follow the convention in your own work. Leave plenty of empty space, and don't be stingy with paper!

Theorem

The sum of any two even integers is even.

Proof

Suppose *m* and *n* are *(particular but arbitrarily chosen)* even integers. *[We must show that m + n is even.]* By definition of even, *m* = 2*r* and *n* = 2*s* for some integers *r* and *s*. Then

m + *n* = 2*r* + 2*s* by substitution

= 2(*r* + *s*) by factoring out a 2.

Let *t* = *r* + *s*. Note that *t* is an integer because it is a sum of integers. Hence

m + *n* = 2*t* where *t* is an integer.

It follows by definition of even that m + n is even. *[This is what we needed to show.]*

Exercise

The difference of any two rational numbers is a rational number.

Exercise 6

If *r* is any rational number, then 3*r*2 − 2*r* + 4 is rational.

Step-by-step solution

Step 1 of 4

Consider the expression $3r^2-2r+4$ with *r* be any rational number.

The objective is to show that the given expression is a rational number.

Step 2 of 4

Since *r* is a rational number. This gives r^2 is also a rational number.

Recall the following result:

Every integer is a rational number.

Step 3 of 4

Since 3 is an integer then 3 is a rational number by above result.

This also gives $3r^2$ is a rational number.

Since 2 is rational and *r* is rational then 2*r* is rational.

Step 4 of 4

Recall the following theorem:

Given any rational number $r, -r$ is also a rational number.

Given any two rational numbers *r* and *s*. Then $r+s$ is also rational number.

This gives $-2r$ is a rational number.

Since $3r^2$ and 4 are rational numbers then $3r^2+(-2r)+4$ is rational.

Hence, $3r^2-2r+4$ is a rational number.

Chapter 4.3, Problem 28E

Problem

Derive the statement as corollaries of Theorems 1, 2, and the results of exercises 1, 2, 3, 4, and 5.

Theorem 1

Every integer is a rational number.

Theorem 2

The sum of any two rational numbers is rational.

Proof:

Suppose r and s are rational numbers. *[We must show that $r + s$ is rational.]* Then, by definition of rational, $r = a/b$ and $s = c/d$ for some integers a, b, c, and d with $b \neq 0$ and $d \neq 0$. Thus

$$\begin{aligned} r + s &= \frac{a}{b} + \frac{c}{d} && \text{by substitution} \\ &= \frac{ad + bc}{bd} && \text{by basic algebra} \end{aligned}$$

Let $p = ad + bc$ and $q = bd$. Then p and q are integers because products and sums of integers are integers and because a, b, c, and d are all integers. Also $q \neq 0$ by the zero product property. Thus

$r + s = \frac{p}{q}$ where p and q are integers and $q \neq 0$.

Therefore, $r + s$ is rational by definition of a rational number. *[This is what was to be shown.]*

Exercise 1

Fill in the blanks in the following proof that the square of any rational number is rational.

Proof: Suppose that r is (a). By definition of rational, $r =$ a/b for some (b) with $b \neq 0$. By substitution,

$r2 = (c) = a2/b2$

Since a and b are both integers, so are the products $a2$ and $b2$. Also $b2 \neq 0$ by the (d). Hence $r2$ is a ratio of two integers with a nonzero denominator, and so (f) by definition of rational.

Exercise 2

Consider the statement: The negative of any rational number is rational.

a. Write the statement formally using a quantifier and a variable.

---

b. Determine whether the statement is true or false and justify your answer.

Exercise 3

Consider the statement: The cube of any rational number is a rational number.

a. Write the statement formally using a quantifier and a variable.

---

b. Determine whether the statement is true or false and justify your answer.

Exercise 4

Determine which of the statement are true and which are false. Prove each true statement directly from the definitions, and give a counterexample for each false statement. In case the statement is false, determine whether a small change would make it true. If so, make the change and prove the new statement. Follow the directions for writing proofs.

Directions for Writing Proofs of Universal Statements

Think of a proof as a way to communicate a convincing judgement for the truth of a mathematical statement. When you write a proof, imagine that you will be sending it to a capable classmate who has had to miss the last week or two of your course. Try to be clear and complete. Keep in mind that your classmate will see only what you actually write down, not any unexpressed thoughts behind it. Ideally, your proof will lead your classmate to understand why the given statement is true.

Over the years, the following rules of style have become fairly standard for writing the final versions of proofs:

1. Copy the statement of the theorem to be proved on your paper.

---

2. Clearly mark the beginning of your proof with the word Proof.

---

3. Make your proof self-contained.

This means that you should explain the meaning of each variable used in your proof in the body of the proof. Thus you will begin proofs by introducing the initial variables and stating what kind of objects they are. The first sentence of your proof would be something like: "*Suppose m and n are any even integers*" or "*Let x be a real number such that x is greater than 2.*" This is similar to declaring variables and their data types at the beginning of a computer program.

At a later point in your proof, you may introduce a new variable to represent a quantity that is known at that point to exist. For example, if you have assumed that a particular integer n is even, then you know that n equals 2 times some integer, and you can give this integer a name so that you can work with it concretely later in the proof. Thus if you decide to call the integer, say, p, you would write, "Since n is even, $n = 2p$ for some integer p," or "since n is even, there exists an integer p such that $n = 2p$."

---

4. Write your proof in complete, grammatically correct sentences.

This does not mean that you should avoid using symbols and shorthand abbreviations, just that you should incorporate them into sentences. For example, the proof of Theorem contains the sentence:

Then $m + n = 2r + 2s$

$= 2(r + s)$.

To read such text as a sentence, read the first equals sign as "equals" and each subsequent equals sign as "which equals."

---

5. Keep your reader informed about the status of each statement in your proof.

Your reader should never be in doubt about whether something in your proof has been assumed or established or is still to be deduced. If something is assumed, preface it with a word like *Suppose* or *Assume*. If it is still to be shown, preface it with words like *We must show that* or *In other words, we must show that*. This is especially important if you introduce a variable in rephrasing what you need to show.

---

4. Write your proof in complete, grammatically correct sentences.

This does not mean that you should avoid using symbols and shorthand abbreviations, just that you should incorporate them into sentences. For example, the proof of Theorem contains the sentence:

Then $m + n = 2r + 2s$

$= 2(r + s)$.

To read such text as a sentence, read the first equals sign as "equals" and each subsequent

equals sign as "which equals."

---

5. Keep your reader informed about the status of each statement in your proof.

Your reader should never be in doubt about whether something in your proof has been assumed or established or is still to be deduced. If something is assumed, preface it with a word like *Suppose* or *Assume*. If it is still to be shown, preface it with words like *We must show that* or *In other words, we must show that*. This is especially important if you introduce a variable in rephrasing what you need to show.

---

6. Give a reason for each assertion in your proof.

Each assertion in a proof should come directly from the hypothesis of the theorem, or follow from the definition of one of the terms in the theorem, or be a result obtained earlier in the proof, or be a mathematical result that has previously been established or is agreed to be assumed. Indicate the reason for each step of your proof using phrases such as *by hypothesis*, *by definition of ……*, and *by theorem ……*

---

7. Include the "little words and phrases" that make the logic of your arguments clear.

When writing a mathematical argument, especially a proof, indicate how each sentence is related to the previous one. Does it follow from the previous sentence or from a combination of the previous sentence and earlier ones? If so, start the sentence by stating the reason why. It follows or by writing *Then*, or *Thus*, or *So*, or *Hence*, or *Therefore*, or *Consequently*, or *It follows that*, and include the reason at the end of the sentence. For instance, in the proof of Theorem, once you know that m is even, you can write: "By definition of even, $m = 2r$ for some integer r." or you can write, "Then $m = 2r$ for some integer r by definition of even."

If a sentence expresses a new thought or fact that does not follow as an immediate consequence of the preceding statement but is needed for a later part of a proof, introduce it by writing *Observe that*, or *Note that*, or *But*, or *Now*.

Sometimes in a proof it is desirable to define a new variable in terms of previous variables. In such a case, introduce the new variable with the word *Let*. For instance, in the proof of Theorem, once it is known that $m = k = 2p + q$, where r and s are integers, a new variable t is introduced to represent $r + s$. The proof goes on to say, "Let $t = r + s$. Then t is an integer because it is a sum of two integers."

8. Display equations and inequalities.

The convention is to display equations and inequalities on separate lines to increase readability, both for other people and for ourselves so that we can more easily check our work for accuracy. We follow the convention in the text of this book, but in order to save space, we violate it in a few of the exercises and in many of the solutions contained in Appendix B. So you may need to copy out some parts of solutions on scratch paper to understand them fully. Please follow the convention in your own work. Leave plenty of empty space, and don't be stingy with paper!

Theorem

The sum of any two even integers is even.

Proof:

Suppose m and n are *(particular but arbitrarily chosen)* even integers. *[We must show that $m + n$ is even.]* By definition of even, $m = 2r$ and $n = 2s$ for some integers r and s. Then

$m + n = 2r + 2s$ by substitution

$= 2(r + s)$ by factoring out a 2.

Let $t = r + s$. Note that t is an integer because it is a sum of integers. Hence

$m + n = 2t$ where t is an integer.

It follows by definition of even that $m + n$ is even. *[This is what we needed to show.]*

Exercise:

The product of any two rational numbers is a rational number.

Exercise 5

Determine which of the statement are true and which are false. Prove each true statement directly from the definitions, and give a counterexample for each false statement. In case the statement is false, determine whether a small change would make it true. If so, make the change and prove the new statement. Follow the directions for writing proofs.

Directions for Writing Proofs of Universal Statements

Think of a proof as a way to communicate a convincing argument for the truth of a mathematical statement. When you write a proof, imagine that you will be sending it to a capable classmate who has had to miss the last week or two of your course. Try to be clear and complete. Keep in mind that your classmate will see only what you actually write down, not any unexpressed thoughts behind it. Ideally, your proof will lead your classmate to understand why the given statement is true.

Over the years, the following rules of style have become fairly standard for writing the final versions of proofs:

1. Copy the statement of the theorem to be proved on your paper.

---

2. Clearly mark the beginning of your proof with the word Proof.

---

3. Make your proof self-contained.

This means that you should explain the meaning of each variable used in your proof in the body of the proof. Thus you will begin proofs by introducing the initial variables and stating what kind of objects they are. The first sentence of your proof would be something like: "*Suppose m and n are any even integers*" or "*Let x be a real number such that x is greater than 2.*" This is similar to declaring variables and their data types at the beginning of a computer program.

At a later point in your proof, you may introduce a new variable to represent a quantity that is known at that point to exist. For example, if you have assumed that a particular integer n is even, then you know that n equals 2 times some integer, and you can give this integer a name so that you can work with it concretely later in the proof. Thus if you decide to call the integer, say, p, you would write, "Since n is even, $n = 2p$ for some integer p," or "since n is even, there exists an integer p such that $n = 2p$."

---

4. Write your proof in complete, grammatically correct sentences.

This does not mean that you should avoid using symbols and shorthand abbreviations, just that you should incorporate them into sentences. For example, the proof of Theorem contains the sentence:

Then $m + n = 2r + 2s$

$= 2(r + s)$.

To read such text as a sentence, read the first equals sign as "equals" and each subsequent equals sign as "which equals."

---

5. Keep your reader informed about the status of each statement in your proof.

Your reader should never be in doubt about whether something in your proof has been assumed or established or is still to be deduced. If something is assumed, preface it with a word like *Suppose* or *Assume*. If it is still to be shown, preface it with words like *We must show that* or *In other words, we must show that*. This is especially important if you introduce a variable in rephrasing what you need to show.

---

4. Write your proof in complete, grammatically correct sentences.

This does not mean that you should avoid using symbols and shorthand abbreviations, just that you should incorporate them into sentences. For example, the proof of Theorem contains the sentence:

Then $m + n = 2r + 2s$

$= 2(r + s)$.

To read such text as a sentence, read the first equals sign as "equals" and each subsequent

equals sign as "which equals."

---

5. Keep your reader informed about the status of each statement in your proof.

Your reader should never be in doubt about whether something in your proof has been assumed or established or is still to be deduced. If something is assumed, preface it with a word like *Suppose* or *Assume*. If it is still to be shown, preface it with words like *We must show that* or *In other words, we must show that*. This is especially important if you introduce a variable in rephrasing what you need to show.

---

6. Give a reason for each assertion in your proof.

Each assertion in a proof should come directly from the hypothesis of the theorem, or follow from the definition of one of the terms in the theorem, or be a result obtained earlier in the proof, or be a mathematical result that has previously been established or is agreed to be assumed. Indicate the reason for each step of your proof using phrases such as *by hypothesis*, *by definition of ……*, and *by theorem ……*

---

7. Include the "little words and phrases" that make the logic of your arguments clear.

When writing a mathematical argument, especially a proof, indicate how each sentence is related to the previous one. Does it follow from the previous sentence or from a combination of the previous sentence and earlier ones? If so, start the sentence by stating the reason why. It follows or by writing *Then*, or *Thus*, or *So*, or *Hence*, or *Therefore*, or *Consequently*, or *It follows that*, and include the reason at the end of the sentence. For instance, in the proof of Theorem, once you know that m is even, you can write: "By definition of even, $m = 2r$ for some integer r." or you can write, "Then $m = 2r$ for some integer r by definition of even."

If a sentence expresses a new thought or fact that does not follow as an immediate consequence of the preceding statement but is needed for a later part of a proof, introduce it by writing *Observe that*, or *Note that*, or *But*, or *Now*.

Sometimes in a proof it is desirable to define a new variable in terms of previous variables. In such a case, introduce the new variable with the word *Let*. For instance, in the proof of Theorem, once it is known that $m = k = 2p + q$, where r and s are integers, a new variable t is introduced to represent $r + s$. The proof goes on to say, "Let $t = r + s$. Then t is an integer because it is a sum of two integers."

8. Display equations and inequalities.

The convention is to display equations and inequalities on separate lines to increase readability, both for other people and for ourselves so that we can more easily check our work for accuracy. We follow the convention in the text of this book, but in order to save space, we violate it in a few of the exercises and in many of the solutions contained in Appendix B. So you may need to copy out some parts of solutions on scratch paper to understand them fully. Please follow the convention in your own work. Leave plenty of empty space, and don't be stingy with paper!

Theorem

The sum of any two even integers is even.

Proof:

Suppose m and n are *(particular but arbitrarily chosen)* even integers. *[We must show that $m + n$ is even.]* By definition of even, $m = 2r$ and $n = 2s$ for some integers r and s. Then

$m + n = 2r + 2s$ by substitution

$= 2(r + s)$ by factoring out a 2.

Let $t = r + s$. Note that t is an integer because it is a sum of integers. Hence

$m + n = 2t$ where t is an integer.

It follows by definition of even that $m + n$ is even. *[This is what we needed to show.]*

Exercise:

The difference of any two rational numbers is a rational number.

Exercise 6

For any rational number a, $5a3 + 6a2 - 7$ is rational.

Step-by-step solution

Step 1 of 5

The objective is to show that for any rational number a, $5a^3 + 6a^2 - 7$ is rational.

As every integer is a rational number, then 5, 6, and 7 are rational numbers.

Also, the square of any rational number is a rational number, $a \cdot a = a^2$, is a rational number.

The product of any two rational numbers is a rational number, so

$5 \cdot a^3 = a \cdot 5a^2$ and $6 \cdot a^2 = 6a^2$ is a rational number.

Finally, the symmetrideness of rational numbers is a rational number.

That is, $5a^3 + 6a^2 - 7$ is rational.

Chapter 4.3, Problem 27E

Problem

It is a fact that if *n* is any nonnegative integer, then

$$1+\frac{1}{2}+\frac{1}{2^2}+\frac{1}{2^3}+\cdots+\frac{1}{2^n}=\frac{1-(1/2^{n+1})}{1-(1/2)}.$$

(A more general form of this statement is proved in Section). Is the right-hand side of this equation rational? If so, express it as a ratio of two integers.

Step-by-step solution

Step 1 of 1

Yes

Suppose *n* is any non-negative integer

Let $y=\dfrac{1-\left(\dfrac{1}{2^{n+1}}\right)}{1-\left(\dfrac{1}{2}\right)}$

$$=\frac{1-\dfrac{1}{2^{n+1}}}{\dfrac{1}{2}}$$

Multiplying the nominator and denominator, and dividing by 2^{n+1}, we get

$$y=\frac{\left[1-\dfrac{1}{2^{n+1}}\right]2^{n+1}}{\left[\dfrac{1}{2}\right]2^{n+1}}$$

$$y=\frac{2^{n+1}-1}{2^n}$$

Let $p=2^{n+1}-1$ and $q=2^n$, then *p* and *q* are integers, because *n* is a non-negative integer and $2^n\neq 0$.

$\therefore y=\dfrac{p}{q}$, for some integers *p* and *q*, with $q\neq 0$

$\therefore y$ is a rational number

Chapter 4.3, Problem 28E

Problem

Suppose *a, b, c,* and *d* are integers and *a* ≠ c. Suppose also that x is a real number that satisfies the equation

$$\frac{ax+b}{cx+d}=1.$$

Must *x* be rational? If so, express *x* as a ratio of two integers.

Step-by-step solution

Step 1 of 2

Yes

Let $a,b,c,$ and d be integers, and $a \neq c$

Let x be a real number that satisfies the equation

$$\frac{ax+b}{cx+d}=1$$

By cross multiplication, we have

$$ax+b=cx+d$$

$$\Rightarrow ax-cx=d-b$$

$$\Rightarrow x(a-c)=d-b$$

$$\Rightarrow x=\frac{d-b}{a-c}\ ,\ a \neq c$$

Step 2 of 2

Let $p=d-b$ and $q=a-c$, then *p* and *q* are integers, because the difference of any two integers is also an integer, and $q=a-c \neq 0 \qquad (\because a \neq c)$

$\therefore x=\frac{p}{q}$, for some integer *p* and *q* with $q \neq 0$

Therefore, x is a ratio of two integers

Chapter 4.3, Problem 29E

Problem

Suppose *a, b,* and *c* are integers and x, y, and *z* are nonzero real numbers that satisfy the following equations:

$$\frac{xy}{x+y}=a \quad \text{and} \quad \frac{xz}{x+z}=b \quad \text{and} \quad \frac{yz}{y+z}=c.$$

Is *x* rational? If so, express it as a ratio of two integers.

Step-by-step solution

Step 1 of 4

The objective is to determine x is rational number or not if the following equations are satisfied:

$$\frac{xy}{x+y}=a, \quad \frac{xz}{x+z}=b, \quad \text{and} \quad \frac{yz}{y+z}=c.$$

Here $a, b,$ and c are integers and $x, y,$ and z are non-zero real numbers.

Rewrite the equations as follows:

$$\frac{x+y}{xy}=\frac{1}{a}\Rightarrow\frac{1}{x}+\frac{1}{y}=\frac{1}{a}$$
$$\frac{x+z}{xz}=\frac{1}{b}\Rightarrow\frac{1}{x}+\frac{1}{z}=\frac{1}{b}$$
$$\frac{yz}{y+z}=\frac{1}{c}\Rightarrow\frac{1}{y}+\frac{1}{z}=\frac{1}{c}$$

Comments (1)

?

Step 2 of 4

Subtract $\frac{1}{y}+\frac{1}{z}=\frac{1}{c}$ from $\frac{1}{x}+\frac{1}{z}=\frac{1}{b}$.

$$\frac{1}{x}-\frac{1}{y}=\frac{1}{b}-\frac{1}{c}$$

Add $\frac{1}{x}-\frac{1}{y}=\frac{1}{b}-\frac{1}{c}$ to $\frac{1}{x}+\frac{1}{y}=\frac{1}{a}$.

$$\frac{2}{x}=\frac{1}{a}+\frac{1}{b}-\frac{1}{c}$$
$$\frac{2}{x}=\frac{bc+ac-ab}{abc}$$
$$x=\frac{2abc}{bc+ac-ab}$$

Step 3 of 4

To show that x is rational, it is enough to show that $bc+ac-ab\neq 0$.

If possible suppose that $bc+ac-ab=0$.

$$c(a+b)=ab$$
$$\frac{a+b}{ab}=\frac{1}{c}$$
$$\frac{1}{a}+\frac{1}{b}=\frac{1}{c}$$

Add $\frac{1}{x}+\frac{1}{y}=\frac{1}{a}, \frac{1}{x}+\frac{1}{z}=\frac{1}{b}$, and $\frac{1}{y}+\frac{1}{z}=\frac{1}{c}$.

$$\frac{1}{x}+\frac{1}{y}+\frac{1}{x}+\frac{1}{z}+\frac{1}{y}+\frac{1}{z}=\frac{1}{a}+\frac{1}{b}+\frac{1}{c}$$
$$\frac{2}{x}+\frac{2}{y}+\frac{2}{z}=\frac{1}{c}+\frac{1}{c} \qquad \text{since } \frac{1}{a}+\frac{1}{b}=\frac{1}{c}$$
$$2\left(\frac{1}{x}+\frac{1}{y}+\frac{1}{z}\right)=\frac{2}{c}$$
$$\frac{1}{x}+\frac{1}{y}+\frac{1}{z}=\frac{1}{c}$$

Step 4 of 4

Substitute $\frac{1}{y}+\frac{1}{z}=\frac{1}{c}$ in $\frac{1}{x}+\frac{1}{y}+\frac{1}{z}=\frac{1}{c}$.

$$\frac{1}{x}+\frac{1}{c}=\frac{1}{c}$$
$$\frac{1}{x}=0$$
$$x=\infty$$

Thus, the supposition $bc+ac-ab=0$ is false as x is a real number.

Hence, x is rational.

Chapter 4.3, Problem 30E

Problem

Prove that if one solution for a quadratic equation of the form $x2 + bx + c = 0$ is rational (where b and c are rational), then the other solution is also rational. (Use the fact that if the solutions of the equation are r and s, then $x2 + bx + c = (x - r)(x - s)$.)

Step-by-step solution

Step 1 of 4

Consider the quadratic equation,

$$x^2 + bx + c = 0$$

The objective is to prove that if one solution is rational then the other solution is also rational.

Step 2 of 4

The objective is to prove that if one solution for a quadratic equation of the form $x^2 + bx + c = 0$ is rational, then the other solution is also rational.

Here, b and c are rational numbers.

Let $x = r$ be the rational solution of $x^2 + bx + c = 0.$

Then, the quadratic equation can be written as,

$x^2 + bx + c = (x - r)(x - s)$ for some unknown number s.

Step 3 of 4

Expand $(x - r)(x - s)$ as follows:

$$\begin{aligned}(x-r)(x-s) &= x^2 - rx - sx + rs \\ &= x^2 - (r+s)x + rs\end{aligned}$$

Step 4 of 4

Compare $x^2 - (r+s)x + rs$ with $x^2 + bx + c = 0.$

$b = -(r+s)$ and $c = rs$

$s = -r - b$

Here b is rational and r is also rational.

The sum of any two rational numbers is rational.

Thus, $s = -(r+b)$ is a rational number, as b and r are rational.

Therefore, the other solution of $x^2 + bx + c = 0$ is also rational.

Chapter 4.3, Problem 31E

Problem

Prove that if a real number *c* satisfies a polynomial equation of the form

*r*3 *x*3 + *r*2 *x*2 + *r*1 *x* + *r*0 = 0,

where *r0, r1,* *r*2, and *r*3 are rational numbers, then *c* satisfies an equation of the form

*n*3 *x*3 + *n*2 *x*2 + *n*1 *x* + *n*0 = 0,

where *n0,* *n*1, *n*2, and *n*3 are integers.

Definition: A number *c* is called a root of a polynomial *p*(*x*) if, and only if, *p*(*c*) = 0.

Step-by-step solution

Step 1 of 1

Proof:

Suppose c is a real number such that,

$$r_3c^3 + r_2c^2 + r_1c + r_0 = 0$$

Where r_0, r_1, r_2 and r_3 are rational numbers.

By definition of rational,

$$r_0 = \frac{a_0}{b_0}, r_1 = \frac{a_1}{b_1}, r_2 = \frac{a_2}{b_2}, r_3 = \frac{a_3}{b_3}$$

For some integers, a_0, a_1, a_2, a_3 and $b_0 \neq b_1 \neq b_2 \neq b_3 \neq 0$.

Now, substitute the above value in the original equation,

$$\begin{aligned}
&r_3c^3 + r_2c^2 + r_1c + r_0 \\
&= \frac{a_3}{b_3}c^3 + \frac{a_2}{b_2}c^2 + \frac{a_1}{b_1}c + \frac{a_0}{b_0} \\
&= \frac{b_0b_1b_2a_3}{b_0b_1b_2b_3}c^3 + \frac{b_0b_1b_3a_2}{b_0b_1b_2b_3}c^2 + \frac{b_0b_2b_3a_1}{b_0b_1b_2b_3}c^1 + \frac{b_1b_2b_3a_0}{b_0b_1b_2b_3} \\
&= 0
\end{aligned}$$

Multiplying both sides by $b_0b_1b_2b_3$ gives,

$$b_0b_1b_2a_3 \cdot c^3 + b_0b_1b_3a_2 \cdot c^2 + b_0b_2b_3a_1 \cdot c^1 + b_1b_2b_3a_0 = 0$$

Let $n_3 = b_0b_1b_2a_3, n_2 = b_0b_1b_3a_2, n_1 = b_0b_2b_3a_1, n_0 = b_1b_2b_3a_0$.

And n_0, n_1, n_2 and n_3 are all integers.

Hence c satisfies the equation

$$n_3c^3 + n_2c^2 + n_1c + n_0 = 0$$

Where n_0, n_1, n_2 and n_3 are all integers.

Hence the statement is proved.

Chapter 4.3, Problem 32E

Problem

Prove that for all real numbers *c*, if *c* is a root of a polynomial with rational coefficients, then *c* is a root of a polynomial with integer coefficients.

Step-by-step solution

Step 1 of 6

Consider a polynomial with rational coefficients such that *c* is a root for any real number *c*.

The objective is to prove that *c* is also a root of polynomial with integer coefficients.

Step 2 of 6

Suppose $p(x)=\sum_{i=0}^{n} a_i x^i = a_0 + a_1 x + a_2 x^2 + \cdots + a_{n-1}x^{n-1} + a_n x^n$ is a polynomial with rational coefficients.

Here, all $a_i, 0 \le i \le n$ are rational number.

Step 3 of 6

Since, *c* is the root of polynomial $p(x)$.

So,

$$p(c)=0=\sum_{i=0}^{n} a_i (c)^i = 0 \qquad \text{..... } (1)$$

Since, given that, $a_i, 0 \le i \le n$ are rational number.

So, there exists integers p_i, q_i, $1 \le i \le n$ such that,

$$a_i = \frac{p_i}{q_i}, q_i \ne 0, 1 \le i \le n \qquad \text{..... } (2)$$

Substitute the value of equation (2) in equation (1). This gives,

$$\sum_{i=0}^{n}\left(\frac{p_i}{q_i}\right)(c)^i = 0 \qquad \text{..... } (3)$$

Step 4 of 6

Multiply equation (3) by $\prod_{k=0}^{n} q_k$ and proceed as follows:

$$\sum_{i=0}^{n}\left(\frac{p_i}{q_i}\right)(c)^i \cdot \prod_{k=0}^{n} q_k = 0 \cdot \prod_{k=0}^{n} q_k$$

$$\sum_{i=0}^{n}\left(\frac{p_i}{q_i}\right)(c)^i \cdot \prod_{k=0}^{n} q_k = 0$$

Step 5 of 6

Simplify the above steps as follows:

$$\left(\sum_{i=0}^{n}\left(\frac{p_i}{q_i}\right)\prod_{k=0}^{n} q_k (c)^i\right) = 0$$

$$\left(\sum_{i=0}^{n}\left(p_i \prod_{\substack{k=0 \\ k\ne i}}^{n} q_k\right)\cdot (c)^i\right) = 0 \qquad \text{..... } (4)$$

Note that, p_i *and* q_i are integers. So, their product is also an integer.

Step 6 of 6

So, let $p_i \prod_{\substack{k=0 \\ k\ne i}}^{n} q_k = r_i$, is also an integer.

Use this value in equation (4). This gives,

$$\left(\sum_{i=0}^{n} r_i (c)^i\right) = 0$$

This implies $r_i, 1 \le i \le n$ is an integer and *c* is the root.

Hence, *c* is the root of the polynomial with integer coefficients.

Chapter 4.3, Problem 33E

Problem

Use the properties of even and odd integers that are listed in Example to do exercise.

Example

Deriving Additional Results about Even and Odd Integers

Suppose that you have already proved the following properties of even and odd integers:

1. The sum, product, and difference of any two even integers are even.

2. The sum and difference of any two odd integers are even.

3. The product of any two odd integers is odd.

4. The product of any even integer and any odd integer is even.

5. The sum of any odd integer and any even integer is odd.

6. The difference of any odd integer minus any even integer is odd.

7. The difference of any even integer minus any odd integer is odd.

Use the properties listed above to prove that if *a* is any even integer and *b* is any odd integer, then $\frac{a^2+b^2+1}{2}$ is an integer.

Solution

Suppose *a* is any even integer and *b* is any odd integer. By property 3, *b*2 is odd, and by property 1, *a*2 is even. Then by property 5, *a*2 + *b*2 is odd, and because 1 is also odd, the sum (*a*2 + *b*2)+ 1 = *a*2 + *b*2 + 1 is even by property 2. Hence, by definition of even, there exists an integer *k* such that *a*2 + *b*2 + 1 = 2*k*. Dividing both sides by 2 gives $\frac{a^2+b^2+1}{2} = k$, which is an integer. Thus $\frac{a^2+b^2+1}{2}$ is an integer *[as was to be shown]*.

Exercise

When expressions of the form (*x* −*r*)(*x* − *s*) are multiplied out, a quadratic polynomial is obtained. For instance, (*x* −2)(*x* −(−7))= (*x* −2)(*x* + 7) = *x*2 + 5*x* − 14.

a. What can be said about the coefficients of the polynomial obtained by multiplying out (*x* −*r*)(*x* − *s*) when both *r* and *s* are odd integers? when both *r* and *s* are even integers? when one of *r* and *s* is even and the other is odd?

b. It follows from part (a) that *x*2 − 1253*x* + 255 cannot be written as a product of two polynomials with integer coefficients. Explain why this is so.

Step-by-step solution

Step 1 of 5

Given

When expressions of the form $(x-r)(x-s)$ are multiplied out, a quadratic polynomial is obtained. For instance,

$$(x-2)(x-(-7))=(x-2)(x+7)=x^2+5x-14$$

(a) We note following before writing answer of this problem:

(i) Sum of two odd (even) integers is even (even).

(ii) Sum of one odd and one even integer is odd.

(iii) Product of two odd (even) integers is odd (even).

(iv) Product of one odd and one even integer is even.

Step 2 of 5

Now $(x-r)(x-s)=x^2-(r+s)x+rs$.

If both r,s are odd then the coefficient are given as follows:

(i) coefficient of x^2 is equal to 1.

(ii) Coefficient of x is $-(r+s)$, i.e. sum of two odd, and hence even.

(iii) Constant is $r\,s$ product of two odd, hence odd.

Step 3 of 5

If both r,s are even then the coefficient are given as follows:

(i) coefficient of x^2 is equal to 1.

(ii) Coefficient of x is $-(r+s)$, i.e. sum of two even, and hence even.

(iii) Constant is $r\,s$ product of two even, hence even.

Step 4 of 5

If one of r,s is odd and other is even, then the coefficients are given as follows:

(i) coefficient of x^2 is equal to 1.

(ii) Coefficient of x is $-(r+s)$, i.e. sum of one odd and one even, and hence odd.

(iii) Constant is $r\,s$ product of one odd and one even, hence even.

Step 5 of 5

(b) If we compare $x^2-(r+s)x+rs$ with $x^2-1253x+255$, then we have $rt=255$. Since it is an odd number, both r,t are odd. The possible value of r And t are $3,85$ or $5,51$ or $15,17$ or $1,255$. Since sum of any of those pair is Not 1253. Therefore, $x^2-1253x+255$ **can not be written as product of two Polynomial.**

Chapter 4.3, Problem 34E

Problem

Use the properties of even and odd integers that are listed in Example to do exercise.

Example

Deriving Additional Results about Even and Odd Integers

Suppose that you have already proved the following properties of even and odd integers:

1. The sum, product, and difference of any two even integers are even.

2. The sum and difference of any two odd integers are even.

3. The product of any two odd integers is odd.

4. The product of any even integer and any odd integer is even.

5. The sum of any odd integer and any even integer is odd.

6. The difference of any odd integer minus any even integer is odd.

7. The difference of any even integer minus any odd integer is odd.

Use the properties listed above to prove that if *a* is any even integer and *b* is any odd integer, then $\frac{a^2+b^2+1}{2}$ is an integer.

Solution

Suppose *a* is any even integer and *b* is any odd integer. By property 3, *b*2 is odd, and by property 1, *a*2 is even. Then by property 5, *a*2 + *b*2 is odd, and because 1 is also odd, the sum (*a*2 + *b*2)+ 1 = *a*2 + *b*2 + 1 is even by property 2. Hence, by definition of even, there exists an integer *k* such that *a*2 + *b*2 + 1 = 2*k*. Dividing both sides by 2 gives $\frac{a^2+b^2+1}{2} = k$; which is an integer. Thus $\frac{a^2+b^2+1}{2}$ is an integer *[as was to be shown]*.

Exercise

Observe that (*x* − *r*)(*x* − *s*)(*x* − *t*) = *x*3 − (*r* + *s* + *t*)*x*2 + (*rs* + *rt* + *st*)*x* −*rst*.

a. Derive a result for cubic polynomials similar to the result in part (a) of exercise 1 for quadratic polynomials.

b. Can *x*3 + 7*x*2 − 8*x* − 27 be written as a product of three polynomials with integer coefficients? Explain.

Exercise 1

When expressions of the form (*x* −*r*)(*x* − *s*) are multiplied out, a quadratic polynomial is obtained. For instance, (*x* −2)(*x* −(−7))= (*x* −2)(*x* + 7) = *x*2 + 5*x* − 14.

a. What can be said about the coefficients of the polynomial obtained by multiplying out (*x* −*r*)(*x* − *s*) when both *r* and *s* are odd integers? when both *r* and *s* are even integers? when one of *r* and *s* is even and the other is odd?

b. It follows from part (a) that *x*2 − 1253*x* + 255 cannot be written as a product of two polynomials with integer coefficients. Explain why this is so.

Step-by-step solution

Step 1 of 5

Given

$$(x-r)(x-s)(x-t)=x^3-(r+s+t)x^2+(rs+rt+st)x-rst$$

Step 2 of 5

(a)

Coefficients of the polynomial obtained by multiplying out $(x-r)(x-s)(x-t)$ as follows:

Case-1: All r,s,t are odd

Coefficients of x^2, x, 1 are odd.

Case-2: One of r,s,t is odd and others two are even.

Coefficients of x^2 is odd, coefficients of x, 1 are even.

Step 3 of 5

Case-3: One of r,s,t is even and others two are odd.

Coefficients of x^2, 1 are even, coefficients of x is odd.

Case-4: All r,s,t are even.

Coefficients of x^2, x, 1 are even.

These are all possible cases for the coefficients of the polynomial

Step 4 of 5

(b)

The given polynomial is $x^3+7x^2-8x-27$.

Suppose that we can write this polynomial as a product of three polynomials with integer coefficients.

Then, degree of each polynomial is one. Hence we can write

$$x^3+7x^2-8x-27=(x-r)(x-s)(x-t)$$

Step 5 of 5

Since, the coefficient of 1 is odd number -27

Therefore, all r,s,t are odd. ..... [From (a)]

Then, the coefficient of x must be odd by Case-1 of part (a). But the coefficient of x is even in the given equation. This is a contradiction.

Therefore, the given polynomial can't write as a product of three polynomials with integer coefficients.

Chapter 4.3, Problem 35E

Problem

Find the mistakes in the "proofs" that the sum of any two rational numbers is a rational number.

Exercise

"**Proof:** Any two rational numbers produce a rational number when added together. So if r and s are particular but arbitrarily chosen rational numbers, then $r + s$ is rational."

Step-by-step solution

Step 1 of 1

Consider the statement, the sum of any two- rational number is a rational number".

Now consider the proof of the above theorem written below:

Any two rational numbers produce a rational number when added together. So, if r and s are particular but arbitrary chosen rational numbers, then $r+s$ is a rational".

The objective is to find the mistakes in the above proof.

Since, in the first line that, any two rational numbers produce a rational number when added together result is already assumed.

Therefore, there is a mistake in the first line of the proof.

Chapter 4.3, Problem 36E

Problem

Find the mistakes in the "proofs" that the sum of any two rational numbers is a rational number.

Exercise

"Proof: Let rational numbers $r = \frac{1}{4}$ and $s = \frac{1}{2}$ be given. Then $r + s = \frac{1}{4} + \frac{1}{2} = \frac{3}{4}$., which is a rational number. This is what was to be shown."

Step-by-step solution

Step 1 of 1

The objective is to find the mistakes in the proof of the theorem which states that the sum of any two rational numbers is a rational number.

The proof of a theorem or result should be universal; it cannot be a generalized statement with a single case.

Take r and s as arbitrary rational numbers, to prove the statement.

Therefore, all rational numbers must be considered to show that that the statement is true.

Chapter 4.3, Problem 37E

Problem

Find the mistakes in the "proofs" that the sum of any two rational numbers is a rational number.

Exercise

"Proof: Suppose *r* and *s* are rational numbers. By definition of rational, $r = a/b$ for some integers *a* and *b* with $b \neq 0$, and $s = a/b$ for some integers *a* and *b* with $b \neq 0$. Then

$r + s = \frac{a}{b} + \frac{a}{b} = \frac{2a}{b}$. Let $p = 2a$. Then *p* is an integer since it is a product of integers. Hence $r + s = p/b$, where *p* and *b* are integers and $b \neq 0$. Thus $r + s$ is a rational number by definition of rational. This is what was to be shown."

Step-by-step solution

Step 1 of 1

In the proof, the rational numbers *r* and *s* are both are the same,

i.e., both *r* and *s* are equal to $\frac{a}{b}$.

This incorrect proof violates the requirement that *r* and *s* are both arbitrarily chosen rational numbers.

If both *r* and *s* are equal $\frac{a}{b}$, then $r = s$

Chapter 4.3, Problem 38E

Problem

Find the mistakes in the "proofs" that the sum of any two rational numbers is a rational number.

Exercise

"Proof: Suppose r and s are rational numbers. Then $r = a/b$ and $s = c/d$ for some integers a, b, c, and d with $b \neq 0$ and $d \neq 0$ (by definition of rational). Then

$$r + s = \frac{a}{b} + \frac{c}{d}.$$

But this is a sum of two fractions, which is a fraction. So $r + s$ is a rational number since a rational number is a fraction."

Step-by-step solution

Step 1 of 2

The objective is the find the mistake in the proof that the sum of any two rational numbers is a rational number.

The proof is correct till the step

$$r + s = \frac{a}{b} + \frac{c}{d}$$

Step 2 of 2

After this step in the proof, the words rational number and fraction have been used interchangeably, and then **circular reasoning** is used by assuming what is to be proved.

The crucial calculation

$$\begin{aligned} r + s &= \frac{a}{b} + \frac{c}{d} \\ &= \frac{ad + bc}{bd} \end{aligned}$$

is missing.

Also, the steps to check if the numerator and the denominator are integers with non-zero denominator are missing.

Chapter 4.3, Problem 39E

Problem

Find the mistakes in the "proofs" that the sum of any two rational numbers is a rational number.

Exercise

"Proof: Suppose *r* and *s* are rational numbers. If *r* + *s* is rational, then by definition of rational *r* + *s* = *a/b* for some integers *a* and *b* with *b* ≠ 0. Also since *r* and *s* are rational, *r* = *i/j* and *s* = *m/n* for some integers *i, j, m,* and *n* with *j* ≠ 0 and *n* ≠ 0. It follows that

$r+s=\frac{i}{j}+\frac{m}{n}=\frac{a}{b}$, which is a quotient of two integers with a nonzero denominator. Hence it is a rational number. This is what was to be shown."

Step-by-step solution

Step 1 of 2

The objective is the find the mistake in the proof that the sum of any two rational numbers is a rational number.

Here, the conclusion to be shown is restated using a variable.

First, variables have been introduced by writing "if $r+s$ is rational, then by definition of rational $r+s=\frac{a}{b}$ for some integers *a* and *b* with $b\neq 0$".

Step 2 of 2

In the later step, it is assumed that such variables exist because of which

$$r+s=\frac{i}{j}+\frac{m}{n}=\frac{a}{b}$$

which has not been proved.

Here, there is confusion between what is known and what is still to be shown. The existence of variables *a* and *b* has been assumed when it has not been established.

Instead, the proof should have statement such as "show that there exists integers *a* and *b* such that $r+s=\frac{a}{b}$.

Comments (1)

The answer on slader is a bit easier to understand. Its reasoning directly references one of the common mistakes in writing proofs that Epp lists in her book.

Chapter 4.4, Problem 1E

Problem

Give a reason for your answer. Assume that all variables represent integers.

Exercise

Is 52 divisible by 13?

Step-by-step solution

Step 1 of 1

Yes

From the definition of divisibility, if *n* and *d* are integers, then

n is divisible by *d* if and only if $n = dk$, for some integer *k*.

$\therefore 52 = 13 \cdot 4$

i.e., 52 is a multiple of 13

Therefore, 52 is divisible by 13

Chapter 4.4, Problem 2E

Problem

Give a reason for your answer. Assume that all variables represent integers.

Exercise

Does 7 | 56?

Step-by-step solution

Step 1 of 1

The objective is to determine whether $7 \mid 56$ or not.

Use the result, $d \mid n \Leftrightarrow \exists$ an integer k, such that $n = dk$.

As $\frac{56}{7} = 8$ follows that there exists an integer $k = 8$ such that $56 = 7 \cdot 8$.

Therefore, 7 divides 56.

Chapter 4.4, Problem 3E

Problem

Give a reason for your answer. Assume that all variables represent integers.

Exercise

Does 5 | 0?

Step-by-step solution

Step 1 of 1

Yes

From the definition of divisibility, if *n* and *d* are integers, then

n is divisible by *d*, but only if $n = dk$, for some integer *k*.

$\therefore \quad 0 = 5 \cdot 0$

i.e., 0 is a multiple of 5

Therefore, 0 is divisible by 5

Chapter 4.4, Problem 4E

Problem

Give a reason for your answer. Assume that all variables represent integers.

Exercise

Does 3 divide (3*k* + 1)(3k + 2)(3*k* + 3)?

Step-by-step solution

Step 1 of 3

Consider the expression as,

$$(3k+1)(3k+2)(3k+3)$$

Here, k is an integer.

The objective is to identify whether 3 divides $(3k+1)(3k+2)(3k+3)$ or not.

Step 2 of 3

Definition of divisibility:

If n and d are two integers then n is divisible by d if and only if $n = dm$ for some integer m. This implies $d|n$.

Consider, $n = (3k+1)(3k+2)(3k+3)$ and $d = 3$.

Rewrite the given expression as follows:

$$(3k+1)(3k+2)(3k+3) = (3k+1)(3k+2)\cdot 3\cdot(k+1)\begin{pmatrix}\text{Using Distributive}\\ \text{lawof Algebra}\end{pmatrix}$$

$$(3k+1)(3k+2)(3k+3) = 3(3k+1)(3k+2)(k+1)$$

Thus, there exists an integer m (That is $m = (3k+1)(3k+2)(k+1)$) such that $n = dm$.

Step 3 of 3

Here, $m = (3k+1)(3k+2)(k+1)$ is an integer because it is a sum and product of integers.

Hence, $n = (3k+1)(3k+2)(3k+3)$ is divisible by $d = 3$ (By the definition of divisibility.)

That is, $3|(3k+1)(3k+2)(3k+3)$.

Hence, $\boxed{(3k+1)(3k+2)(3k+3)\text{ is divisible by }3}$ for some integer k.

Chapter 4.4, Problem 5E

Problem

Give a reason for your answer. Assume that all variables represent integers.

Exercise

Is $6m(2m + 10)$ divisible by 4?

Step-by-step solution

Step 1 of 3

Consider the expression $6m(2m+10)$, where m is an integer.

The objective is to find that provided expression is divided by 4 or not.

Step 2 of 3

Simplify provided expression as follows,

$$\begin{aligned} 6m(2m+10) &= 6m[2(m+5)] \\ &= 12m(m+5) \\ &= 12(m^2+5m) \end{aligned}$$

Step 3 of 3

As m is an integer. So, m^2+5m be also an integer.

As m^2+5m is multiple of 12 and 12 is divided by 4. Therefore, $12(m^2+5m)$ that is, $6m(2m+10)$ is divided by 4.

Hence, $6m(2m+10)$ is divided by 4.

Chapter 4.4, Problem 6E

Problem

Give a reason for your answer. Assume that all variables represent integers.

Exercise

Is 29 a multiple of 3?

Step-by-step solution

Step 1 of 1

No

From the definition of divisibility, if *n* and *d* are integers, then

n is divisible by *d* if and only if $n = dk$, for some integer *k*.

We say that *n* is a multiple of *d*

$\therefore 29 = 3(9.666.....)$

Then $9.666....$ is not an integer

Therefore, 29 is not a multiple of 3

Chapter 4.4, Problem 7E

Problem

Give a reason for your answer. Assume that all variables represent integers.

Exercise

Is −3 a factor of 66?

Step-by-step solution

Step 1 of 1

Yes

By the definition of divisibility, if *n* and *d* are integers, then

n is divisible by *d* if and only if $n = dk$, for some integer *k*.

We say that *d* is a factor of *n*

$\therefore 66 = (-3)(-22)$

Therefore, -3 is a factor of 66.

Chapter 4.4, Problem 8E

Problem

Give a reason for your answer. Assume that all variables represent integers.

Exercise

Is $6a(a + b)$ a multiple of $3a$?

Step-by-step solution

Step 1 of 1

Yes

From the definition of divisibility, if n and d are integers, then

n is divisible by d if and only if $n = dk$, for some integer k.

We say that n is a multiple of d

$\therefore 6a(a+b) = 3a[2(a+b)]$

Also, $2(a+b)$ is an integer because a and b are integers, and the sum and products of an integers are also integers.

Therefore, $6a(a+b)$ is a multiple of $3a$

Chapter 4.4, Problem 9E

Problem

Give a reason for your answer. Assume that all variables represent integers.

Exercise

Is 4 a factor of $2a \cdot 34b$?

Step-by-step solution

Step 1 of 1

Yes

From the definition of divisibility, if *n* and *d* are integers, then

n is divisible by *d* if and only if $n = dk$, for some integer *k*.

We say that *d* is a factor of *n*

$\therefore 2a \cdot 34b = (4)(17ab)$

Also, $17ab$ is an integer, because *a* and *b* are integers, and the products of integers are also integers.

Therefore, 4 is a factor of $2a \cdot 34b$

Chapter 4.4, Problem 10E

Problem

Give a reason for your answer. Assume that all variables represent integers.

Exercise

Does 7 | 34?

Step-by-step solution

Step 1 of 1

No

By the definition of divisibility, if *n* and *d* are integers, then

n is divisible by *d* only if $n = dk$, for some integer *k*.

$\therefore 34 = 7(4.86)$

$\frac{34}{7} \cong 4.86$, which is not an integer

Therefore, 34 is not divisible by 7

Chapter 4.4, Problem 11E

Problem

Give a reason for your answer. Assume that all variables represent integers.

Exercise

Does 13 | 73?

Step-by-step solution

Step 1 of 1

No

By the definition of divisibility, if *n* and *d* are integers, then

n is divisible by *d* only if $n = dk$, for some integer *k*.

$\therefore 73 = (13)(5.62)$

$\frac{73}{13} \cong 5.62$, which is not an integer

Therefore, 73 is not divisible by 13

Chapter 4.4, Problem 12E

Problem

Give a reason for your answer. Assume that all variables represent integers.

Exercise

If $n = 4k + 1$, does 8 divide $n2 - 1$?

Step-by-step solution

Step 1 of 1

Yes

Let $n = 4k + 1$

We must show that $n^2 - 1$ is divisible by 8

Now, $n^2 - 1 = (4k+1)^2 - 1$ [by substitution]

$= 16k^2 + 8k + 1 - 1$ [by algebra]

$= 16k^2 + 8k$

$= 8(2k^2 + 1)$

From the definition of divisibility,

$16k^2 + 8k = 8(2k^2 + k)$

And $2k^2 + k$ is an integer, because k is an integer, and sums and products of integers are integers.

Comments (1)

should be (2k^2 + k) for the line above "from the definition of divisibility"

Chapter 4.4, Problem 13E

Problem

Give a reason for your answer. Assume that all variables represent integers.

Exercise

If $n = 4k + 3$, does 8 divide $n2 - 1$?

Step-by-step solution

Step 1 of 1

Yes

Let $n = 4k + 3$

We must show that $n^2 - 1$ is divisible by 8

Now, $n^2 - 1 = (4k+3)^2 - 1$ [by substitution]

$= 16k^2 + 24k + 9 - 1$ [by algebra]

$= 16k^2 + 24k + 8$

$= 8(2k^2 + 3k + 1)$

From the definition of divisibility,

$16k^2 + 24k + 8 = 8(2k^2 + 3k + 1)$

And $2k^2 + 3k + 1$ is an integer because k is an integer, and the sums and products of integers are also integers.

Chapter 4.4, Problem 14E

Problem

Fill in the blanks in the following proof that for all integers *a* and *b*, if *a* | *b* then *a* | (−*b*).

Proof:

Suppose *a* and *b* are any integers such that (a). By definition of divisibility, there exists an integer *r* such that (b) By substitution.

$-b = -ar = a(-r)$.

Let t = (c) Then t is an integer because $t = (-1) \cdot r$, and both −1 and r are integers. Thus, by substitution, $-b = at$, where t is an integer, and so by definition of divisibility, (d), as was to be shown.

Step-by-step solution

Step 1 of 2

Given

Fill in the blanks in the following proof that for all integers a *and* b, if $a \mid b$ then $a \mid (-b)$

We have to fill up the blank in the given proof.

Proof: Suppose a *and* b are any integers such that $a \mid b$. By definition of divisibility, there exists an integer r such that $b = a.r$. By substitution

$$\begin{aligned} -b &= -ar \\ &= a(-r) \end{aligned}$$

Step 2 of 2

Let $t = -r$. Then t is an integer because $t = (-1).r$, and both -1 *and* r are integers. Thus, by substitution, $-b = at$, where r is an integer, and so by definition of divisibility, $\underline{a \mid (-b)}$, as was to be shown.

Chapter 4.4, Problem 15E

Problem

Prove statement directly from the definition of divisibility.

Exercise

For all integers *a*, *b*, and *c*, if *a* | *b* and *a* | *c* then *a* | (*b* + *c*).

Step-by-step solution

Step 1 of 1

The objective is to prove that $a \mid (b+c)$ if $a \mid b$ and $a \mid c$.

From the definition of divisibility,

$a \mid b \Rightarrow b = ak$, for some integer *k*

$a \mid c \Rightarrow c = as$, for some integer s

Substitute the values of b and c in $b+c$.

$$\begin{aligned} b+c &= (ak+as) \\ &= a(k+s) \end{aligned}$$

As k and s are integers, follows that $p = k+s$ is also an integer.

Thus, $b+c = ap$ for some integer p.

Therefore, by the definition of divisibility, a is divisible by $b+c$.

That is, $a \mid (b+c)$.

Chapter 4.4, Problem 16E

Problem

Prove statement directly from the definition of divisibility.

Exercise

For all integers *a, b,* and c, if *a* | *b* and *a* | *c* then *a* | (*b* − *c*).

Step-by-step solution

Step 1 of 1

The objective is to prove that $a \mid (b-c)$ if $a \mid b$ and $a \mid c$.

From the definition of divisibility,

$a \mid b \Rightarrow b = ak$, for some integer *k*

$a \mid c \Rightarrow c = as$, for some integer s

Substitute the values of b and c in $b-c$.

$$\begin{aligned} b-c &= (ak-as) \\ &= a(k-s) \end{aligned}$$

As k and s are integers, follows that $p = k-s$ is also an integer.

Thus, $b-c = ap$ for some integer p.

Therefore, by the definition of divisibility, a is divisible by $b-c$.

That is, $a \mid (b-c)$.

Chapter 4.4, Problem 17E

Problem

For all integers *a*, *b*, *c*, and *d*, if *a*|*c* and *b*|*d* then *ab*|*cd*.

Step-by-step solution

Step 1 of 2

Consider the given statement.

For all integers *a*, *b*, *c* and *d*, if $a \mid c$ and $b \mid d$, then $ab \mid cd$.

The main objective of the problem is to give a proof for the given statement.

Step 2 of 2

Proof: Suppose *a*, *b*, *c* and *d* such that $a \mid c$ and $b \mid d$.

[We must show that $ab \mid cd$.]

By the definition of divisibility $c = am$ and $d = bn$ for some integers *m* and *n*.

Then

$$\begin{aligned} cd &= (am)(bn) && \text{by substitution} \\ &= ambn \\ &= abmn && \text{by commutative law of algebra} \\ &= (ab)(mn) && \text{by algebra} \end{aligned}$$

Let $t = mn$. Then by substitution, $cd = ab \cdot t$ and *t* is an integer because $\mathbb{Z}$ is closed under multiplication.

Hence $cd = ab \cdot t$, and so definition of divisibility $ab \mid cd$.

Chapter 4.4, Problem 18E

Problem

Consider the following statement: The negative of any multiple of 3 is a multiple of 3.

a. Write the statement formally using a quantifier and a variable.

---

b. Determine whether the statement is true or false and justify your answer.

Step-by-step solution

Step 1 of 2

(a)

The statement "the negative of any multiple of 3 is a multiple of 3" is written formally using a quantifier and a variable as:

" $\forall$ integers n, if n is a multiple of 3 then $-n$ is a multiple of 3"

Step 2 of 2

(b)

The statement "the negative of any multiple of 3 is a multiple of 3" is true.

Proof:

Suppose n is any integer that is a multiple of 3.

Then we must show $-n$ is multiple of 3.

Now, by the definition of multiple,

$n = 3k$ for some integer k.

Then

$-n = -(3k)$ by substitution

$= 3(-k)$ by algebra

Hence, by the definition of multiple, $-n$ is a multiple of 3.

Chapter 4.4, Problem 19E

Problem

Show that the following statement is false: For all integers *a* and b, if 3 | (*a* + *b*) then 3 | (*a* − *b*).

Step-by-step solution

Step 1 of 1

The objective is to show that the following statement is false:

"For all integers a and b, if $3 \mid a+b$ then $3 \mid a-b$."

To show that the statement is false, it is enough to give a counter example.

For $a=7$ and $b=2$,

$$\begin{aligned} a+b &= 7+2 \\ &= 9 \end{aligned}$$

Clearly, 3 divides 9, but $a-b=5$ is not divisible by 3.

Thus, if $3 \mid a+b$ then $3 \mid a-b$ may not be true.

Therefore, the statement is **false**.

Chapter 4.4, Problem 20E

Problem

For the statement, determine whether the statement is true or false. Prove the statement directly from the definitions if it is true, and give a counterexample if it is false.

Exercise

The sum of any three consecutive integers is divisible by 3. (Two integers are **consecutive** if, and only if, one is one more than the other.)

Step-by-step solution

Step 1 of 3

The objective is to determine whether the given statement is true or not.

Step 2 of 3

Suppose $k, k+1$ and $k+2$ are any three consecutive integers.

The sum of the above three consecutive integers is given by,

$$k+(k+1)+(k+2)=3k+3$$

Step 3 of 3

By the definition of divisibility,

$$3k+3=3(k+1)$$

And $k+1$ is an integer because 1, *k* are integers then the sum of integers is an integer.

Also $3(k+1)$ implies $k+1$ is a multiple of 3.

Therefore, $3k+3$ is divisible by 3.

Hence, the given statement is true.

Chapter 4.4, Problem 21E

Problem

For the statement, determine whether the statement is true or false. Prove the statement directly from the definitions if it is true, and give a counterexample if it is false.

Exercise

The product of any two even integers is a multiple of 4.

Step-by-step solution

Step 1 of 1

True

Suppose that $2l$ and $2m$ are any two even integers

Then the product of the even integers is $2l \cdot 2m = 4lm$

$\therefore$ By the definition of divisibility,

$(2l)(2m)$ is a multiple of 4.

Therefore, the product of any two even integers is a multiple of 4

Chapter 4.4, Problem 22E

Problem

For the statement, determine whether the statement is true or false. Prove the statement directly from the definitions if it is true, and give a counterexample if it is false.

Exercise

A necessary condition for an integer to be divisible by 6 is that it be divisible by 2.

Step-by-step solution

Step 1 of 3

Consider the statement, "A necessary condition for an integer to be divisible by 6 is that it be divisible by 2".

The objective is to prove this statement is true or false.

Step 2 of 3

Let *n* be an integer divisible by 6.

By definition, for some integer k,

$$\frac{n}{6} = k$$
$$n = 6k$$

Thus,

$$\begin{aligned} n &= 2 \cdot 3 \cdot k \\ &= 2 \cdot (3k) \end{aligned}$$

Step 3 of 3

As $3k$ is an integer since it is the product of integers. Therefore,

$$n = 2 \cdot (\text{Integer})$$

Thus, by definition of divides $2 \mid n$.

Hence, proved that provided statement is true.

Chapter 4.4, Problem 23E

Problem

For the statement, determine whether the statement is true or false. Prove the statement directly from the definitions if it is true, and give a counterexample if it is false.

Exercise

A sufficient condition for an integer to be divisible by 8 is that it be divisible by 16.

Step-by-step solution

Step 1 of 1

This statement is true

Suppose *n* is any integer that is divisible by 16

From the definition of divisibility,

$n = 16p$, for some integer *p*

However, $16p = 8(2p)$

Let $k = 2p$

Then, *k* is an integer because *p* is an integer

Thus, $n = 8k$, for some integer *k*,

Since from the definition of divisibility, n is divisible by 8

Therefore, an integer that is divisible by 16 is also divisible by 8

The given statement can be rewritten formally as

For all integers *n*, if *n* is divisible by 16, then *n* is divisible by 8

Chapter 4.4, Problem 24E

Problem

For the statement, determine whether the statement is true or false. Prove the statement directly from the definitions if it is true, and give a counterexample if it is false.

Exercise

For all integers *a, b,* and c, if *a* | *b* and *a* | *c* then *a* | (2*b* − 3c).

Step-by-step solution

Step 1 of 1

The statement is true

Suppose *a*, *b*, and *c* are any integers, such that a/b and a/c

We must show that $a/(2b-3c)$

From the definition of divisibility,

$a/b \Rightarrow b = al$, for some integer l

$a/c \Rightarrow c = am$, for some integer m

Now, $2b-3c = 2(al)-3(am)$ [by substitution]

$= a[2l-3m]$

Let $t = 2l-3m$

Then, *t* is an integer because it is the difference of the products of integers

From the definition of divisibility, $a/2b-3c$

Chapter 4.4, Problem 25E

Problem

For the statement, determine whether the statement is true or false. Prove the statement directly from the definitions if it is true, and give a counterexample if it is false.

Exercise

For all integers *a*, *b*, and *c*, if *a* is a factor of *c* then *ab* is a factor of *c*.

Step-by-step solution

Step 1 of 1

The statement is false

Counterexample

Let $a=3$, $b=4$, and $c=15$

Then *a* is a factor of *c*

i.e., $3|15$

But $ab\nmid c$

$ab=3\cdot 4=12$, and 15 is not divisible by 12

Therefore, *ab* is a not factor of *c*

Chapter 4.4, Problem 26E

Problem

For the statement, determine whether the statement is true or false. Prove the statement directly from the definitions if it is true, and give a counterexample if it is false.

Exercise

For all integers *a*, *b*, and *c*, if *ab* | *c* then *a* | *c* and *b* | c.

Step-by-step solution

Step 1 of 2

The statement is: "for all integers a,b,c if $ab \mid c$ then $a \mid c$ and $b \mid c$."

Assume that $ab \mid c$ then by the definition of divisible there exists an integer p such that $c = (ab)p$.

Rewrite c as:

$c = a(bx)$ using associative property

$c = (ab)x = (ba)x = b(ax)$ using commutative and associative property

As b and x are integers, so bx is also integer.

Similarly, a and x are integers implies that ax is also integer.

Step 2 of 2

This can be written as:

$c = ak$ and $c = bl$ Taking $bx = k$ and $ax = l$.

Thus, c is divisible by a and divisible by b.

Hence, if $ab \mid c$ then $a \mid c$ and $b \mid c$.

Chapter 4.4, Problem 27E

Problem

For the statement, determine whether the statement is true or false. Prove the statement directly from the definitions if it is true, and give a counterexample if it is false.

Exercise

For all integers *a*, *b*, and *c*, if *a* | (*b* + *c*) then *a* | *b* or *a* | *c*.

Step-by-step solution

Step 1 of 2

Consider the statement "for all integers *a*, *b*, and *c*, if $a \mid (b+c)$ then *a* | *b* and *a* | *c*"

Step 2 of 2

The statement is false.

Write the Counter example:

Let $a=5,\ b=6$, and $c=4$

Then $a \mid (b+c)$

That is, $5 \mid (6+4)$

$5 \mid 10$

But,

$5 \nmid 6$ and $5 \nmid 4$

So,

$a \nmid b$ and $a \nmid c$

Hence, the above statement is $\boxed{\text{false}}$.

Chapter 4.4, Problem 28E

Problem

For the statement, determine whether the statement is true or false. Prove the statement directly from the definitions if it is true, and give a counterexample if it is false.

Exercise

For all integers *a*, *b*, and *c*, if *a* | *bc* then *a* | *b* or *a* | *c*.

Step-by-step solution

Step 1 of 1

This statement is false.

Counter example

Let $a = 4$, $b = 2$ and $c = 6$

Then, $a \mid bc$

i.e., $4 \mid 12$

However, $4 \nmid 2$ and $4 \nmid 6$

Chapter 4.4, Problem 29E

Problem

For the statement, determine whether the statement is true or false. Prove the statement directly from the definitions if it is true, and give a counterexample if it is false.

Exercise

For all integers *a* and *b*, if *a* | *b* then *a*2 | *b*2.

Step-by-step solution

Step 1 of 1

The statement is true

Let *a* and *b* be integers

Suppose $a \mid b$

From the definition of divisibility,

$b = ak$, for some integer *k*.

Squaring both sides, we get

$b^2 = a^2k^2$

Let $t = k^2$

Then, *t* is an integer, because *k* is an integer

$\therefore b^2 = a^2t$, for some integer *t*

By the definition of divisibility,

$\therefore a^2 \mid b^2$

Therefore, for all integers *a* and *b*, if $a \mid b$, then $a^2 \mid b^2$

Chapter 4.4, Problem 30E

Problem

For the statement, determine whether the statement is true or false. Prove the statement directly from the definitions if it is true, and give a counterexample if it is false.

Exercise

For all integers *a* and *n*, if *a* | *n*2 and *a* < *n* then *a* |*n*.

Step-by-step solution

Step 1 of 1

The objective is to determine whether the following statement is true or false:

"For all integers a and n, if $a \mid n^2$ and $a \le n$ then $a \mid n$."

Take $a = 4$ and $n = 6$, then $4 \mid 6^2$ is true as $6^2 = 36 = 9 \cdot 4$ and $4 \le 6$.

Clearly 4 do not divide 6.

Therefore, the statement is **false.**

Chapter 4.4, Problem 31E

Problem

For the statement, determine whether the statement is true or false. Prove the statement directly from the definitions if it is true, and give a counterexample if it is false.

Exercise

For all integers *a* and *b*, if *a* | 10*b* then *a* | 10 or *a* | *b*.

Step-by-step solution

Step 1 of 2

Consider the statement "For all integers *a* and *b*, if $a|10b$ then $a|10$ or $a|b$."

The objective is to determine whether the above statement is true or false.

The given statement is false.

The counterexample is as follows:

Let $a=20$ and $b=2$.

Substitute $a=20$ and $b=2$ in $a|10b$.

$$\begin{aligned} a|10b &= 20|10(2) \\ &= 20|20 \end{aligned}$$

Here, 20 divides 20 since $\frac{20}{20}$ is an integer.

Step 2 of 2

Substitute $a=20$ and $b=2$ in $a|10$.

$$a|10 = 20|10$$

Here, 20 doesn't divides 10 since $\frac{10}{20}$ is not an integer.

Substitute $a=20$ and $b=2$ in $a|b$.

$$a|b = 20|2.$$

Here, 20 doesn't divides 2 since $\frac{2}{20}$ is not an integer.

Therefore, the given statement is $\boxed{\text{false}}$.

Chapter 4.4, Problem 32E

Problem

A fast-food chain has a contest in which a card with numbers on it is given to each customer who makes a purchase. If some of the numbers on the card add up to 100, then the customer wins $100. A certain customer receives a card containing the numbers

72, 21, 15, 36, 69, 81, 9, 27, 42, and 63.

Will the customer win $100? Why or why not?

Step-by-step solution

Step 1 of 4

The objective is to determine whether the customer wins $100 or not in a contest arranged by a fast-food chain.

Step 2 of 4

A certain customer receives a card containing the numbers,

72, 21, 15, 36, 69, 81, 9, 27, 42, and 63

Each of 72, 21, 15, 36, 69, 81, 9, 27, 42, and 63 are multiple of 3 as,

$$72 = 3 \times 24$$
$$21 = 3 \times 7$$
$$15 = 3 \times 5$$
$$36 = 3 \times 12$$

Step 3 of 4

And,

$$69 = 3 \times 23$$
$$81 = 3 \times 27$$
$$9 = 3 \times 3$$
$$27 = 3 \times 9$$
$$42 = 3 \times 14$$
$$63 = 3 \times 21$$

Step 4 of 4

Recall the following result:

Suppose 3 divides any arbitrary numbers *a* and *b*. Then 3 also divides $a+b$.

Since each of 72, 21, 15, 36, 69, 81, 9, 27, 42, and 63 are divisible by 3, their sum is also divisible by 3 by the above-mentioned result.

But 100 is not a multiple of 3 or divisible by 3.

Thus, sum cannot be equal to 100.

Hence, the customer does not win $100.

Chapter 4.4, Problem 33E

Problem

Is it possible to have a combination of nickels, dimes, and quarters that add up to $4.72? Explain.

Step-by-step solution

Step 1 of 2

Suppose that number of nickels, dimes and quarters are x, y, z respectively.

Values of coins as follows:

1 nickel $= \$0.05$

1dime $= \$0.10$

1 quarter $= \$0.25$

Total $= \$\left(0.05x + 0.10y + 0.25z\right)$

$= 5x + 10y + 25z$ Cents

Step 2 of 2

Since 5, 10, and 25 are divisible by 5. Therefore, $5x + 10y + 25z$ is divisible by 5.

But the total amount $\$4.72 = 472$ Cents can't divisible by 5.

Hence it is **not possible** to have a combination of nickels, dimes and quarters that add up to $\$4.72$.

Chapter 4.4, Problem 34E

Problem

Consider a string consisting of *a*'s, *b*'s, and *c*'s where the number of *b*'s is three times the number of *a*'s and the number of *c*'s is five times the number of *a*'s. Prove that the length of the string is divisible by 3.

Step-by-step solution

Step 1 of 3

Consider the given statement.

There are strings namely *a*'s, *b*'s, and *c*'s. The number of b's string is three times the number of a's string. The number of c's string is five times the number of a's string.

The main objective of this problem is to prove that the length of the string is divisible by 3.

Step 2 of 3

Fact Used:

A number *n* is divisible by another number *k* if $n = kr$ for some integer *r*.

Step 3 of 3

Proof: Suppose *s* is a string of length *n* and let *s* consists strings namely *a*'s, *b*'s, and *c*'s.

Let m is the number of *a*'s. From the hypothesis, the number of *b*'s is $3m$ and the number of *c*'s is 5*m*. Since, *n* is the length of *s*, it will be the sum of number of *a*'s, *b*'s, and *c*'s.

$$\begin{aligned} n &= m + 3m + 5m \\ &= 9m \\ &= 3(3m) \end{aligned}$$

Hence by the definition of divisibility, n is divisible by 3.

Chapter 4.4, Problem 35E

Problem

Two athletes run a circular track at a steady pace so that the first completes one round in 8 minutes and the second in 10 minutes. If they both start from the same spot at 4 P.M., when will be the first time they return to the start together?

Step-by-step solution

Step 1 of 2

One athlete runs one round in 8 minutes and the other takes 10 minutes.

Both athletes started at 4 p.m.

Then, they will be again meet at the start point at the at least common multiple of 8 and 10 minutes.

Step 2 of 2

So, to find the Least Common Multiple of 8 and 10 that is,

$$\begin{array}{r|ll} 2 & 8, & 10 \\ \hline & 4 & 5 \end{array}$$

$$\begin{aligned} \text{LCM} &= 2 \cdot 4 \cdot 5 \\ &= 40 \end{aligned}$$

Therefore, 40 minutes from the start point, because the least common time is 40.

So both of athletes return to the start together at 4:40 p.m.

Therefore, the answer is $\boxed{4{:}40\ \text{PM}}$.

Chapter 4.4, Problem 36E

Problem

It can be shown (see exercises 1-4) that an integer is divisible by 3 if, and only if, the sum of its digits is divisible by 3. An integer is divisible by 9 if, and only if, the sum of its digits is divisible by 9. An integer is divisible by 5 if, and only if, its right-most digit is a 5 or a 0. And an integer is divisible by 4 if, and only if, the number formed by its right-most two digits is divisible by 4. Check the following integers for divisibility by 3, 4, 5 and 9.

a. 637,425,403,705,125

---

b. 12,858,306,120,312

---

c. 517,924,440,926,512

---

d. 14,328,083,360,232

Exercise 1

Prove that if n is any nonnegative integer whose decimal representation ends in 0, then $5 \mid n$. *(Hint:* If the decimal representation of a nonnegative integer n ends in $d0$, then $n = 10m + d0$ for some integer m.)

Exercise 2

Prove that if n is any nonnegative integer whose decimal representation ends in 5, then $5 \mid n$.

Exercise 3

Prove that if the decimal representation of a nonnegative integer n ends in $d1d0$ and if $4 \mid (10d1 + d0)$, then $4 \mid n$. (*Hint:* If the decimal representation of a nonnegative integer n ends in $d1\ d0$, then there is an integer s such that $n = 100s + 10d1 + d0$.)

Exercise 4

Observe that

$$\begin{aligned}
7524 &= 7\cdot 1000 + 5\cdot 100 + 2\cdot 10 + 4 \\
&= 7(999+1) + 5(99+1) + 2(9+1) + 4 \\
&= (7\cdot 999 + 7) + (5\cdot 99 + 5) + (2\cdot 9 + 2) + 4 \\
&= (7\cdot 999 + 5\cdot 99 + 2\cdot 9) + (7+5+2+4) \\
&= (7\cdot 111\cdot 9 + 5\cdot 11\cdot 9 + 2\cdot 9) + (7+5+2+4) \\
&= (7\cdot 111 + 5\cdot 11 + 2)\cdot 9 + (7+5+2+4) \\
&= \text{(an integer divisible by 9)} \\
&\qquad + \text{(the sum of the digits of 7524).}
\end{aligned}$$

Since the sum of the digits of 7524 is divisible by 9, 7524 can be written as a sum of two integers each of which is divisible by 9. It follows from exercise 15 that 7524 is divisible by 9.

Generalize the argument given in this example to any nonnegative integer n. In other words, prove that for any nonnegative integer n, if the sum of the digits of n is divisible by 9, then n is divisible by 9.

Exercise 5

Prove that for any nonnegative integer n, if the sum of the digits of n is divisible by 3, then n is divisible by 3.

Step-by-step solution

Step 1 of 5

(a) We are given that an integer is $637,425,403,705,125$,

The sum of the digits is 54

From the division property, it is divisible by 9

Thus, it is also divisible by 3 (by transitivity of divisibility)

Also, the number is not divisible by 4 because the two rightmost digits are 25, which is not divisible by 4.

Then, $637,425,403,705,125$ is not divisible by 4, because the rightmost digit is 5.

Then $637\ 425\ 403\ 705\ 125$ is divisible by 5

Step 2 of 5

(b) We are given that an integer is $12,858,306,120,312$

The sum of the digits is 42

From the division property, 42 is not divisible by 9,

Therefore, $12,858,306,120,312$ is not divisible by 9.

Also, 42 is divisible by 3

Then the number $12,858,306,120,312$ is divisible by 3

Also, the number is divisible by 4, because the two rightmost digits are 12, which is divisible by 4.

Also, the number is not divisible by 5 because the rightmost digit is neither 0 nor 5.

Step 3 of 5

(c) We are given that an integer is $517,924,440,926,512$

The sum of the digits is 61

From the division property, 61 is not divisible by 9, and so is not divisible by 3 Also, the number is divisible by 4 because the two rightmost digits are 12 , which is divisible by 4.

The number is not divisible by 5 because the rightmost digit is neither 0 nor 5

Step 4 of 5

(d) We are given that an integer is $14,328,083,360,232$

The sum of the digits is 45

From the division property, 45 is divisible by 9

Thus, it is also divisible by 3 (by transitivity of divisibility)

Step 5 of 5

Also, the number is divisible by 4 because the two rightmost digits are 32, which is divisible by 4.

Also, the number is not divisible by 5 because the rightmost digit is neither 0 nor 5.

Chapter 4.4, Problem 37E

Problem

Use the unique factorization theorem to write the following integers in standard factored form.

a. 1,176

b. 5,733

c. 3,675

Step-by-step solution

Step 1 of 4

The objective is to write the following integers in standard factored form.

a. 1176

b. 5733

c. 3675

Step 2 of 4

a.

The provided integer is 1176.

Using the unique factorization theorem, standard form of integer 1176 is written as below.

$$\begin{aligned} 1176 &= 2\times2\times2\times3\times7\times7 \\ &= 2^3\times3\times7^2 \end{aligned}$$

Step 3 of 4

b.

The provided integer is 5733.

Using the unique factorization theorem, standard form of integer 5733 is written as below.

$$\begin{aligned} 5733 &= 3\times3\times7\times7\times13 \\ &= 3^2\times7^2\times13 \end{aligned}$$

Step 4 of 4

c.

The provided integer is 3675.

Using the unique factorization theorem, standard form of integer 3675 is written as below.

$$\begin{aligned} 3675 &= 3\times5\times5\times7\times7 \\ &= 3\times5^2\times7^2 \end{aligned}$$

Chapter 4.4, Problem 38E

Problem

Let n = 8,424.

a. Write the prime factorization for n.

b. Write the prime factorization for $n5$.

c. Is $n5$ divisible by 20? Explain.

d. What is the least positive integer m so that $8{,}424 \cdot m$ is a perfect square?

Step-by-step solution

Step 1 of 4

Consider the given number $n = 8424$.

a.

The objective is to find the prime factorization for n.

Factorize the number as follows,

2	8424
2	4212
2	2106
3	1053
3	351
3	117
3	39
13	13
	0

Thus, the prime factorization is $n = 8424 = 2^3 \times 3^4 \times 13$.

Step 2 of 4

b.

The objective is to find the prime factorization for $n5$.

Factorize the number as follows,

$$\begin{aligned} n^5 &= 8424^5 \\ &= \left(2^3 \times 3^4 \times 13\right)^5 \\ &= 2^{3\times5} \times 3^{4\times5} \times 13^{1\times5} \\ &= 2^{15} \times 3^{20} \times 13^5 \end{aligned}$$

Thus, the prime factorization is $n = 8424^5 = 2^{15} \times 3^{20} \times 13^5$.

Step 3 of 4

c.

The objective is to find whether $n5$ is divisible by 20 or not.

Factorize the number as follows,

$$\begin{aligned} n^5 &= 2^{15} \times 3^{20} \times 13^5 \\ 20 &= 2^2 \times 5 \end{aligned}$$

Observe that 20 has a factor of 5 and 5 is not a factor of 84245.

Thus 84245 is <u>not divisible</u> by 20.

Step 4 of 4

d.

The objective is to find the least positive integer m so that 8,424 x m is a perfect square.

In order for 8424m to be a perfect square, each prime factor must be raised to an even power. For that one 2 and one 13 is necessary.

$$\begin{aligned} n \times 2 \times 13 &= 8424 \times 2 \times 13 \\ &= 2^3 \times 3^4 \times 13 \times 2 \times 13 \\ &= 2^4 \times 3^4 \times 13^2 \\ &= \left(2^2 \times 3^2 \times 13\right)^2 \end{aligned}$$

Thus the smallest integer is $m = 26$.

Chapter 4.4, Problem 39E

Problem

Suppose that in standard factored form $a = p_1^{e_1} p_2^{e_2} \cdots p_k^{e_k}$, where k is a positive integer; $p1$, $p2$, ..., pk are prime numbers; and e1, $e2$, ..., ek are positive integers.

a. What is the standard factored form for $a3$?

---

b. Find the least positive integer k such that 24 • 35 • 7 • 112 • k is a perfect cube (i.e., equals an integer to the third power). Write the resulting product as a perfect cube.

Step-by-step solution

Step 1 of 4

For a positive integer k, the standard factored form is written as,

$$a = p_1^{e_1} p_2^{e_2} \cdots p_k^{e_k}$$

Here $p_1, p_2, ..., p_k$ are prime numbers and $e_1, e_2, ...e_k$ are positive integers.

Step 2 of 4

(a)

The objective is to find the standard factored form for a^3.

The standard factored form for $a^3 = \left(p_1^{e_1} \cdot p_2^{e_2} \cdots p_k^{e_k}\right)^3$

$$= \left(p_1^{e_1}\right)^3 \cdot \left(p_2^{e_2}\right)^3 \cdots \left(p_k^{e_k}\right)^3$$

$$= p_1^{3e_1} \cdot p_2^{3e_2} \cdots p_k^{3e_k}$$

Hence, the standard factored form for a^3 is $a^3 = \boxed{p_1^{3e_1} \cdot p_2^{3e_2} \cdots p_k^{3e_k}}$.

Step 3 of 4

(b)

Consider the perfect cube, $2^4 \cdot 3^5 \cdot 7 \cdot 11^2 \cdot k$

The objective is to find the least positive integer k.

Now, find the lowest positive integer k, such that $2^4 \cdot 3^5 \cdot 7 \cdot 11^2 \cdot k$ is a perfect cube.

Perfect cube is equals an integer to the third power.

Take the least positive integer $k = 2^2 \cdot 3^1 \cdot 7^2 \cdot 11$

$$2^4 \cdot 3^5 \cdot 7 \cdot 11^2 \cdot k = 2^4 \cdot 3^5 \cdot 7 \cdot 11^2 \cdot 2^2 \cdot 3^1 \cdot 7^2 \cdot 11$$

$$= 2^6 \cdot 3^6 \cdot 11^3 \cdot 7^3$$

$$= \left(2^2\right)^3 \cdot \left(3^2\right)^3 \cdot 11^3 \cdot 7^3$$

$$= \left(2^2 \cdot 3^2 \cdot 11 \cdot 7\right)^3$$

$$= (2772)^3$$

Step 4 of 4

By the definition of a perfect cube,

$$k = 2^2 \cdot 3^1 \cdot 7^2 \cdot 11$$

$$= 4 \cdot 3 \cdot 49 \cdot 11$$

$$k = 6468$$

Hence, the least positive integer is $k = \boxed{6468}$.

Chapter 4.4, Problem 40E

Problem

a. If *a* and *b* are integers and 12*a* = 25*b*, does 12 | *b*? does 25 | *a?* Explain.

b. If *x* and *y* are integers and 10*x* = 9*y*, does 10 | *y?* does 9 | *x* ? Explain.

Step-by-step solution

Step 1 of 2

(a) Suppose *a* and *b* are integers and $12a = 25b$

12 divides *b* because $12a = 25b$.

The unique factorization theorem guarantees that the standard factored form of $12a$ and $25b$ must be the same.

Thus, $25b$ contains the factors $2^2 \cdot 3(=12)$

However, since neither 2 nor 3 divide 25, the factors 2^2 and 3 all occur in *b*

Thus, $12 \mid b$

Similarly, $12a$ contains the factors $5^2 = 25$

Since 5 is not a factor of 12, the factors 5^2 must occur in *a*

So $25 \mid a$

Step 2 of 2

(b) It is given that $10x = 9y$

10 divides *y*, because, from the unique factorization theorem, we know that the standard factored form of $10x$ and $9y$ must be the same.

Thus, $9y$ contains the factors $2 \cdot 5(=10)$

However, since neither 2 nor 5 divide 9, the factors 2·5 must all occur in *y*

Thus, $10 \mid y$.

Similarly, $10x$ contains the factors $3^2(=9)$, since 3 is not a factor of 10, the factors 3^2 must occur in x.

So $9 \mid x$

Chapter 4.4, Problem 41E

Problem

How many zeros are at the end of 458 • 885? Explain how you can answer this question without actually computing the number. *(Hint:* 10 = 2 • 5.)

Step-by-step solution

Step 1 of 3

Consider the number,

$45^8 \cdot 88^5$

The objective is to find the numbers of zeros are present at the end of the number $45^8 \cdot 88^5$ without actually computing.

Step 2 of 3

Take the factors of the two numbers as follows;

$45 = 3 \cdot 3 \cdot 5$

$88 = 2 \cdot 2 \cdot 2 \cdot 11$

Use the factors in the number $45^8 \cdot 88^5$

$$\begin{aligned} 45^8 \cdot 88^5 &= (3 \cdot 3 \cdot 5)^8 \cdot (2 \cdot 2 \cdot 2 \cdot 11)^5 \\ &= (2^3)^5 \cdot (3^2)^8 \cdot (5)^8 \cdot (11)^5 \\ &= 2^{15} \cdot 3^{16} \cdot 5^8 \cdot (11)^5 \\ &= 2^7 \cdot 2^8 \cdot 3^{16} \cdot 5^8 \cdot (11)^5 \end{aligned}$$

Comments (1)

Why separate 2^15 into 2^7 and 2^8?

Step 3 of 3

Rearrange the above factors as,

$45^8 \cdot 88^5 = \{2^7 \cdot 3^{16} \cdot 11^5\}\{2^8 \cdot 5^8\}$

$= \{2^7 \cdot 3^{16} \cdot 11^5\}(2 \cdot 5)^8$ Since $a^n \cdot b^n = (a \cdot b)^n$

$= \{2^7 \cdot 3^{16} \cdot 11^5\}(10^8)$

Hence, there are 8 zeros in the multiple of the number $45^8 \cdot 88^5$.

Here the term 10 is separated from the remaining non-zero product of the factors.

Chapter 4.4, Problem 42E

Problem

If n is an integer and $n > 1$, then n! is the product of n and every other positive integer that is less than n. For example, 5! =5 • 4 • 3 • 2 • 1.

a. Write 6! in standard factored form.

b. Write 20! in standard factored form.

c. Without computing the value of (20!)2 determine how many zeros are at the end of this number when it is written in decimal form. Justify your answer.

Step-by-step solution

Step 1 of 4

Consider n be an integer greater than 1 then $n!$ is the product of n and every positive integer that is less than n.

Step 2 of 4

(a)

The objective is to write $6!$ in standard factored form.

By the definition 6! can be written as,

$$6! = 6\times5\times4\times3\times2\times1$$

Now factor the numbers into product of primes as:

$$\begin{aligned}6! &= 2\times3\times5\times2\times2\times3\times2\times1\\ &= 2^4\times3^2\times5\end{aligned}$$

Therefore, the standard factored form of $6!$ is $\boxed{2^4\times3^2\times5}$

Step 3 of 4

(b)

Next objective is to write $20!$ in the standard factored form. By the definition 20! can be written as,

$$20! = 20\cdot19\times18\times17\times16\times15\times14\times13\times12\times11\times10\times9\times8\times7\times6\times5\times4\times3\times2\times1$$

Now factor the numbers into product of primes as,

$$\begin{aligned}20! &= (2\times2\times5)\times19\times(2\times3\times3)\times17\times(2\times2\times2\times2)\times(3\times5)\times(2\times7)\times13\times(2\times2\times3)\\ &\quad\times11\times(2\times5)\times(3\times3)\times(2\times2\times2)\times7\times(2\times3)\times5\times(2\times2)\times3\times2\times1\\ &= 2^{18}\times3^8\times5^4\times7^2\times11\times13\times17\times19\end{aligned}$$

Therefore, the standard factored form of 20! is $\boxed{2^{18}\times3^8\times5^4\times7^2\times11\times13\times17\times19}$

Step 4 of 4

(c)

The objective is to determine the number of zeros at the number of the number $(20!)^2$ when it is written in decimal form.

For this write $(20!)^2$ in standard factored form as follows:

$$\begin{aligned}(20!)^2 &= (2^{18})^2\times(3^8)^2\times(5^4)^2\times(7^2)^2\times(11)^2\times(13)^2\times(17)^2\times(19)^2\\ &= 2^{36}\times3^{16}\times5^8\times7^4\times11^2\times13^2\times17^2\times19^2\\ &= 10^8\times(2^{28}\times3^{16}\times7^4\times11^2\times13^2\times17^2\times19^2)\end{aligned}$$

Since the number 10 does not divide $2^{28}\times3^{16}\times7^4\times11^2\times13^2\times17^2\times19^2$ therefore the number of 0 at the end of the $(20!)^2$ is $\boxed{8}$.

Chapter 4.4, Problem 43E

Problem

At a certain university 2/3 of the mathematics students and 3/5 of the computer science students have taken a discrete mathematics course. The number of mathematics students who have taken the course equals the number of computer science students who have taken the course. If there are at least 100 mathematics students at the university, what are the least possible number of mathematics students and the least possible number of computer science students at the university?

Step-by-step solution

Step 1 of 2

Consider the given statement.

Two third of math's student and three-fifth of the computer science student have chosen mathematical course. Two third of math's students equals three-fifth of the computer science students. There are a minimum 100 mathematics students at the university.

The objective is to find the least possible number of both mathematics and computer science students at the university.

Step 2 of 2

Let x and y be the number of mathematics and computer science students respectively.Then,

$$x \geq 100$$
$$\frac{2}{3}x = \frac{3}{5}y$$
$$10x = 9y$$

Thus observe that 9 divides the RHS of the above equation, since 9 is a multiple of 9y. Thus 9 should divides 10x as it is an equation. Observe that 9 does not divides 10 and then 9 should divides x.

The least possible integer which is a multiple of 9 and greater than or equal to 100 is 108.

Thus, $x = 108$.

$$10x = 9y$$
$$y = \frac{10}{9}x$$
$$= \frac{10}{9} \times (108)$$
$$= 120$$

Thus, there are <u>108</u> mathematics students and <u>120</u> computer science students.

Chapter 4.4, Problem 44E

Problem

Prove that if *n* is any nonnegative integer whose decimal representation ends in 0, then 5 | *n*. *(Hint:* If the decimal representation of a nonnegative integer *n* ends in *d*0, then *n* = 10*m* + *d*0 for some integer *m*.)

Step-by-step solution

Step 1 of 1

The objective is to proof that if n is any nonnegative integer whose decimal representation ends in 0, then $5|n$.

Proof:

Suppose n is a nonnegative integer whose decimal representation ends in 0.

The decimal representation of n is an expression of the form,

$d_k d_{k-1} \ldots d_2 d_1 d_0$

Where k is a nonnegative integer and d_2, d_1, d_0, d_k are integers from 0 to 9 inclusive.

So, the nonnegative integer can be expressed as,

$$\begin{aligned} n &= 10m + d_0 \\ &= 10m + 0 \end{aligned}$$ for some integers m.

And $d_0 = 0$ because the decimal representation is ends in 0.

Now factories the term $10m$ as,

$$\begin{aligned} n &= 10m \\ &= 5(2m) \end{aligned}$$

So, $2m$ is an integer since m is an integers.

Hence $10m$ is divisible by 5.

Therefore, the number n is divisible by 5.

Chapter 4.4, Problem 45E

Problem

Prove that if *n* is any nonnegative integer whose decimal representation ends in 5, then 5 | *n*.

Step-by-step solution

Step 1 of 1

The objective is to prove that if n is any nonnegative integer whose decimal representation ends in 5, then $5 \mid n$.

Suppose n is nonnegative integer whose decimal representation ends in 5.

By definition, for some integer $k \geq 0$,

$$n = d_k \cdot 10^k + d_{k-1} \cdot 10^{k-1} + \cdots + d_2 \cdot 10^2 + d_1 \cdot 10 + 5$$

Factoring out 5, n can be written as:

$$n = 5\left(d_k \cdot 2 \cdot 10^{k-1} + d_{k-1} \cdot 2 \cdot 10^{k-2} + \cdots + d_2 \cdot 2 \cdot 10^1 + d_1 \cdot 2 + 1\right)$$

Here, $d_k \cdot 2 \cdot 10^{k-1} + d_{k-1} \cdot 2 \cdot 10^{k-2} + \cdots + d_2 \cdot 2 \cdot 10^1 + d_1 \cdot 2 + 1$ is an integer as sums and products of integers are integers.

Hence n is divisible by 5.

Chapter 4.4, Problem 46E

Problem

Prove that if the decimal representation of a nonnegative integer *n* ends in *d*1*d*0 and if 4 | (10*d*1 + *d*0), then 4 | *n*. (*Hint:* If the decimal representation of a nonnegative integer *n* ends in *d*1 *d*0, then there is an integer *s* such that *n* = 100*s* + 10*d*1 + *d*0.)

Step-by-step solution

Step 1 of 2

Proof:

Let us assume that the decimal representation of a nonnegative integer *n* ends in $d_1 d_0$.

Then

$$n = d_k 10^k + d_{k-1} 10^{k-1} + \cdots + d_2 10^2 + d_1 10 + d_0$$

Where *k* is nonnegative integer and all d_i are integers from 0 to 9.

Now,

$$n = d_k 10^k + d_{k-1} 10^{k-1} + \cdots + d_2 10^2 + d_1 10 + d_0$$
$$= 100\left(d_k 10^{k-2} + d_{k-1} 10^{k-3} + \cdots + d_2\right) + 10d_1 + d_0$$

Now, let $s = d_k 10^{k-2} + d_{k-1} 10^{k-3} + \cdots + d_2$.

Then *s* is an integer. Because sum of product of integers is also an integer.

Thus,

$$n = 100s + 10d_1 + d_0 \quad \ldots(1)$$

Step 2 of 2

Again, let $4 \mid (10d_1 + d_0)$.

Then,

$10d_1 + d_0 = 4m$ for some integer m. $\ldots(2)$

Now from (1),

$$n = 100s + 10d_1 + d_0$$
$$= 100s + 4m \text{ using } (2)$$
$$= 4(25s + m)$$

But $(25s + m)$ is an integer. Because sum of product of integers is also an integer.

Thus, by the definition of divisibility, $4 \mid n$.

Hence proved the desired result.

Chapter 4.4, Problem 47E

Problem

Observe that

$$\begin{aligned}7524 &= 7\cdot 1000 + 5\cdot 100 + 2\cdot 10 + 4\\ &= 7(999+1) + 5(99+1) + 2(9+1) + 4\\ &= (7\cdot 999 + 7) + (5\cdot 99 + 5) + (2\cdot 9 + 2) + 4\\ &= (7\cdot 999 + 5\cdot 99 + 2\cdot 9) + (7+5+2+4)\\ &= (7\cdot 111\cdot 9 + 5\cdot 11\cdot 9 + 2\cdot 9) + (7+5+2+4)\\ &= (7\cdot 111 + 5\cdot 11 + 2)\cdot 9 + (7+5+2+4)\\ &= \text{(an integer divisible by 9)}\\ &\qquad + \text{(the sum of the digits of 7524).}\end{aligned}$$

Since the sum of the digits of 7524 is divisible by 9, 7524 can be written as a sum of two integers each of which is divisible by 9. It follows from exercise 15 that 7524 is divisible by 9.

Generalize the argument given in this example to any nonnegative integer *n*. In other words, prove that for any nonnegative integer *n*, if the sum of the digits of *n* is divisible by 9, then *n* is divisible by 9.

Step-by-step solution

Step 1 of 2

Consider the statement, "for any non-negative integer n, if the sum of digits of n is divisible by 9, then n is divisible by 9.

Step 2 of 2

Objective is to provide the proof of the above statement.

For this suppose n is any positive integer with $k+1$ digit.

So,

$$n = a_0 + a_1 \times 10 + a_2 \times 10^2 + \ldots + a_k \times 10^k$$

Consider, s be the sum of the digits:

$$s = a_0 + a_1 + a_2 + \ldots + a_k$$

Now consider,

$$n - s = (a_0 - a_0) + (a_1 \times 10 - a_1) + (a_2 \times 10^2 - a_2) + \ldots + (a_k \times 10^k - a_k)$$

Or,

$$n - s = a_1(10-1) + a_2(10^2-1) + \ldots + a_k(10^k - 1)$$

If,

$$b_x = 10^x - 1$$

Then,

$$n - s = a_1 \times b_1 + a_2 \times b_2 + \ldots + a_x \times b_x$$

So,

$$\begin{aligned} b_x &= 10^x - 1\\ &= 99\ldots\end{aligned}$$

Then,

$$b_x = 9\ldots 9(9 \text{ occurs } x \text{ times})$$

This shows that all the numbers b_x are divisible by 9 so the numbers $a_x b_x$ are divisible by 9 and so sum of all the numbers $a_x b_x$ are divisible by 9. This implies that $n - s$ is divisible by 9.

Therefore, n is divisible by 9 then so is the sum s is also and vice versa.

Chapter 4.4, Problem 48E

Problem

Prove that for any nonnegative integer *n*, if the sum of the digits of *n* is divisible by 3, then *n* is divisible by 3.

Step-by-step solution

Step 1 of 2

The objective is to prove that for any nonnegative integer n, if the sum of the digits of n is divisible by 3, then n is divisible by 3.

Suppose n is any positive integer with $k+1$ digit.

So, $n = a_0 + a_1 \cdot 10 + a_2 \cdot 10^2 + .. + a_k \cdot 10^k$.

Let s be the sum of the digits:

$$s = a_0 + a_1 + a_2 + .. + a_k$$

Now,

$$n - s = (a_0 - a_0) + (a_1 \cdot 10 - a_1) + (a_2 \cdot 10^2 - a_2) + .. + (a_k \cdot 10^k - a_k)$$
$$n - s = a_1(10-1) + a_2(10^2 - 1) + ... + a_k(10^k - 1)$$

Step 2 of 2

If $b_x = 10^x - 1$, then

$$n - s = a_1 \cdot b_1 + a_2 \cdot b_2 + ... + a_n \cdot b_n$$

So,

$$\begin{aligned} b_x &= 10^x - 1 \\ &= 99... \end{aligned}$$

It is seen that $b_x = 9...9(9 \text{ occurs } x \text{ times})$.

Implies that, all the numbers b_x are divisible by 3 because it is divisible by 9.

Hence, all the numbers $a_x b_x$ are divisible by 3.

So, their sum $n - s$ is divisible by 3.

Therefore, n is divisible by 3 then so is sum s and vice versa.

Chapter 4.4, Problem 49E

Problem

Given a positive integer *n* written in decimal form, the alternating sum of the digits of *n* is obtained by starting with the right-most digit, subtracting the digit immediately to its left, adding the next digit to the left, subtracting the next digit, and so forth. For example, the alternating sum of the digits of 180,928 is 8 − 2 + 9 − 0 + 8 − 1 = 22. Justify the fact that for any nonnegative integer *n*, if the alternating sum of the digits of *n* is divisible by 11, then *n* is divisible by 11.

Step-by-step solution

Step 1 of 4

Consider any non-negative integer n, objective is to show that if the alternating sum of digits of n is divisible by 11, then n is divisible by 11.

Step 2 of 4

For this, prove the more general statements which says that, for $n \in N^+$ if a_n is the alternating right to lefty sum of its digits, then $n \equiv a_n \pmod{11}$.

So, consider $n \in N^+$ then,

$$n = 10^k a_0 + 10^{k-1} a_1 + \cdots + 10 a_{k-1} + a_k$$

Since,

$$10^t \equiv (-1)^t \pmod{11}$$

For prove it, note that $10 = 11 - 1$ and therefore, $10^t = (11-1)^t$

When this binom is expanded with the help of binomial theorem, every term but the last will be divisible by 11 as a product of power of 11 and a binomial coefficient. The last term will be $(-1)^t$.

Thus,

$$n \equiv (-1)^k a_0 + (-1)^{k-1} a_1 + \cdots + (-1)^1 a_{k-1} + a_k \pmod{11}.$$

Hence proved

Suppose n be a $d \geq 2$ digits nonnegative integer. Suppose $x_d, x_{d-1}, \ldots, x_2, x_1$ be the digits of n from left side. Then we can write

$$\begin{aligned} n &= 10^{d-1} x_d + 10^{d-2} x_{d-1} + \ldots + 10 x_2 + x_1 \\ &= (11-1)^{d-1} x_d + \ldots + (11-1)^3 x_4 + (11-1)^2 x_3 + (11-1) x_2 + x_1 \\ &= \left[(11-1)^{d-1} + (-1)^d\right] x_d + \ldots + \left[(11-1)^3 + 1\right] x_4 + \left[(11-1)^2 - 1\right] x_3 + \left[(11-1) + 1\right] x_2 \\ &\quad + \left((-1)^{d-1} x_d + \ldots + x_3 - x_2 + x_1\right) \end{aligned}$$

Step 3 of 4

Now

$$(11-1)^{d-1} + (-1)^d = \begin{cases} (11-1)^{d-1} + 1; d \text{ is even.} \\ (11-1)^{d-1} - 1; d \text{ is odd.} \end{cases}$$

For all even integer $d \geq 2$, $(11-1)+1 = 11$ is a factor of $(11-1)^{d-1} + 1$

For all odd integer $d \geq 2$, $(11-1)+1 = 11$ is a factor of $(11-1)^{d-1} - 1$

Hence, for all $d \geq 2$, 11 is a factor of $(11-1)^{d-1} + (-1)^d$

Step 4 of 4

Then, $\left[(11-1)^{d-1} + (-1)^d\right] x_d + \ldots + \left[(11-1)^2 - 1\right] x_3 + \left[(11-1) + 1\right] x_2$ is divisible by 11.

Thus, if the alternative sum $(-1)^{d-1} x_d + \ldots + x_3 - x_2 + x_1$ of digits of n is divisible by 11, then n can be express as a sum of two integers each of which divisible by 11 and hence $11 \mid n$.

Therefore, if the alternative sum of the digits of n is divisible by 11, then n is divisible by 11.

Chapter 4.4, Problem 50E

Problem

The integer 123,123 has the form *abc,abc*, where *a*, *b*, and *c* are integers from 0 through 9. Consider all six-digit integers of this form. Which prime numbers divide every one of these integers? Prove your answer.

Step-by-step solution

Step 1 of 2

Consider the given statement.

The integer $123,123$ has the form $abcabc$, where a,b, and c are integers from 0 through 9. Consider all six-digit integers of this form.

The objective of the problem is to find and prove all the prime numbers that divide all the integers of the form $abcabc$.

Step 2 of 2

Proof: Let n be any integer of the form $abcabc$ where a,b, and c are integers from 0 through 9. Then

$$\begin{aligned} n &= a\times10^5+b\times10^4+c\times10^3+a\times10^2+b\times10+c \\ &= 10^3(100a+10b+c)+(100a+10b+c) \\ &= (100a+10b+c)(10^3+1) \\ &= 1001(100a+10b+c) \\ &= 7\times11\times13(100a+10b+c) \end{aligned}$$

Thus 7, 11, and 13 all divide *n*.

Hence the only prime number that divide every integer of the given form are 7, 11, and 13.

Chapter 4.5, Problem 1E

Problem

For the values of n and d given, find integers q and r such that $n = dq + r$ and $0 \le r$.

Exercise

$n = 70$, $d = 9$

Step-by-step solution

Step 1 of 1

It is given that $n = 70,\ d = 9$

From the quotient-remainder theorem,

$70 = 7(9) + 7$

Comparing with $n = qd + r$,we get

$q = 7$ and $r = 7$

i.e., quotient $= 7$ and remainder = 7

Chapter 4.5, Problem 2E

Problem

For the values of n and d given, find integers q and r such that $n = dq + r$ and $0 \le r$.

Exercise

$n = 62$, $d = 7$

Step-by-step solution

Step 1 of 1

It is given that $n = 62, d = 7$

From the quotient-remainder theorem,

$62 = 8(7) + 6$

Comparing with $n = qd + r$, we get

$q = 8$, $r = 6$

Quotient = 8 and remainder = 6

Chapter 4.5, Problem 3E

Problem

For the values of n and d given, find integers q and r such that $n = dq + r$ and $0 \le r$.

Exercise

$n = 36$, $d = 40$

Step-by-step solution

Step 1 of 1

It is given that $n = 36,\ d = 40$

From the quotient-remainder theorem,

$36 = 0(40) + 36$

Comparing with $n = qd + r$, we get

$q = 0$ and $r = 36$

i.e., quotient = 0 and remainder = 36

Chapter 4.5, Problem 4E

Problem

For the values of *n* and *d* given, find integers *q* and *r* such that *n* = *dq* + *r* and 0 ≤ *r*.

Exercise

n = 3, *d* = 11

Step-by-step solution

Step 1 of 3

Consider the values $n = 3$ and $d = 11$.

The objective is to find the integers *q* and *r* such that $n = qd + r$ and $0 \le r < d$.

Step 2 of 3

Find the integers *q* and *r* as,

Theorem:

Given any integer *n* and positive integer *d*, there exist unique integer *q* and *r* such that

$n = qd + r$ and $0 \le r < d$

Step 3 of 3

By the quotient-remainder theorem,

For $n = 3$ and $d = 11$

$3 = 0(11) + 3$ ..... (1)

Compare equation (1) with $n = qd + r$, obtain $q = 0$ and $r = 3$ and $0 \le 3 < 11$.

Therefore, the integers $q = 0$ and $r = 3$.

Chapter 4.5, Problem 5E

Problem

For the values of n and d given, find integers q and r such that $n = dq + r$ and $0 \le r$.

Exercise

$n = -45$, $d = 11$

Step-by-step solution

Step 1 of 1

It is given that $n = -45,\ d = 11$

By the quotient-remainder theorem,

$-45 = -5(11) + 10$

Comparing with $n = qd + r$, we get $q = -5$ and $r = 10$

i.e., quotient = - 5 and remainder = 10

Chapter 4.5, Problem 6E

Problem

For the values of n and d given, find integers q and r such that $n = dq + r$ and $0 \le r$.

Exercise

$n = -27$, $d = 8$

Step-by-step solution

Step 1 of 1

It is given that $n = -27, d = 8$

By the quotient remainder theorem,

$-27 = 8(-4) + 5$

Comparing with $n = qd + r$, we get $q = -4$ and $r = 5$

i.e., quotient = - 4 and remainder = 5

Chapter 4.5, Problem 7E

Problem

Evaluate the expression.

Exercise

a. 43 *div* 9

---

b. 43 *mod* 9

Step-by-step solution

Step 1 of 2

(a) $43 \text{ div } 9$

$$\begin{array}{r|l} & 4 \leftarrow 43 \text{ div } 9 \\ 9 & 43 \\ & \underline{36} \\ & 7 \end{array}$$

i.e., $43 = 4(9) + 7$

$\Rightarrow 43 \text{ div } 9 =$ the quotient when 43 is divided by 9

$= 4$

Step 2 of 2

(b) 43 mod 9

$$\begin{array}{r|l} & 4 \\ 9 & 43 \\ & \underline{36} \\ & 7 \quad \leftarrow 43 \text{ mod } 9 \end{array}$$

i.e., $43 = 4(9) + 7$

$\Rightarrow 43 \text{ mod } 9 =$ the remainder when 43 is divided by 9

$= 7$

Chapter 4.5, Problem 8E

Problem

Evaluate the expression.

Exercise

a. 50 *div* 7

b. 50 *mod* 7

Step-by-step solution

Step 1 of 2

(a) 50 div 7

$$\begin{array}{r} \mathbf{7} \\ 7\overline{)50} \\ \underline{49} \\ 1 \end{array} \leftarrow 50 \; div \; 7$$

i.e., $50 = 7(7) + 1$

$\Rightarrow 50 \text{ div } 7 =$ the quotient when 50 is divided by 7

$= 7$

Step 2 of 2

(b) 50 mod 7

$$\begin{array}{r} 7 \\ 7\overline{)50} \\ \underline{49} \\ \mathbf{1} \end{array} \leftarrow 50 \bmod 7$$

i.e., $50 = 7(7) + 1$

$\Rightarrow 50 \bmod 7 =$ the remainder when 50 is divided by 7

$= 1$

Chapter 4.5, Problem 9E

Problem

Evaluate the expression.

Exercise

a. 28 *div* 5

b. 28 *mod* 5

Step-by-step solution

Step 1 of 2

(a) 28 div 5

$$\begin{array}{r|l} & 5 \leftarrow 50 \text{ div } 7 \\ 5 & 28 \\ & 25 \\ \hline & 3 \end{array}$$

i.e. $28 = 5(5) + 3$

$\Rightarrow 28 \text{ div } 5 =$ the quotient when 28 is divided by 5.

= 5

Step 2 of 2

(b) 28 mod 5

$$\begin{array}{r|l} & 5 \\ 5 & 28 \\ & 25 \\ \hline & 3 \quad \leftarrow 28 \bmod 5 \end{array}$$

i.e. $28 = 5(5) + 3$

$\Rightarrow 28 \bmod 5 =$ the remainder when 28 is divided by 5

$= 3$

Chapter 4.5, Problem 10E

Problem

Evaluate the expression.

Exercise

a. 30 *div* 2

b. 30 *mod* 2

Step-by-step solution

Step 1 of 2

(a) 30 div 2

$$\begin{array}{r|l} & \overset{15 \leftarrow 30 \text{ div } 2}{} \\ 2 & 30 \\ & 30 \\ \hline & 0 \end{array}$$

i.e., $30 = 2(15) + 0$

$\Rightarrow 30 \text{ div } 2 =$ quotient when 30 is divided by 2

= 15

Step 2 of 2

(b) 30 mod 2

$$\begin{array}{r|l} & \overset{15}{} \\ 2 & 30 \\ & 30 \\ \hline & 0 \qquad \leftarrow 30 \bmod 2 \end{array}$$

i.e., $30 = 2(15) + 0$

$\Rightarrow 30 \bmod 2 =$ remainder when 30 is divided by 2

$= 0$

Chapter 4.5, Problem 11E

Problem

Check the correctness of formula for the following values of *DayT* and *N*.

Formula

DayN = (DayT + N) mod 7,

a. *DayT* = 6 (Saturday) and *N* = 15

b. *DayT* = 0 (Sunday) and *N* = 7

c. *DayT* = 4 (Thursday) and *N* = 12

Step-by-step solution

Step 1 of 3

If day *T* is the day of the week today, and day *N* is the day of the week in *N* days,

Then, day *N* = (day *T* + *N*) mod 7

Where Sunday = 0, Monday = 1, Tuesday = 2, Wednesday = 3, Thursday = 4, Friday = 5, Saturday = 6.

Step 2 of 3

(a) Day *T* = 6 (Saturday) and *N* = 15

$$\therefore \text{Day } N = (6+15) \bmod 7$$

$$= 21 \bmod 7$$

$$= 0$$

Because

$$\begin{array}{r|l} & 3 \\ 7 & 21 \\ & \underline{21} \\ & 0 \quad \leftarrow 21 \bmod 7 \end{array}$$

Thus, the day of the week in 15 days is Sunday

Step 3 of 3

(b) Day *T* = 0 (Saturday) and *N* = 7

$$\therefore \text{Day } N = (0+7) \bmod 7$$

$$= 7 \bmod 7$$

$$= 0$$

Because

$$\begin{array}{r|l} & 1 \\ 7 & 7 \\ & \underline{7} \\ & 0 \quad \leftarrow 7 \bmod 7 \end{array}$$

Thus, if today is Sunday, then the day of the week in 7 days is Sunday

(c) Day *T* = 4 (Thursday) and *N* = 12

$$\therefore \text{Day } N = (4+12) \bmod 7$$

$$= 16 \bmod 7$$

$$= 2$$

Because

$$\begin{array}{r|l} & 2 \\ 7 & 16 \\ & \underline{14} \\ & 2 \quad \leftarrow 16 \bmod 7 \end{array}$$

Thus, if today is Thursday, then the day of the week in 12 days is Tuesday

Chapter 4.5, Problem 12E

Problem

Justify formula for general values of *DayT* and *N*.

Formula

DayN = (DayT + N) mod 7,

Step-by-step solution

Step 1 of 3

Conveniently, the days of the week are assigned to the code 0 through 6 for Sunday to Saturday, respectively.

So a day is identified with respect to its code

The Quotient-Remainder Theorem

For each of the following values of n and d, find integers q and r such that

$n = dq + r$ and $0 \le r < d$

Step 2 of 3

Now, if *T* stands for today's number, then the day after *N* days, which can be counted from today to the day after the given number of days, is given in the Quotient-Remainder Theorem.

Since day *N* stands for the *N*th day from today.

Day *N* = (day *T* +*N*) mod 7.

Step 3 of 3

If the *N* days are after so many years, which include the leap year, then *N* must include the years with 366 days.

Since there are 7 days in a week, in adding *N* to the code of today, the counting starts from the existing date. And by dividing the sum with 7, the remainder will be between 0 and 6, which will be a code of a particular day of the week.

That day will be the *N*th day from today.

Thus, the formula Day *N* = (Day *T* +*N*) mod 7 to find the *N*th day from today is justified

Chapter 4.5, Problem 13E

Problem

On a Monday a friend says he will meet you again in 30 days. What day of the week will that be?

Step-by-step solution

Step 1 of 1

Monday = 1= day T

It is given that N = 30 days

We have

$$\begin{aligned}\text{Day } N &= (\text{Day } T + N) \bmod 7\\ &= (1+30) \bmod 7\\ &= 31 \bmod 7\\ &= 3\end{aligned}$$

Because

$$\begin{array}{r|l} & 4 \\ \hline 7 & 31 \\ & \underline{28} \\ & 3 \qquad \leftarrow 31 \bmod 7 \end{array}$$

Thus, the day of the week is Wednesday

Chapter 4.5, Problem 14E

Problem

If today is Tuesday, what day of the week will it be 1,000 days from today?

Step-by-step solution

Step 1 of 3

Consider the following situation where today is Tuesday.

The objective is to find the day of the week after 1000 days from today and today is Tuesday.

Step 2 of 3

There are 1000 days given. And in a week there are 7 days.

So, the number of weeks present in the 1000 days is calculated below.

So,

$$1000 \; div \, 7 = 142$$

There are 142 weeks in 1000 days.

Step 3 of 3

Now, there are 142 weeks in 1000 days and $1000 \mod 7 = 6$.

This means that there are 6 extra days.

And, $1000 = 142 \times 7 + 6$.

Thus, 142 weeks from today will be Tuesday and 6 days after that will be $\boxed{\text{Monday}}$.

Chapter 4.5, Problem 15E

Problem

January 1, 2000, was a Saturday, and 2000 was a leap year. What day of the week will January 1, 2050, be?

Step-by-step solution

Step 1 of 5

Consider January 1, 2000 was Sunday and 2000 was a leap year.

The objective is to tell that what day of the week January 1, 2050 will be.

Step 2 of 5

Consider the following formula:

$DayN = (DayT + N) \bmod 7$ where *DayT* is the day of the week today and *DayN* is the day of the week in *N* days.

Here, $\text{Sunday} = 0, \text{Monday} = 1, \ldots, \text{Saturday} = 6$.

Since Saturday is repeated by a 6. This implies $DayT = 6$

According to question it is required to consider Saturday $(DayT)$ that comes after 50 years.

Step 3 of 5

It is given that January 1, 2000 was a Saturday between 2000 and 2050, i.e., in 50 years there are 13 leap years, namely 2000, 2004, 2008, 2012, 2016, 2020, 2028, 2032, 2036, 2040, 2044, 2048, and 37 non-leap years.

Every non-leap year has 365 days in a year and every leap-year has 366 days in a year.

This implies,

$$\begin{aligned} 50 \text{ years } &= 13(366) + 37(365) \\ &= 18,263 \text{ days} \end{aligned}$$

Comments (1)

it says 13 then lists 12 leap years and 12 is the correct number of leap years so it should really be 18,262 days.

Step 4 of 5

Consider the formula, $DayN = (DayT + N) \bmod 7$

Obtain the value of $(DayT + N)$.

$$\begin{aligned} (DayT + N) &= 6 + 18,263 \\ &= 18,269 \end{aligned}$$

Step 5 of 5

Divide the above number by 7 manually using long division method.

$$\begin{array}{r} 2609 \\ 7\overline{)18269} \\ \underline{1400} \\ 4269 \\ \underline{4200} \\ 69 \\ \underline{63} \\ 6 \end{array}$$

The number at the bottom of the long division is the remainder, that is 6.

$$\begin{aligned} DayN &= (DayT + N) \bmod 7 \\ &= 18269 \bmod 7 \\ &= 6 \end{aligned}$$

Since 6 corresponds with Saturday.

Thus, as January 1, 2000 was a Saturday, and so 50 years from then, i.e., January 1, 2050, will be the same day again, i.e., Saturday.

Comments (2)

There should be 12 leap years between 2000 and 2050. cuz 50 div 4 = 12. Thus, we have 50-12=38 normal years. So 12*366 + 38*365 = 18262 days. DayN = (6 + 18262) mod 7 = 5. Should be Friday ;P

^ correct

Chapter 4.5, Problem 16E

Problem

Suppose *d* is a positive integer and *n* is any integer. If *d* | n, what is the remainder obtained when the quotient-remainder theorem is applied to *n* with divisor *d*?

Step-by-step solution

Step 1 of 1

Suppose d is a positive integer and n is any integer, let $d \mid n$

Since $d \mid n$, by the quotient-remainder theorem,

$n = dv + 0$, for some integer *v*

It follows that $r = 0$

Thus, the remainder is 0

Chapter 4.5, Problem 17E

Problem

Prove directly from the definitions that for every integer *n*, *n*2 – *n* + 3 is odd. Use division into two cases: *n* is even and *n* is odd.

Step-by-step solution

Step 1 of 3

Consider the given statement.

For every integer *n*, $n^2 - n + 3$ is odd.

The objective of this problem is to prove the given statement.

Step 2 of 3

Proof:

Let $n \in \mathbb{Z}$.

Consider two cases *n* as an even number and *n* as an odd number.

Case 1:

Let *n* be an even integer. Then, $n = 2k$ for some integer *k*.

$$\begin{aligned} n^2 - n + 3 &= (2k)^2 - 2k + 3 && [\text{by substitution}] \\ &= 4k^2 - 2k + 2 + 1 \\ &= 2(2k^2 - k + 1) + 1 && [\text{by algebra}] \end{aligned}$$

Let $t = 2k^2 - k + 1$. Then *t* is an integer as $\mathbb{Z}$ is closed under addition, multiplication and subtraction.

Hence $n^2 - n + 3 = 2t + 1$, where *t* is an integer, and thus $n^2 - n + 3$ is odd by definition of odd integer.

Step 3 of 3

Case 2:

Let *n* be an odd integer. Then, $n = 2k + 1$ for some integer *k*.

$$\begin{aligned} n^2 - n + 3 &= (2k+1)^2 - (2k+1) + 3 && [\text{by substitution}] \\ &= 4k^2 + 4k + 1 - 2k - 1 + 3 \\ &= 4k^2 + 2k + 2 + 1 \\ &= 2(2k^2 + k + 1) + 1 && [\text{by algebra}] \end{aligned}$$

Let $t = 2k^2 + k + 1$. Then *t* is an integer as $\mathbb{Z}$ is closed under addition, multiplication and subtraction.

Hence $n^2 - n + 3 = 2t + 1$, where *t* is an integer, and thus $n^2 - n + 3$ is odd by definition of odd integer.

In both possible cases, $n^2 - n + 3$ is odd.

Chapter 4.5, Problem 18E

Problem

a. Prove that the product of any two consecutive integers is even.

b. The result of part (a) suggests that the second approach in the discussion of Example 4.5.7 might be possible after all. Write a new proof of Theorem 4.5.3 based on this observation.

Step-by-step solution

Step 1 of 5

a.

Consider the given statement.

The product of any two consecutive integers is even.

The main objective of this given problem is to prove the given statement.

Step 2 of 5

Proof:

Let *n* be the smallest integer.

Consider two cases *n* as an even number and *n* as an odd number.

Case 1:

Let *n* be an even integer. Then, $n = 2k$ for some integer *k*.

$$\begin{aligned} n(n+1) &= (2k)(2k+1) && [\text{by substitution}] \\ &= 4k^2 + 2k \\ &= 2(2k^2 + k) && [\text{by algebra}] \end{aligned}$$

Let $t = 2k^2 + k$. Then *t* is an integer as $\mathbb{Z}$ is closed under addition, multiplication and subtraction.

Hence $n(n+1) = 2t$, where *t* is an integer, and thus $n(n+1)$ is even by definition of even integer.

Step 3 of 5

Case 2:

Let *n* be an odd integer. Then, $n = 2k+1$ for some integer *k*.

$$\begin{aligned} n(n+1) &= (2k+1)(2k+1+1) && [\text{by substitution}] \\ &= (2k+1)(2k+2) \\ &= 2(2k+1)(k+1) && [\text{by algebra}] \end{aligned}$$

Let $t = (2k+1)(k+1)$. Then *t* is an integer as $\mathbb{Z}$ is closed under addition, multiplication and subtraction.

Hence $n(n+1) = 2t$, where *t* is an integer, and thus $n(n+1)$ is even by definition of even integer.

In both possible cases, $n^2 - n + 3$ is odd.

Step 4 of 5

b.

Consider the given statement.

The square of any odd integer has the form $8m+1$ for some integer *m*.

The main objective of this given problem is to prove the given statement.

Step 5 of 5

Proof:

Let *n* be any odd integer.

Then, $n = 2k+1$ for some integer *k*.

$$\begin{aligned} n^2 &= (2k+1)^2 && [\text{by substitution}] \\ &= 4k^2 + 4k + 1 \\ &= 4k(k+1) + 1 && [\text{by algebra}] \end{aligned}$$

From the result of part (a) the product $k(k+1)$ is even, so $k(k+1) = 2s$, for some integer *s*.

Hence $n^2 = 4(2m) + 1 = 8m + 1$, where *m* is an integer, and thus $n^2 = 8m + 1$.

Chapter 4.5, Problem 19E

Problem

Prove directly from the definitions that for all integers *m* and *n*, if *m* and *n* have the same parity, then 5*m* + 7*n* is even. Divide into two cases: *m* and *n* are both even and *m* and *n* are both odd.

Step-by-step solution

Step 1 of 3

Consider the given statement.

For all integers *m* and *n*, if *m* and *n* have the same parity, then $5m+7n$ is even.

The main objective of this given problem is to prove the given statement.

Step 2 of 3

Proof:

Let *m* and *n* are any integers with same parity.

Consider two cases both *m* and *n* are even numbers and both *m* and *n* are odd numbers.

Case 1:

Let *m* and *n* are even integers. Then, $m=2k,\ n=2l$ for some integers *k* and *l*.

$$\begin{aligned} 5m+7n &= 5(2k)+7(2l) && [\text{by substitution}] \\ &= 10k+14l \\ &= 2(5k+7l) && [\text{by algebra}] \end{aligned}$$

Let $t=5k+7l$. Then *t* is an integer as $\mathbb{Z}$ is closed under addition and multiplication.

Hence $5m+7n=2t$, where *t* is an integer, and thus $5m+7n$ is even by definition of even integer.

Step 3 of 3

Case 2:

Let *m* and *n* are odd integers. Then, $m=2k+1,\ n=2l+1$ for some integers *k* and *l*.

$$\begin{aligned} 5m+7n &= 5(2k+1)+7(2l+1) && [\text{by substitution}] \\ &= 10k+5+14l+7 \\ &= 10k+14l+12 \\ &= 2(5k+7l+6) && [\text{by algebra}] \end{aligned}$$

Let $t=5k+7l+6$. Then *t* is an integer as $\mathbb{Z}$ is closed under addition and multiplication.

Hence $5m+7n=2t$, where *t* is an integer, and thus $5m+7n$ is even by definition of even integer.

In both possible cases, $5m+7n$ is even.

Chapter 4.5, Problem 20E

Problem

Suppose *a* is an integer. If *a mod* 7 = 4, what is 5*a mod* 7? In other words, if division of *a* by 7 gives a remainder of 4, what is the remainder when 5*a* is divided by 7?

Step-by-step solution

Step 1 of 3

3434-4.4-20E SA: 1906

SR: 9863

Step 2 of 3

Given that a is an integer and $a \bmod 7 = 4$ i.e. division of a by 7 gives a remainder of 4. Therefore, there exists an integer r such that

$a = 7r + 4$.

This implies

$$\begin{aligned} 5a &= 5(7r+4) \\ &= 35r + 20 \\ &= 7(5r+2) + 6 \end{aligned}$$

Step 3 of 3

As r is an integer, $(5r+2)$ is also an integer. If we divide $5a$ by 7, the reminder will be 6. Because r is an integer, $(5r+2)$ is also an integer, and so

$5a = 7.(an \text{ integer}) + 6$. Thus, because $0 \le 6 < 7$, the remainder obtained when $5a$ is divided by 7 is 6. Hence

$$\boxed{5a \bmod 7 = 6}$$

Chapter 4.5, Problem 21E

Problem

Suppose *b* is an integer. If *b mod* 12 = 5, what is 8*b mod* 12? In other words, if division of *b* by 12 gives a remainder of 5, what is the remainder when 8*b* is divided by 12?

Step-by-step solution

Step 1 of 2

The objective is to find the remainder when $8b$ is divided by 12.

Step 2 of 2

Consider b is an integer and $b \bmod 12 = 5$,

That is division of b by 12 gives a remainder 5.

Therefore, there exist an integer q such that,

$b = 12q + 5$

Multiply both sides by 8.

$$\begin{aligned} 8b &= 8(12q+5) \\ &= 8q(12)+40 \\ &= 8q(12)+36+4 \\ &= 12(8q+3)+4 \end{aligned}$$

As q is an integer, then $8q+3$ is also an integer.

Thus, if a division of $8b$ by 12 give a remainder of 4, then $8b \bmod 12 = 4$.

Hence, $8b \bmod 12 = \boxed{4}$.

Chapter 4.5, Problem 22E

Problem

Suppose *c* is an integer. If *c mod* 15 = 3, what is 10*c mod* 15? In other words, if division of *c* by 15 gives a remainder of 3, what is the remainder when 10*c* is divided by 15?

Step-by-step solution

Step 1 of 2

The objective is to determine the value of $10c \bmod 15$, when $c \bmod 15 = 3$, and c is any constant.

When c is divided by 15, the remainder is 3.By definition of modular, there exists an integer k such that $c = 15k + 3$.

Multiply both sides by 10.

$$\begin{aligned} 10c &= 10(15k+3) \\ &= 10 \cdot 15k + 30 \\ &= 15(10k+2) \\ &= 15(10k+2) + 0 \end{aligned}$$

Step 2 of 2

As $10k+2$ is an integer, so $10c$ is divisible by 15.

That is, $10c \bmod 15 = 0$.

Therefore, the value of $10c \bmod 15$ is $\boxed{0}$.

Chapter 4.5, Problem 23E

Problem

Prove that for all integers *n*, if *n mod* 5 = 3 then *n*2 *mod* 5 = 4.

Step-by-step solution

Step 1 of 4

Consider the below statement,

"For all integers n, if $n \bmod 5 = 3$ then $n^2 \bmod 5 = 4$".

The objective is to prove the above statement.

Step 2 of 4

Let *n* be an integer for which $n \bmod 5 = 3$.

Now, by the quotient-remainder theorem, there exists an integer m such that:

$n = 5m + 3$ ..... (1)

Step 3 of 4

Square equation (1) on both sides to get,

$$\begin{aligned} n^2 &= (5m+3)^2 \\ &= (5m)^2 + 2(5m)(3) + (3)^2 \\ &= 25m^2 + 30m + 9 \\ &= 25m^2 + 30m + 5 + 4 \end{aligned}$$

That is,

$$n^2 = 5\left(5m^2 + 6m + 1\right) + 4$$

Step 4 of 4

As the square of an integer is also an integer. So m^2 is an integer.

As well as the product and sum of integers is also an integer. So $5m^2 + 6m + 1$ is an integer.

Since n^2 can be written as 5 times of some integer $5m^2 + 6m + 1$ increased by 4.

Therefore, by the quotient remainder theorem n^2 divides $5\left(5m^2 + 6m + 1\right)$. But, if $5\left(5m^2 + 6m + 1\right) + 4$ is divided by n^2 then remainder be 4.

Thus,

$n^2 \bmod 5 = 4$

Hence, proved.

Chapter 4.5, Problem 24E

Problem

Prove that for all integers *m* and *n*, if *m mod* 5 = 2 and *n mod* 5 = 1 then *mn mod* 5 = 2.

Step-by-step solution

Step 1 of 2

Consider the given statement.

For all integers *m* and *n*, if $m \bmod 5 = 2$ and $n \bmod 5 = 1$ then $mn \bmod 5 = 2$.

The main objective of this given problem is to prove the given statement.

Step 2 of 2

Proof:

Let *m* and *n* are any integers such that $m \bmod 5 = 2$ and $n \bmod 5 = 1$.

The expression $m \bmod 5 = 2$ implies that 2 is remainder when *m* is divided by 5. The expression $n \bmod 5 = 1$ implies that 1 is remainder when *n* is divided by 5.

Thus $m = 5a + 2$ and $n = 5b + 1$ for some integers a and b.

$$\begin{aligned} mn &= (5a+2)(5b+1) && [\text{by substitution}] \\ &= 25ab + 5a + 10b + 2 \\ &= 5(5ab + a + 2b) + 2 && [\text{by algebra}] \end{aligned}$$

Let $t = 5ab + a + 2b$. Then *t* is an integer as $\mathbb{Z}$ is closed under addition and multiplication.

Hence $mn = 5t + 2$, where *t* is an integer, and thus 2 is the remainder when mn is divided by 5. That is $mn \bmod 5 = 2$.

Chapter 4.5, Problem 25E

Problem

Prove that for all integers *a* and *b*, if *a mod* 7 = 5 and *b mod* 7 = 6 then *ab mod* 7 = 2.

Step-by-step solution

Step 1 of 4

3434-4.4-25E SA: 1906

SR: 9863

Step 2 of 4

Let a be an integer such that $a \bmod 7 = 5$ i.e. division of a by 7 gives a remainder of 5. Therefore, there exists an integer r such that

$a = 7r + 5$.

Step 3 of 4

Let b be an integer such that $b \bmod 7 = 6$ i.e. division of b by 7 gives a remainder of 6. Therefore, there exists an integer q such that

$b = 7q + 6$.

Step 4 of 4

This implies

$$ab = (7r+5)(7q+6)$$
$$= 49q\,r + 42\,r + 35q + 30$$
$$= 7(7qr + 6r + 5q + 4) + 2$$

As q, r both are integers, $(7qr + 6r + 5q + 4)$ is also an integer. If we divide ab by 7, the reminder will be 2. Hence

$$\boxed{ab \bmod 7 = 2}$$

Chapter 4.5, Problem 26E

Problem

Prove that a necessary and sufficient condition for a nonnegative integer *n* to be divisible by a positive integer *d* is that *n mod d* = 0.

Step-by-step solution

Step 1 of 2

We know that for any integer n and positive integer $d > 0$,

$$n \bmod d = r$$
$$\Leftrightarrow n = dq + r$$

Where q, r are integers and $0 \le r < d$

Suppose $n \bmod d = 0$.

Then there exist an integer q such that $n = dq + 0$

$n = dq$

d is a factor of n

Therefore, n is divisible by d

Step 2 of 2

Conversely, suppose that n is divisible by d. Then there exist an integer q such that $n = dq$

Therefore

$$n = dq + 0$$
$$n \bmod d = 0$$

Therefore, a necessary and sufficient condition for a nonnegative integer n to be divisible by a positive integer d is that $n \bmod d = 0$

Chapter 4.5, Problem 27E

Problem

Use the quotient-remainder theorem with divisor equal to 2 to prove that the square of any integer can be written in one of the two forms $4k$ or $4k + 1$ for some integer k.

Step-by-step solution

Step 1 of 3

Consider the given statement.

The square of any integer can be written in one of the two forms $4k$ or $4k+1$ for some integer k.

The main objective of this given problem is to prove the given statement.

Step 2 of 3

Proof:

Let n be any integer.

Apply quotient-remainder theorem with $d=2$ to get $n=2a+0$ and $n=2a+1$ for some $a \in \mathbb{Z}$.

Case 1:

$n=2a$ implies n is an even integer.

$$\begin{aligned} n^2 &= (2a)^2 && [\text{by substitution}] \\ &= 4a^2 && [\text{by algebra}] \end{aligned}$$

Let $k=4a^2$. Then t is an integer as $\mathbb{Z}$ is closed under addition and multiplication.

Thus, $n^2=4k$ for some integer k.

Comments (1)

let k = a^2

Step 3 of 3

Case 2:

$n=2a+1$ implies n is an odd integer.

$$\begin{aligned} n^2 &= (2a+1)^2 && [\text{by substitution}] \\ &= 4a^2+4a+1 \\ &= 4(a^2+a)+1 && [\text{by algebra}] \end{aligned}$$

Let $k=a^2+a$. Then t is an integer as $\mathbb{Z}$ is closed under addition and multiplication.

Thus $n^2=4k+1$ for some integer k.

In both possible cases, $n^2=4k \text{ or } 4k+1$ for some integer k.

Chapter 4.5, Problem 28E

Problem

a. Prove: Given any set of three consecutive integers, one of the integers is a multiple of 3.

b. Use the result of part (a) to prove that any product of three consecutive integers is a multiple of 3.

Step-by-step solution

Step 1 of 6

a.

Consider the given statement.

Given any set of three consecutive integers, one of the integers is a multiple of 3.

The main objective of this given problem is to prove the given statement.

Step 2 of 6

Proof: Let $n, n+1$ and $n+2$ be any three consecutive integers.

Apply the quotient remainder theorem with divisor equal to 3, $n=3k, n=3k+1$ or $n=3k+2$ for some integer *k*.

Case 1:

$n=3k$ for some integer *k*.

$n=3k$

Thus, *n* is a multiple of 3.

Step 3 of 6

Case 2:

$n=3k+1$ for some integer *k*.

$$\begin{aligned} n+2 &= 3k+1+2 && [\text{by substitution}] \\ &= 3k+3 \\ &= 3(k+1) && [\text{by algebra}] \end{aligned}$$

Let $t=k+1$. Then *t* is an integer as $\mathbb{Z}$ is closed under addition.

Thus $n+2=3t$ for some integer *t*. Hence $n+2$ is a multiple of 3.

Step 4 of 6

Case 3:

$n=3k+2$ for some integer *k*.

$$\begin{aligned} n+1 &= 3k+2+1 && [\text{by substitution}] \\ &= 3k+3 \\ &= 3(k+1) && [\text{by algebra}] \end{aligned}$$

Let $t=k+1$. Then *t* is an integer as $\mathbb{Z}$ is closed under addition.

Thus $n+1=3t$ for some integer *t*. Hence $n+1$ is a multiple of 3.

In all possible cases, one of the 3 consecutive integers is a multiple of 3.

Step 5 of 6

b.

Consider the given statement.

Any product of 3 consecutive integers is a multiple of 3.

The main objective of this given problem is to prove the given statement.

Step 6 of 6

Proof:

Let *P* be the product of any 3 consecutive integers. From part (a) one of the factors of *P* is a multiple of 3.

Let $n, n+1$ and $n+2$ be any 3 consecutive integers and suppose *n* is a multiple of 3. Then $n=3k$ for some integer *k*.

$$\begin{aligned} P &= n(n+1)(n+2) \\ &= 3k(n+1)(n+2) && [\text{by substitution}] \\ &= 3[k(n+1)(n+2)] && [\text{by algebra}] \end{aligned}$$

Let $t=k(n+1)(n+2)$. Then *t* is an integer as $\mathbb{Z}$ is closed under addition and multiplication.

Thus $P=3t$ for some integer *t*. Hence *P* is a multiple of 3.

Chapter 4.5, Problem 29E

Problem

a. Use the quotient-remainder theorem with divisor equal to 3 to prove that the square of any integer has the form 3*k* or 3*k* + 1 for some integer *k*.

b. Use the *mod* notation to rewrite the result of part (a).

Step-by-step solution

Step 1 of 6

a.

Consider the given statement.

The square of any integer has the form $3k$ or $3k+1$ for some integer *k*.

The main objective of this given problem is to prove the given statement.

Step 2 of 6

Proof:

Let *n* be any integer.

By the quotient remainder theorem with divisor equal to 3, $n=3k, n=3k+1$ or $n=3k+2$ for some integer *k*.

Case 1:

$n=3k$ for some integer *k*.

$$\begin{aligned} n^2 &= (3k)^2 && [\text{by substitution}] \\ &= 9k^2 \\ &= 3(3k^2) && [\text{by algebra}] \end{aligned}$$

Let $t=3k^2$. Then *t* is an integer as $\mathbb{Z}$ is closed under multiplication.

Thus $n^2=3t$ for some integer *t*. Hence n^2 is a multiple of 3.

Step 3 of 6

Case 2:

$n=3k+1$ for some integer *k*.

$$\begin{aligned} n^2 &= (3k+1)^2 && [\text{by substitution}] \\ &= 9k^2+6k+1 \\ &= 3(k^2+2k)+1 && [\text{by algebra}] \end{aligned}$$

Let $t=k^2+2k$. Then *t* is an integer as $\mathbb{Z}$ is closed under addition and multiplication.

Thus $n^2=3t+1$ for some integer *t*.

Comments (1)

in the algebra step, should it be 3(3k2 + 2k) + 1 ? then let t=3k2 +2k?

Step 4 of 6

Case 3:

$n=3k+2$ for some integer *k*.

$$\begin{aligned} n^2 &= (3k+2)^2 && [\text{by substitution}] \\ &= 9k^2+12k+4 \\ &= 9k^2+12k+3+1 \\ &= 3(3k^2+4k+1)+1 && [\text{by algebra}] \end{aligned}$$

Let $t=3k^2+4k+1$. Then *t* is an integer as $\mathbb{Z}$ is closed under addition and multiplication.

Thus $n^2=3t+1$ for some integer *t*.

In all 3 possible cases, $n^2=3k$ or $n^2=3k+1$ for some integer *k*.

Step 5 of 6

b.

The objective is to rewrite the result of part (a) using *mod*.

Step 6 of 6

The result of part (a) is "The square of any integer has the form $3k$ or $3k+1$ for some integer *k*."

The result can be rewritten as follows.

For any integer *n*, $n^2 \bmod 3 = 0$ or $n^2 \bmod 3 = 1$.

Chapter 4.5, Problem 30E

Problem

a. Use the quotient-remainder theorem with divisor equal to 3 to prove that the product of any two consecutive integers has the form 3*k* or 3*k* + 2 for some integer *k*.

b. Use the *mod* notation to rewrite the result of part (a).

Step-by-step solution

Step 1 of 5

a.

Consider the given statement.

The product of any two consecutive integers has the form $3k$ or $3k+2$ for some integer *k*.

The main objective of this given problem is to prove the given statement.

Step 2 of 5

Proof:

Let *n* be any integer.

By the quotient remainder theorem with divisor equal to 3, $n=3k, n=3k+1$ or $n=3k+2$ for some integer *k*.

Case 1:

$n=3k$ for some integer *k*.

$$\begin{aligned} n(n+1) &= (3k)(3k+1) \quad [\text{by substitution}] \\ &= 9k^2+3k \\ &= 3(3k^2+k) \quad [\text{by algebra}] \end{aligned}$$

Let $t=3k^2+k$. Then *t* is an integer as $\mathbb{Z}$ is closed under addition and multiplication.

Thus $n(n+1)=3t$ for some integer *t*. Hence $n(n+1)$ is a multiple of 3.

Step 3 of 5

Case 2:

$n=3k+1$ for some integer *k*.

$$\begin{aligned} n(n+1) &= (3k+1)(3k+2) \quad [\text{by substitution}] \\ &= 9k^2+6k+3k+2 \\ &= 3(3k^2+2k+k)+2 \quad [\text{by algebra}] \end{aligned}$$

Let $t=3k^2+2k+k$. Then *t* is an integer as $\mathbb{Z}$ is closed under addition and multiplication.

Thus $n^2=3t+2$ for some integer *t*.

Step 4 of 5

Case 3:

$n=3k+2$ for some integer *k*.

$$\begin{aligned} n(n+1) &= (3k+2)(3k+3) \quad [\text{by substitution}] \\ &= 9k^2+9k+6k+6 \\ &= 9k^2+15k+6 \\ &= 3(3k^2+5k+2) \quad [\text{by algebra}] \end{aligned}$$

Let $t=3k^2+5k+2$. Then *t* is an integer as $\mathbb{Z}$ is closed under addition and multiplication.

Thus $n^2=3t$ for some integer *t*.

In all 3 possible cases, $n(n+1)=3k$ or $n(n+1)=3k+2$ for some integer *k*.

Step 5 of 5

b.

The objective is to rewrite the result of part (a) using *mod*.

The result of part (a) is "The product of any two consecutive integers has the form $3k$ or $3k+2$ for some integer *k*."

The result can be rewritten as follows.

For any consecutive integers *m* and *n*, $mn \bmod 3=0$ or $mn \bmod 3=2$.

Chapter 4.5, Problem 31E

Problem

You may use the properties listed in Example.

Example

Deriving Additional Results about Even and Odd Integers

Suppose that you have already proved the following properties of even and odd integers:

1. The sum, product, and difference of any two even integers are even.

2. The sum and difference of any two odd integers are even.

3. The product of any two odd integers is odd.

4. The product of any even integer and any odd integer is even.

5. The sum of any odd integer and any even integer is odd.

6. The difference of any odd integer minus any even integer is odd.

7. The difference of any even integer minus any odd integer is odd.

Use the properties listed above to prove that if *a* is any even integer and *b* is any odd integer, then $\frac{a^2+b^2+1}{2}$ is an integer.

Solution

Suppose *a* is any even integer and *b* is any odd integer. By property 3, *b*2 is odd, and by property 1, *a*2 is even. Then by property 5, *a*2 + *b*2 is odd, and because 1 is also odd, the sum (*a*2 + *b*2)+ 1 = *a*2 + *b*2 + 1 is even by property 2. Hence, by definition of even, there exists an integer *k* such that *a*2 + *b*2 + 1 = 2*k*. Dividing both sides by 2 gives $\frac{a^2+b^2+1}{2}=k$, which is an integer. Thus $\frac{a^2+b^2+1}{2}$ is an integer *[as was to be shown]*.

Exercise

a. Prove that for all integers *m* and *n*, *m* + *n* and *m* − *n* are either both odd or both even.

b. Find all solutions to the equation *m*2 − *n*2 = 56 for which both *m* and *n* are positive integers.

c. Find all solutions to the equation *m*2 − *n*2 = 88 for which both *m* and *n* are positive integers.

Step-by-step solution

Step 1 of 9

(a)

Proof:

Let *m* and *n* be integers. Where *m* and *n* are both either even or odd.

Case 1: When *m* and *n* are both even.

By the property of even and odd, the sum of two even integers is also even.

Thus, $m+n$ is even.

And, the difference of two even integers is also even.

Thus, $m-n$ is even.

Hence, the sum and difference are both even.

Step 2 of 9

Case 2: When *m* is even and *n* is odd.

By the properties of even and odd, the sum of an even integer and an odd integer is odd.

Thus, $m+n$ is odd.

And, the difference of an even integer and an odd integer is odd.

Thus, $m-n$ is odd.

Hence, the sum and difference are both odd.

Step 3 of 9

Case 3: When *m* is odd and *n* is even.

By the properties of even and odd, the sum of an even integer and an odd integer is odd.

Thus, $m+n$ is odd.

And, the difference of an even integer and an odd integer is odd.

Thus, $m-n$ is odd.

Hence, the sum and difference are both odd.

Step 4 of 9

Case 4: When *m* and *n* are both odd.

By the property of even and odd, the sum of two odd integers is even.

Thus, $m+n$ is even.

And, the difference of two odd integers is even.

Thus, $m-n$ is even.

Hence, the sum and difference are both even.

Since, the sum $m+n$ and the difference $m-n$ are either both odd or both even in each of four cases.

Hence proved the desire result.

Step 5 of 9

(b)

Let *m* and *n* are positive integers.

$m^2-n^2=56$

Since, $m^2-n^2=(m-n)(m+n)$. Thus, 56 is the product of $m+n$ and $m-n$.

And, by the part (a), $m+n$ and $m-n$ are either both odd or both even.

Now the factorization of 56 is $2^3.7$.

Since both terms should be even or odd. Thus, the possible factors are $(2,28),(4,14)$, and $(8,7)$.

But for the factor $(8,7)$, $m+n$ and $m-n$ are not both odd or not both even. Thus, it will not be considered here.

Step 6 of 9

When $m+n=28$ and $m-n=2$, then

$2m=30$

$\Rightarrow m=15$

And, for $m=15$

$n=28-m$

$=28-15$

$=13$

When $m+n=14$ and $m-n=4$, then

$2m=18$

$\Rightarrow m=9$

And, for $m=9$

$n=14-m$

$=14-9$

$=5$

Hence, the solutions are $m=15$ and $n=13$, or $m=9$ and $n=5$.

Step 7 of 9

(c)

Let *m* and *n* are positive integers.

$m^2-n^2=88$

Since, $m^2-n^2=(m-n)(m+n)$. Thus, 88 is the product of $m+n$ and $m-n$.

And, by the part (a), $m+n$ and $m-n$ are either both odd or both even.

Now the factorization of 88 is $2^3.11$.

Since both terms should be even or odd. Thus, the possible factors are $(2,44),(4,22)$, and $(8,11)$.

But for the factor $(8,11)$, $m+n$ and $m-n$ are not both odd or not both even. Thus, it will not be considered here.

Step 8 of 9

When $m+n=44$ and $m-n=2$, then

$2m=46$

$\Rightarrow m=23$

And, for $m=23$

$n=44-m$

$=44-23$

$=21$

When $m+n=22$ and $m-n=4$, then

$2m=26$

Step 9 of 9

$\Rightarrow m=13$

And, for $m=13$

$n=22-m$

$=22-13$

$=9$

Hence, the solutions are $m=23$ and $n=21$, or $m=13$ and $n=9$.

Chapter 4.5, Problem 32E

Problem

You may use the properties listed in Example.

Example

Deriving Additional Results about Even and Odd Integers

Suppose that you have already proved the following properties of even and odd integers:

1. The sum, product, and difference of any two even integers are even.

2. The sum and difference of any two odd integers are even.

3. The product of any two odd integers is odd.

4. The product of any even integer and any odd integer is even.

5. The sum of any odd integer and any even integer is odd.

6. The difference of any odd integer minus any even integer is odd.

7. The difference of any even integer minus any odd integer is odd.

Use the properties listed above to prove that if *a* is any even integer and *b* is any odd integer, then $\frac{a^2+b^2+1}{2}$ is an integer.

Solution

Suppose *a* is any even integer and *b* is any odd integer. By property 3, *b*2 is odd, and by property 1, *a*2 is even. Then by property 5, *a*2 + *b*2 is odd, and because 1 is also odd, the sum (*a*2 + *b*2)+ 1 = *a*2 + *b*2 + 1 is even by property 2. Hence, by definition of even, there exists an integer *k* such that *a*2 + *b*2 + 1 = 2*k*. Dividing both sides by 2 gives $\frac{a^2+b^2+1}{2}=k$, which is an integer. Thus $\frac{a^2+b^2+1}{2}$ is an integer *[as was to be shown]*.

Exercise

Given any integers *a, b,* and *c,* if *a* − *b* is even and *b* − *c* is even, what can you say about the parity of 2*a* − (*b* + c)? Prove your answer.

Step-by-step solution

Step 1 of 1

The objective is to find the parity of $2a-(b+c)$, with $a-b$ and $b-c$ are even integers for integers $a, b,$ and c.

Rewrite $2a-(b+c)$ as follows:

$$\begin{aligned}2a-(b+c)&=(a+a)-(b+c)\\&=(a-b)+(a-c)\end{aligned}$$

As $a-b$ and $b-c$ are even, and sum of two even integers is even, and then $(a-b)+(b-c)=a-c$ is also even.

Thus, by applying the rule of sum of even integers is even, conclude that $(a-b)+(a-c)=2a-(b+c)$ is even.

Chapter 4.5, Problem 33E

Problem

You may use the properties listed in Example.

Example

Deriving Additional Results about Even and Odd Integers

Suppose that you have already proved the following properties of even and odd integers:

1. The sum, product, and difference of any two even integers are even.

2. The sum and difference of any two odd integers are even.

3. The product of any two odd integers is odd.

4. The product of any even integer and any odd integer is even.

5. The sum of any odd integer and any even integer is odd.

6. The difference of any odd integer minus any even integer is odd.

7. The difference of any even integer minus any odd integer is odd.

Use the properties listed above to prove that if *a* is any even integer and *b* is any odd integer, then $\frac{a^2+b^2+1}{2}$ is an integer.

Solution

Suppose *a* is any even integer and *b* is any odd integer. By property 3, *b*2 is odd, and by property 1, *a*2 is even. Then by property 5, *a*2 + *b*2 is odd, and because 1 is also odd, the sum (*a*2 + *b*2)+ 1 = *a*2 + *b*2 + 1 is even by property 2. Hence, by definition of even, there exists an integer *k* such that *a*2 + *b*2 + 1 = 2*k*. Dividing both sides by 2 gives $\frac{a^2+b^2+1}{2} = k$, which is an integer. Thus $\frac{a^2+b^2+1}{2}$ is an integer *[as was to be shown]*.

Exercise

Given any integers *a, b,* and c, if *a* − *b* is odd and *b* − *c* is even, what can you say about the parity of *a* − *c*? Prove your answer.

Step-by-step solution

Step 1 of 1

The objective is to find the parity of $a-c$, with $a-b$ is odd and $b-c$ is an even integer for the integers $a, b,$ and c.

Consider,

$$(a-b)+(b-c)=a-c$$

Use the rule, the sum of an odd integer and an even integer is odd.

That is, $(a-b)+(b-c)=a-c$ is odd.

Therefore, $(a-b)+(b-c)=a-c$ is odd.

Chapter 4.5, Problem 34E

Problem

Given any integer n, if $n > 3$, could n, $n + 2$, and $n + 4$ all be prime? Prove or give a counterexample.

Step-by-step solution

Step 1 of 3

The objective is to find whether $n, n+2,$ and $n+4$ all are prime if $n > 3.$

Use Quotient-Remainder Theorem for $d = 3.$

By division algorithm, there are integers q, r with $r \in \{0,1,2\}$ such that $n = 3q + r.$

If $r = 0,$ then $n = 3q.$

As $n > 3,$ this contradicts n being prime.

If $r = 1,$ then $n = 3q + 1.$

Add 2 to each side of the equation.

$$\begin{aligned} n+2 &= (3q+1)+2 \\ &= 3(q+1) \end{aligned}$$

Thus, $n+2$ is divisible by 3.

Step 2 of 3

If $r = 2,$ then $n = 3q + 2.$

Add 4 to each side of the equation.

$$\begin{aligned} n+4 &= (3q+2)+4 \\ &= 3(q+2) \end{aligned}$$

Thus, $n+4$ is divisible by 3.

Step 3 of 3

For $n = 4$ and $q = 1,$ the number n is not prime.

For $n = 5$ and $q = 1,$ the number $n+4$ is not prime.

Therefore, in all cases one of three numbers $n, n+1,$ and $n+2$ is a multiple of 3.

Hence, the statement is **false.**

Chapter 4.5, Problem 35E

Problem

Prove each of the statement.

Exercise

The fourth power of any integer has the form 8*m* or 8*m* + 1 for some integer *m*.

Step-by-step solution

Step 1 of 3

For any integer n, n is even or odd.

Therefore, n can be represent as $n = 2k$ or $n = 2k+1$ for some integer k

Case-1: $n = 2k$

$$\begin{aligned} n^4 &= (2k)^4 \\ &= 8(2k^4) \\ &= 8m \end{aligned}$$

Where $m = 2k^4$ is an integer

Step 2 of 3

Case-2: $n = 2k+1$

$$\begin{aligned} n^2 &= (2k+1)^2 \\ &= 4k^2 + 4k + 1 \\ &= 4(k^2 + k) + 1 \end{aligned}$$

Step 3 of 3

On solving

$$\begin{aligned} n^4 &= \left[4(k^2+k)+1\right]^2 \\ &= 16(k^2+k)^2 + 8(k^2+k) + 1 \\ &= 8\left[2(k^2+k)^2 + (k^2+k)\right] + 1 \\ &= 8m + 1 \end{aligned}$$

Where $m = 2(k^2+k)^2 + (k^2+k)$ is an integer

Therefore, for any integer n, n^4 has the form $8m$ or $8m+1$ for some integer m

Chapter 4.5, Problem 36E

Problem

Prove each of the statement.

Exercise

The product of any four consecutive integers is divisible by 8.

Step-by-step solution

Step 1 of 5

We are given any integer n

Apply the quotient remainder theorem to n with $d = 4$

This implies that there exists an integer quotient q, and a remainder r, such that $a = bq + r$ and $0 \le r < 4$.

However, the only non-negative remainders r that are less than 4, are 0, 1, 2, and 3

Thus, $n = 4q$ or $4q+1$ or $n = 4q+2$ or $n = 4q+3$ for some integer q

Step 2 of 5

Case (1)

$N = 4q$

In this case, the product of four consecutive integers

$= 4q\ (4q+1)\ (4q+2)\ (4q+3)$

$= 8q(4q+1)(2q+1)(4q+3)$

$= 8k$, for some integer $k = (4q+1)(2q+1)(4q+3)$

So from the definition of divisible, the product of four consecutive integers is divisible by 8.

Step 3 of 5

Case (2)

$N = 4q+1$

In this case, the product of four consecutive integers

$= (4q+1)\ (4q+2)\ (4q+3)\ (4q+4)$

$= 8(4q+1)\ (2q+1)\ (4q+3)\ (q+1)$

$= 8k$, for some integer $k = (4q+1)\ (2q+1)\ (4q+3)\ (q+1)$

So from the definition of divisible, the product of four consecutive integers is divisible by 8.

Step 4 of 5

Case (3)

$N = 4q+2$

In this case, the product of four consecutive integers

$= (4q+2)\ (4q+3)\ (4q+4)\ (4q+5)$

$= 8\ (2q+1)\ (4q+3)\ (q+1)\ (4q+5)$

$= 8k$, for some integer $k = (2q+1)\ (4q+3)\ (q+1)\ (4q+5)$

So from the definition of divisible, the product of four consecutive integers is divisible by 8.

Step 5 of 5

Case (4)

$N = 4q+3$

In this case, the product of four consecutive integers

$= (4q+3)\ (4q+4)\ (4q+5)(4q+6)$

$= 8(4q+3)\ (q+1)\ (4q+5)(2q+3)$

$= 8k$, for some integer $k = (4q+3)\ (q+1)\ (4q+5)\ (2q+3)$

So from the definition of divisible, the product of four consecutive integers is divisible by 8.

Therefore, the product of any four consecutive integers is divisible by 8

Chapter 4.5, Problem 38E

Problem

Prove each of the statement.

Exercise

For all integers *m*, *m*2 = 5*k*, or *m*2 = 5*k* + 1, or *m*2 = 5*k* + 4 for some integer *k*.

Step-by-step solution

Step 1 of 3

Proof:

Suppose m is any integer.

Quotients-remainder theorem says that for an any integer n and positive integer d there exist unique integers k and r such that,

$$m = dk + r \qquad [0 \le r < d]$$

So, the positive integer is given as $d = 5$.

This implies that there exist integers k and r such that

$m = 5k + r$ and $0 \le r < 5$.

The nonnegative remainder r that are less than 5 are $0, 1, 2, 3$ and 4.

But if the integer is squared then the nonnegative integer's value is also squared.

So, the new nonnegative integers r that are less than 5 are $0, 1,$ and 4.

So, substitute the remainder value in the above equation,

For $r = 0$

The value of the integer is,

$$\begin{aligned} m^2 &= 5k + 0 \\ &= 5k \end{aligned}$$

Step 2 of 3

For $r = 1$

The value of the integer is,

$$m^2 = 5k + 1$$

Step 3 of 3

For $r = 4$

The value of the integer is,

$$m^2 = 5k + 4$$

Therefore, $\boxed{m^2 = 5k + 0 = 5k \text{ or } m^2 = 5k + 1 \text{ or } m^2 = 5k + 4}$ for some integers k.

So, the statement is proved.

Chapter 4.5, Problem 39E

Problem

Prove each of the statement.

Exercise

Every prime number except 2 and 3 has the form 6*q* + 1 or 6*q* + 5 for some integer *q*.

Step-by-step solution

Step 1 of 4

The objective is to prove that every prime number except 2 and 3 has the form $6q+1$ or $6q+5$ for some integer q.

Use Quotient-Remainder theorem, to prove the result.

For any integer m and positive integer d, there exist unique integers q and r such that $m=qd+r$ and $0 \le r < d$.

Take $d=6$ and $m \ne 2,3$ as a prime.

Then $m=6q+r$ and $0 \le r < 6$.

For $r=0$,

$$m=6q$$
$$6 \mid m$$

But m is a prime

Thus, 6 cannot be a factor of m.

Therefore, $r \ne 0$.

Step 2 of 4

For $r=2$,

$$\begin{aligned} m &= 6q+2 \\ &= 2(3q+1) \end{aligned}$$
$$2 \mid m$$

Thus, 2 is a factor of m and m is a prime.

That is, $m=2$ a contradiction to $m \ne 2$.

Therefore, $r \ne 2$.

Step 3 of 4

For $r=3$,

$$\begin{aligned} m &= 6q+3 \\ &= 3(2q+1) \end{aligned}$$
$$3 \mid m$$

Thus, 3 is a factor of m and m is a prime.

That is, $m=3$ a contradiction to $m \ne 3$.

Therefore, $r \ne 3$.

Step 4 of 4

For $r=4$,

$$\begin{aligned} m &= 6q+4 \\ &= 2(3q+2) \end{aligned}$$
$$2 \mid m$$

Thus, 2 is a factor of m and m is a prime.

That is, $m=2$ a contradiction to $m \ne 2$.

Therefore, $r \ne 4$.

Thus, the only possible values of r are 1 or 5.

Therefore, for all prime except 2 and 3 has the form $6q+1$ or $6q+5$ for some integer q.

Chapter 4.5, Problem 40E

Problem

Prove each of the statement.

Exercise

If n is an odd integer, then $n4$ *mod* 16 = 1.

Step-by-step solution

Step 1 of 1

When n is an odd integer, n takes the form $2m + 1$, for some integer m

Now,

$$\begin{aligned} n^4 = (2m+1)^4 &= 16m^4 + 32m^3 + 24m^2 + 8m + 1 \\ &= 16(m^4 + 2m^3) + 8(3m^2 + m) + 1 \end{aligned}$$

$3m^2 + m = m(3m+1)$ is even for any integer m,

So $3m^2 + m = 2k$, for any integer k

$$\begin{aligned} &= 16(m^4 + 2m^3) + 8(2k) + 1 \\ &= 16\,(m^4 + 2m^3 + k) + 1 \end{aligned}$$

$\therefore\ n^4 = 16(m^4 + 2m^3 + k) + 1$

$n^4 - 1 = 16(m^4 + 2m^3 + k)$

$\Rightarrow n^4 - 1 = 16s$, where $s = m^4 + 2m^3 + k$ is an integer

i.e., $n^4 - 1$ is divisible by 16

i.e., n^4 is divided by 16, and leaves a remainder of 1

$\therefore\ n^4 \bmod 16 = 1$

Comments (2)

how to prove that 3m^2 + m is even?

why is 3m^2 + m even?

Chapter 4.5, Problem 41E

Problem

Prove each of the statement.

Exercise

For all real numbers x and y, $|x| \cdot |y| = |xy|$.

Step-by-step solution

Step 1 of 3

The objective is to show that $|x|\cdot|y| = |xy|$ for all real numbers x and y.

Case 1:

Suppose $x < 0, y < 0,$ then $|x| = -x, |y| = -y.$

So,

$$\begin{aligned}|x||y| &= (-x)(-y)\\ &= xy\end{aligned}$$

On the other hand, $x < 0, y < 0 \Rightarrow xy > 0.$

So, $|xy| = xy$

Therefore, $|x|\cdot|y| = |xy|.$

Step 2 of 3

Case 2:

Suppose $x < 0, y > 0,$ then $|x| = -x, |y| = y.$

So,

$$\begin{aligned}|x||y| &= (-x)(y)\\ &= -xy\end{aligned}$$

On the other hand, $x < 0, y > 0 \Rightarrow xy < 0.$

So, $|xy| = -xy$

Therefore, $|x|\cdot|y| = |xy|.$

Step 3 of 3

Case 3:

Suppose $x > 0, y > 0,$ then $|x| = x, |y| = y.$

So,

$$\begin{aligned}|x||y| &= (x)(y)\\ &= xy\end{aligned}$$

On the other hand, $x > 0, y > 0 \Rightarrow xy > 0.$

So, $|xy| = xy$

Therefore, $|x|\cdot|y| = |xy|.$

From the above cases, conclude that $|x|\cdot|y| = |xy|.$

Chapter 4.5, Problem 42E

Problem

Prove the statement

For all real numbers *r* and *c* with $c \geq 0$, $-c \leq r \leq c$ if, and only if, $|r| \leq c$. (*Hint:* Proving *A* if, and only if, *B* requires proving both if *A* then *B* and if *B* then *A*.)

Step-by-step solution

Step 1 of 3

Consider the given statement.

For all real numbers *r* and *c* with $c \geq 0,\ -c \leq r \leq c$, if and only if, $|r| \leq c$.

The main objective of this given problem is to prove the given statement.

Step 2 of 3

Proof:

Let $c, r \in \mathbb{R}$.

Part 1:

Let $-c \leq r \leq c$.

Case 1:

Let $r \geq 0$. Here $|r| = r$.

$$-c \leq r \leq c$$
$$\Rightarrow -c \leq |r| \leq c \quad [\text{Since } |r| = r]$$
$$\Rightarrow |r| \leq c$$

Case 2:

Let $r < 0$. Here $|r| = -r$.

$$-c \leq r \leq c$$
$$-c \leq -|r| \leq c \quad [\text{Since } |r| = -r]$$
$$-c \leq -|r|$$
$$|r| \leq c$$

In both possible cases, $|r| \leq c$.

Step 3 of 3

Part 2:

Let $|r| \leq c$.

Case 1:

Let $r \geq 0$. Here $|r| = r$.

$$|r| \leq c$$
$$r \leq c \quad [\text{Since } |r| = r]$$
$$-c \leq r \leq c \quad [\text{since } c \geq 0,\ -c \leq 0]$$

Case 2:

Let $r < 0$. Here $|r| = -r$.

$$|r| \leq c$$
$$\Rightarrow -r \leq c \quad [\text{Since } |r| = -r]$$
$$\Rightarrow r \geq -c$$
$$\Rightarrow -c \leq r \leq c \quad [\text{since } r < 0 \text{ and } 0 \leq c \text{ then } r \leq c]$$

In both possible cases, $-c \leq r \leq c$.

Chapter 4.5, Problem 43E

Problem

Prove the statement

For all real numbers *a* and *b*, ||*a*|−|*b*|| ≤ |*a*−*b*|.

Step-by-step solution

Step 1 of 3

Consider the given statement.

For all real numbers *a* and *b*, $\left||a|-|b|\right| \le |a-b|$.

The main objective of this given problem is to prove the given statement.

Step 2 of 3

Proof:

Let *a* and *b* be any real numbers.

Apply the triangle inequality with $x = a - b$ and $y = b$.

$$\begin{aligned}
&|x+y| \le |x| + |y| \\
&|(a-b)+b| \le |a-b| + |b| \\
&|a| \le |a-b| + |b| \\
&|a| - |b| \le |a-b|
\end{aligned}$$

Apply the triangle inequality with $x = b - a$ and $y = a$.

$$\begin{aligned}
&|x+y| \le |x| + |y| \\
&|(b-a)+a| \le |b-a| + |a| \\
&|b| \le |b-a| + |a| \\
&|b| - |a| \le |b-a| \\
&-(|a| - |b|) \le |a-b|
\end{aligned}$$

Step 3 of 3

Also observe the following,

$$\begin{aligned}
&-(|a| - |b|) \le |a-b| \\
&\Rightarrow |a| - |b| \ge -|a-b| \\
&\Rightarrow |a| - |b| \ge |-(a-b)| \\
&\Rightarrow |a| - |b| \ge |a-b| \\
&\Rightarrow |a-b| \le |a| - |b|
\end{aligned}$$

Observe from above equations as follows.

$$-(|a| - |b|) \le |a| - |b| \le |a-b| \le |a| - |b|$$

$$\left||a| - |b|\right| \le |a-b| \qquad \begin{bmatrix} -x \le a \le x \\ \Rightarrow |x| \le a \end{bmatrix}$$

Chapter 4.5, Problem 44E

Problem

A matrix **M** has 3 rows and 4 columns.

$$\begin{bmatrix} a_{11} & a_{12} & a_{13} & a_{14} \\ a_{21} & a_{22} & a_{23} & a_{24} \\ a_{31} & a_{32} & a_{33} & a_{34} \end{bmatrix}$$

The 12 entries in the matrix are to be stored in *row major* form in locations 7,609 to 7,620 in a computer's memory.This means that the entries in the first row (reading left to right) are stored first, then the entries in the second row, and finally the entries in the third row.

a. Which location will *a*22 be stored in?

b. Write a formula (in *i* and *j*) that gives the integer *n* so that *ai j* is stored in location 7,609 +*n*.

c. Find formulas (in *n*) for *r* and *s* so that *ars* is stored in location 7,609 +*n*.

Step-by-step solution

Step 1 of 4

Given

A matrix M has 3 rows and 4 columns.

$$M = \begin{bmatrix} a_{11} & a_{12} & a_{13} & a_{14} \\ a_{21} & a_{22} & a_{23} & a_{24} \\ a_{31} & a_{32} & a_{33} & a_{34} \end{bmatrix}$$

The 12 entries in the matrix are to be stored in row major form in locations 7,609 to 7,620 in a computer's memory. This means that the entries in the first row are stored first, then the entries in the second row, and finally the entries in the third row.

(a)

a_{11} Will be stored in 7609

a_{22} Will be stored in $7609+5=\boxed{7614}$

Step 2 of 4

(b)

In first row, a_{1j} will be stored in $7609+(j-1)$

In second row, a_{2j} will be stored in $7609+4+(j-1)$

In third row, a_{3j} will be stored in $7609+4\cdot 2+(j-1)$

Therefore, a_{ij} will be stored in $7609+4(i-1)+(j-1)$

Hence a_{ij} will be stored in $7609+n$ where $\boxed{n=4(i-1)+(j-1)}$

Step 3 of 4

(c)

From (b), we obtain:

a_{rs} Will be stored in $7609+n$ where $n=4(r-1)+(s-1)$

Where $0\le r-1<3, 0\le s-1<4$

$$r-1=\left\lfloor \frac{n}{4} \right\rfloor$$

$$r=\left\lfloor \frac{n}{4} \right\rfloor+1$$

Step 4 of 4

Then

$$s-1=n \bmod 4$$

$$s=n \bmod 4+1$$

Since $1\le r\le 3$, therefore $0\le n\le 11$

Therefore

$$\boxed{r=\left\lfloor \frac{n}{4} \right\rfloor+1,\ s=n \bmod 4+1 \text{ where } 0\le n\le 11}$$

Chapter 4.5, Problem 45E

Problem

Let **M** be a matrix with *m* rows and *n* columns, and suppose that the entries of **M** are stored in a computer's memory in row major form (see exercise 47) in locations *N*, *N* + 1, *N* + 2, . . . , *N* + *mn* − 1. Find formulas in *k* for *r* and *s* so that *ars* is stored in location *N* + *k*.

Reference:

A matrix **M** has 3 rows and 4 columns.

$$\begin{bmatrix} a_{11} & a_{12} & a_{13} & a_{14} \\ a_{21} & a_{22} & a_{23} & a_{24} \\ a_{31} & a_{32} & a_{33} & a_{34} \end{bmatrix}$$

The 12 entries in the matrix are to be stored in *row major* form in locations 7,609 to 7,620 in a computer's memory.This means that the entries in the first row (reading left to right) are stored first, then the entries in the second row, and finally the entries in the third row.

a. Which location will *a*22 be stored in?

b. Write a formula (in *i* and *j*) that gives the integer *n* so that *ai j* is stored in location 7,609 +*n*.

c. Find formulas (in *n*) for *r* and *s* so that *ars* is stored in location 7,609 +*n*.

Step-by-step solution

Step 1 of 2

Given

M be a matrix with m rows and n columns, and suppose that the entries of M are stored in a computer's memory in row major form in locations $N, N+1, N+2, \ldots, N+mn-1$.

Given that $M=(a_{rs})_{m\times n}$ is a matrix with m rows and n columns

In first row, a_{1s} will be stored in $N+s-1$

In second row, a_{2s} will be stored in $N+n+(s-1)$

In third row, a_{3s} will be stored in $N+2\cdot n+(s-1)$

Therefore, a_{rs} will be stored in $N+(r-1)n+(s-1)$

Hence a_{rs} will be stored in $N+k$ where $k=n(r-1)+(s-1)$

Step 2 of 2

And $0\le r-1<m, 0\le s-1<n$

$$r-1=\left\lfloor \frac{k}{n} \right\rfloor$$

$$r=\left\lfloor \frac{k}{n} \right\rfloor+1$$

$$s-1=k \bmod n$$

$$s=k \bmod n+1$$

Since $1\le r\le m$, $0\le s-1<n$ therefore $0\le k\le mn-1$

Therefore

$$\boxed{r=\left\lfloor \frac{k}{n} \right\rfloor+1,\ s=k \bmod n+1 \text{ where } 0\le k\le mn-1}$$

Chapter 4.5, Problem 46E

Problem

If m, n, and d are integers, $d > 0$, and $m \bmod d = n \bmod d$, does it necessarily follow that $m = n$? That $m - n$ is divisible by d? Prove your answers.

Step-by-step solution

Step 1 of 3

It is given that m and n are integers, d is a positive integer such that $m \bmod d = n \bmod d$

Suppose $m \bmod d = k = n \bmod d$

So from the quotient-remainder theorem, we have

$m = dp + k$ and $n = dq + k$, for some integers p and q

If $p \neq q$, then $dp \neq dq$

$\Rightarrow dp + k \neq dq + k$

$\Rightarrow m \neq n$

So from this, we can say that $m \bmod d = n \bmod d$ need not imply $m = n$

Step 2 of 3

On the other hand, $m - n = (dp + k) - (dq + k)$

$= dp - dq$

$= d(p - q)$

Since $p \neq q$, $p - q \neq 0$

So $m - n = d(p - q)$

$\Rightarrow m - n$ is an integer multiple of d

In other words, d divides $m - n$

Step 3 of 3

For instance, $13 \bmod 7 = 20 \bmod 7$

However, $13 \neq 20$

Chapter 4.5, Problem 47E

Problem

If m, n, and d are integers, $d > 0$, and $d \mid (m - n)$, what is the relation between $m \bmod d$ and $n \bmod d$? Prove your answer.

Step-by-step solution

Step 1 of 1

555-3.4-45E SA Code: 5589

SR: 5892

We are given $d \mid (m - n)$

So from the quotient-remainder theorem, we have

$(m - n) = ds + 0$. --------- (1)

Suppose $m \bmod d = p$, $n \bmod d = q$, for some integers p and q

i.e., $m = da + p$, $n = db + q$, for some integers a and b

$\Rightarrow m - n = d(a - b) + (p - q)$ --------- (2)

Now, from the uniqueness of the quotient-remainder theorem, equations (1) and (2) give

$p - q = 0$

$\Rightarrow p = q$

$\Rightarrow m \bmod d = n \bmod d$

Chapter 4.5, Problem 48E

Problem

If *m, n, a, b,* and *d* are integers, *d* > 0, and *m mod d* = *a* and *n mod d* = *b*, is *(m + n) mod d* = *a + b*? Is *(m + n) mod d* = *(a + b) mod d*? Prove your answers.

Step-by-step solution

Step 1 of 2

The objective is to show whether $(m+n)\bmod d=(a+b)\bmod d$ or not.

As $m\bmod d=a$ and $n\bmod d=b$ then by definition, $m=dp+a$ and $n=dq+b$ for some integers p,q and $0\le a<d, 0\le b<d$.

$$m+n=d(p+q)+(a+b)$$

It is not necessary that $a<d$ and $b<d\Rightarrow a+b<d$.

Now apply the quotient-remainder theorem.

$$a+b=dt+k$$
$$(a+b)\bmod d=k$$

Step 2 of 2

Substitute $a+b=dt+k$ in $m+n=d(p+q)+(a+b)$.

$$\begin{aligned} m+n&=d(p+q)+dt+k\\ &=d(p+q+t)+k \end{aligned}$$
$$(m+n)\bmod d=k$$

As $(a+b)\bmod d=k$, then

$$(m+n)\bmod d=k=(a+b)\bmod d.$$

Therefore, $(m+n)\bmod d=(a+b)\bmod d$.

Chapter 4.5, Problem 49E

Problem

If *m, n, a, b,* and *d* are integers, *d* > 0, and *m mod d* = *a* and*n mod d* = *b*, is *(mn) mod d* =*ab*? Is *(mn) mod d* =*abmod d*? Prove your answers.

Step-by-step solution

Step 1 of 3

If $m, n, a, b,$ and d are integers, $d > 0$, and $m \bmod d = a$ and $n \bmod d = b$

Suppose that $d = 4, m = n = 7$

$$a = 7 \bmod 4 = 3$$
$$b = 7 \bmod 4 = 3$$
$$(mn) \bmod d = 49 \bmod 4 = 1$$
$$ab = 9$$

Therefore, $\boxed{(mn) \bmod d \neq ab}$ for $m = n = 7, d = 4, a = b = 3$

Step 2 of 3

We need to prove $(mn) \bmod d = (ab) \bmod d$

Since $m \bmod d = a$, there exist unique integers q_1 such that $m = dq_1 + a$ where $0 \le a < d$

Since $n \bmod d = b$, there exist unique integers q_2 such that $n = dq_2 + b$ where $0 \le b < d$

Suppose $(ab) \bmod d = r$

Then there exist a unique integer q_3 such that $ab = dq_3 + r$

Where $0 \le r < d$

Step 3 of 3

Now

$$\begin{aligned} mn &= (dq_1 + a)(dq_2 + b) \\ &= d(dq_1q_2 + bq_1 + aq_2) + ab \\ &= d(dq_1q_2 + bq_1 + aq_2) + dq_3 + r \\ &= d(dq_1q_2 + bq_1 + aq_2 + q_3) + r \end{aligned}$$

$mn = dq + r$ Where $q = dq_1q_2 + bq_1 + aq_2 + q_3$ is an integer and $0 \le r < d$

Therefore, $(mn) \bmod d = r = (ab) \bmod d$

Hence

$$\boxed{(mn) \bmod d = (ab) \bmod d}$$

Chapter 4.5, Problem 50E

Problem

Prove that if *m*, *d*, and *k* are integers and *d* > 0, then *(m + dk) mod d = m mod d*.

Step-by-step solution

Step 1 of 2

The objective is to prove $(m+dk)\bmod d = m \bmod d$, where $m, d,$ and k are integers and $d > 0$.

Step 2 of 2

Suppose $m, d,$ and k are nonnegative integers and $d > 0$.

Let $a = m \bmod d$.

By the quotient-remainder theorem, there exist integer q such that:

$m = dq + a$, where $0 \le a < d$.

Substitute $m = dq + a$ in $m + dk$.

$$\begin{aligned} m + dk &= (dq + a) + dk \\ &= dq + a + dk \\ &= d(q+k) + a \qquad \text{distributive property} \end{aligned}$$

As sum of two integers is an integer, it follows that $q + k$ is an integer and $0 \le a < d$.

By using the quotient remainder theorem, rewrite $m + dk = d(q+k) + a$ as,

$(m+dk)\bmod d = a$

Thus, $(m+dk)\bmod d = a = m \bmod d \qquad \text{since } a = m \bmod d$

Therefore, $\boxed{(m+dk)\bmod d = m \bmod d}$.

Chapter 4.6, Problem 1E

Problem

Compute $\lfloor x \rfloor$ and $\lceil x \rceil$ for each of the values of *x* in 1–4.

37.999

Step-by-step solution

Step 1 of 1

$x = 37.999$

Since $37 < 37.999 < 38$

Thus, $\lfloor 37.999 \rfloor = 37$ and $\lceil 37.999 \rceil = 38$

Chapter 4.6, Problem 2E

Problem

Compute $\lfloor x \rfloor$ and $\lceil x \rceil$ for each of the values of *x* in 1–4.

17/4

Step-by-step solution

Step 1 of 1

$x = 17|4$

$17|4 = 4.25$ and $4 < 4.25 < 5$

Thus, $\lfloor 17|4 \rfloor = 4$ and $\lceil 17|4 \rceil = 5$

Chapter 4.6, Problem 3E

Problem

Compute $\lfloor x \rfloor$ and $\lceil x \rceil$ for each of the values of x in 1–4.

−14.00001

Step-by-step solution

Step 1 of 1

$x = -14.00001$

$-15 < -14.00001 < -14$

Thus, $\lfloor -14.00001 \rfloor = -15$ and $\lceil -14.00001 \rceil = -14$

Chapter 4.6, Problem 4E

Problem

Compute $\lfloor x \rfloor$ and $\lceil x \rceil$ for each of the values of *x* in 1–4.

−32/5

Step-by-step solution

Step 1 of 4

The objective is to compute $\lfloor -32/5 \rfloor$ and $\lceil -32/5 \rceil$.

Find $\lfloor -32/5 \rfloor$.

For any real number *x*, $\lfloor x \rfloor$, called the floor of *x*, is defined as that unique integer *n* such that $n \le x < n+1$.

In other words, $\lfloor x \rfloor$ is the greatest integer less than or equal to *x*.

Step 2 of 4

Now,

$$\lfloor -32/5 \rfloor = \lfloor -6.4 \rfloor$$

Also, $-7 < -6.4 < -6$.

Therefore, the greatest integer less than or equal to -6.4 is -7.

Hence, $\boxed{\lfloor -32/5 \rfloor = -7}$.

Step 3 of 4

Find $\lceil -32/5 \rceil$.

For any real number *x*, $\lceil x \rceil$, called the ceiling of *x*, is defined as that unique integer *n* such that $n-1 < x \le n$.

In other words, $\lceil x \rceil$ is the least integer greater than or equal to *x*.

Step 4 of 4

Now,

$$\lceil -32/5 \rceil = \lceil -6.4 \rceil$$

Also, $-7 < -6.4 < -6$.

Therefore, the least integer greater than or equal to -6.4 is -6.

Hence, $\boxed{\lceil -32/5 \rceil = -6}$.

Chapter 4.6, Problem 5E

Problem

Use the floor notation to express 259 *div* 11 and 259 *mod* 11.

Step-by-step solution

Step 1 of 2

259 div 11 $=\lfloor 259|11 \rfloor$

$=\lfloor 23.54 \rfloor$

$=23$

$\therefore \lfloor 259|11 \rfloor = 23$

Step 2 of 2

259 mod 11 $=259-11.\lfloor 259|11 \rfloor$

$=259-11(23)$

$=259-253$

$=6$

$\therefore$ The floor notation of 259 mod 11 is 6

Chapter 4.6, Problem 6E

Problem

If k is an integer, what is $\lceil k \rceil$? Why?

Step-by-step solution

Step 1 of 1

By the definition of ceiling function, $n - 1 < x \leq n \Rightarrow \lceil x \rceil = n$ where x is any real number and n is an integer.

Suppose that k is an integer

Then, $\lceil k \rceil = k$ because k is an integer and $k - 1 < k \leq k$

Thus, $\lceil k \rceil = k$, where k is an integer

Chapter 4.6, Problem 7E

Problem

If k is an integer, what is $\left\lceil k + \frac{1}{2} \right\rceil$? Why?

Step-by-step solution

Step 1 of 2

Suppose k is an integer.

Then, $k + \frac{1}{2}$ is not an integer.

Objective is to identify the ceiling function $\left\lceil k + \frac{1}{2} \right\rceil$.

But $k + \frac{1}{2}$ lies between two integers k and $k+1$.

Step 2 of 2

From the definition of ceiling function,

If x is a real number and n is an integer, then

$\lceil x \rceil = n \Leftrightarrow n - 1 < x \leq n.$

Here, $x = k + \frac{1}{2}$ is a real number.

Then, the ceiling function $\left\lceil k + \frac{1}{2} \right\rceil = k + 1$, because k is an integer and $k < k + \frac{1}{2} \leq k + 1$

From the definition of the ceiling function, $\left\lceil k + \frac{1}{2} \right\rceil = k + 1.$

Hence, the ceiling function $\left\lceil k + \frac{1}{2} \right\rceil$ is an integer.

Chapter 4.6, Problem 8E

Problem

Seven pounds of raw material are needed to manufacture each unit of a certain product. Express the number of units that can be produced from n pounds of raw material using either the floor or the ceiling notation. Which notation is more appropriate?

Step-by-step solution

Step 1 of 2

To manufacture a certain product, 7 pound of raw materials is required in each unit.

Now the objective is to express the number of units that can be produced from n pounds.

To produce n pounds in each unit, divide the n pounds by 7 pounds.

So, the expression is $\boxed{\frac{n}{7}}$.

Step 2 of 2

And the floor notation is more appropriate. If the ceiling notation is used, two different formulas are needed, depending on whether $\frac{n}{7}$ is an integer or not.

Chapter 4.6, Problem 9E

Problem

Boxes, each capable of holding 36 units, are used to ship a product from the manufacturer to a wholesaler. Express the number of boxes that would be required to ship *n* units of the product using either the floor or the ceiling notation. Which notation is more appropriate?

Step-by-step solution

Step 1 of 3

Floor of x :

Given any real number x, the floor of x, denoted $\lfloor x \rfloor$, is defined as follows:

$\lfloor x \rfloor =$ that unique integer n such that $n \le x < n+1$

Symbolically, if x is a real number and n is an integer, then

$\lfloor x \rfloor = n \Leftrightarrow n \le x < n+1$

Step 2 of 3

Ceiling of x :

Given any real number x, the ceiling of x, denoted $\lceil x \rceil$, is defined as follows:

$\lceil x \rceil =$ that unique integer n such that $n-1 < x \le n$

Symbolically, if x is a real number and n is an integer, then

$\lceil x \rceil = n \Leftrightarrow n-1 < x \le n$

Step 3 of 3

Given that each box has capacity of holding 36 units

Then the number of boxes that would be required to ship 36 units is 1

The number of boxes that would be required to ship 1 unit is $\left\lceil \frac{1}{36} \right\rceil$

The number of boxes that would be required to ship n units is $\left\lceil \frac{n}{36} \right\rceil$

Since the capacity of holding can't exceed 36 units.

Therefore, ceiling of $\frac{n}{36}$ is more appropriate

Chapter 4.6, Problem 10E

Problem

If 0 = Sunday, 1 = Monday, 2 = Tuesday, . . . , 6 = Saturday, then January 1 of year *n* occurs on the day of the week given by the following formula:

$$\left(n+\left\lfloor\frac{n-1}{4}\right\rfloor-\left\lfloor\frac{n-1}{100}\right\rfloor+\left\lfloor\frac{n-1}{400}\right\rfloor\right) mod\ 7.$$

a. Use this formula to find January 1 of

i. 2050 ii. 2100 iii. the year of your birth.

b. Interpret the different components of this formula.

Step-by-step solution

Step 1 of 7

(a)

(I)

The objective is to find the day of the week when January 1, 2050 occurs.

January 1 of year *n* occurs on the day of the week given by the formula

$$\left(n+\left\lfloor\frac{n-1}{4}\right\rfloor-\left\lfloor\frac{n-1}{100}\right\rfloor+\left\lfloor\frac{n-1}{400}\right\rfloor\right)\bmod 7$$

Substitute 2050 for *n* in the above formula.

Step 2 of 7

Then,

$$\begin{aligned}&\left(2050+\left\lfloor\frac{2050-1}{4}\right\rfloor-\left\lfloor\frac{2050-1}{100}\right\rfloor+\left\lfloor\frac{2050-1}{400}\right\rfloor\right)\bmod 7\\&=\left(2050+\left\lfloor\frac{2049}{4}\right\rfloor-\left\lfloor\frac{2049}{100}\right\rfloor+\left\lfloor\frac{2049}{400}\right\rfloor\right)\bmod 7\\&=(2050+512-20+5)\bmod 7\\&=2547\bmod 7\\&=6\end{aligned}$$

As 6 = Saturday, January 1 of 2050 occurs on a $\boxed{\text{saturday}}$.

Step 3 of 7

(ii)

The objective is to find the day of the week when January 1, 2100 occurs.

January 1 of year *n* occurs on the day of the week given by the formula

$$\left(n+\left\lfloor\frac{n-1}{4}\right\rfloor-\left\lfloor\frac{n-1}{100}\right\rfloor+\left\lfloor\frac{n-1}{400}\right\rfloor\right)\bmod 7$$

Substitute 2100 for *n* in the above formula.

Step 4 of 7

Then,

$$\begin{aligned}&\left(2100+\left\lfloor\frac{2100-1}{4}\right\rfloor-\left\lfloor\frac{2100-1}{100}\right\rfloor+\left\lfloor\frac{2100-1}{400}\right\rfloor\right)\bmod 7\\&=\left(2100+\left\lfloor\frac{2099}{4}\right\rfloor-\left\lfloor\frac{2099}{100}\right\rfloor+\left\lfloor\frac{2099}{400}\right\rfloor\right)\bmod 7\\&=(2100+524-20+5)\bmod 7\\&=2609\bmod 7\\&=5\end{aligned}$$

As 6 = Friday, January 1 of 2100 occurs on a $\boxed{\text{Friday}}$.

Step 5 of 7

(iii)

The objective is to find the day of the week when January 1 of the year of your birth occurs.

January 1 of year *n* occurs on the day of the week given by the formula

$$\left(n+\left\lfloor\frac{n-1}{4}\right\rfloor-\left\lfloor\frac{n-1}{100}\right\rfloor+\left\lfloor\frac{n-1}{400}\right\rfloor\right)\bmod 7$$

Substitute your year of the birth for *n* in the above formula and solve it. The above formula would return one of the values 0, 1, 2, 3, 4, 5 or 6. Each of these values corresponds to a day of the week as shown:

0 = Sunday

1 = Monday

2 = Tuesday

3 = Wednesday

4 = Thursday

5 = Friday

6 = Saturday

Step 6 of 7

(b)

The objective is to interpret the different components of the formula used to determine the day of the week when January 1 of year *n* occurs, given by

$$\left(n+\left\lfloor\frac{n-1}{4}\right\rfloor-\left\lfloor\frac{n-1}{100}\right\rfloor+\left\lfloor\frac{n-1}{400}\right\rfloor\right)\bmod 7.$$

An ordinary year consists of 365 days.

Now, $365\bmod 7=1$.

Therefore, for every year one day is added.

<u>Leap year:</u> A leap year consists of 366 days. A non-century year that is evenly divisible by 4 is a leap year. If the year is a century, then it is a leap year only if it is divisible by 400.

Step 7 of 7

The formula to calculate January 1 of year *n* consists of four components:

1. The first component is *n* which gives the number of years, giving one day for each year.

2. The second component is $\left\lfloor\frac{n-1}{4}\right\rfloor$. This gives the number of leap years. For every leap year, 1 day is added. In the numerator, 1 is subtracted from *n* as February of that year is not encountered. Therefore, even if that year is a leap year, one day is not added for that year.

3. The third and the fourth components are $\left\lfloor\frac{n-1}{100}\right\rfloor$ and $\left\lfloor\frac{n-1}{400}\right\rfloor$. The third component gives the number of centuries and the fourth component gives the number of centuries that are divisible by 400. A century is a leap year only if it is divisible by 400. One day is subtracted for every century except for the centuries that are divisible by 400. These two components take care of the leap years that fall on a century.

Therefore, the formula $\left(n+\left\lfloor\frac{n-1}{4}\right\rfloor-\left\lfloor\frac{n-1}{100}\right\rfloor+\left\lfloor\frac{n-1}{400}\right\rfloor\right)\bmod 7$ is used to find the day of the week when January 1 of year *n* occurs.

Chapter 4.6, Problem 11E

Problem

State a necessary and sufficient condition for the floor of a real number to equal that number.

Step-by-step solution

Step 1 of 2

Floor function: the floor function of a real number r is the greatest integer less than or equal to r. This function is denoted by the brackets $\lfloor \cdot \rfloor$.

For example, $\lfloor 5 \rfloor = 5$, $\lfloor 6.3 \rfloor = 6$, $\lfloor \pi \rfloor = 3$, $\lfloor -13.42 \rfloor = -14$ etc.

Step 2 of 2

Objective is to state a necessary and sufficient condition for the floor of a real number to equal that number.

First observe from the definition that the floor function always produces an integer.

Therefore, in order to get the result that floor function of a real number is the same real number, that real number must be an integer. On the other hand, if the number is an integer then the floor function will produce as a result the integer.

Hence the required answer for this problem is the integers only.

Chapter 4.6, Problem 12E

Problem

Let S be the statement: For any odd integer n, $\lfloor n/2 \rfloor = (n - 1)/2$. Then S is true, but the following "proof" is incorrect. Find the mistake.

"**Proof:** Suppose n is any odd integer. Then $n = 2k + 1$ for some integer k. Consequently,

$$\left\lfloor \frac{2k+1}{2} \right\rfloor = \frac{(2k+1)-1}{2} = \frac{2k}{2} = k.$$

But $n = 2k + 1$. Solving for k gives $k = (n - 1)/2$. Hence, by substitution, $\lfloor n/2 \rfloor = (n - 1)/2$."

Step-by-step solution

Step 1 of 2

Consider the given proof for the statement.

The main objective of this problem is to find the mistake in the proof

Step 2 of 2

The mistake is that the "proof" assumes the equality $\left\lfloor \frac{n}{2} \right\rfloor = \frac{n-1}{2}$ that has to prove. The proof uses the result as if it were known to be true.

Chapter 4.6, Problem 13E

Problem

Prove that if n is any even integer, then $\lfloor n/2 \rfloor = n/2.$

Step-by-step solution

Step 1 of 2

Consider the following statement,

"If n is any even integer, then $\lfloor n/2 \rfloor = n/2.$"

The objective is to prove the above statement.

Recall the definition of Floor function as,

<u>Floor Function</u> $\lfloor x \rfloor$: It is the largest integer that is less than or equal to $x.$

Step 2 of 2

Suppose that n is an even integer.

Then, $n = 2k$, for some integer $k.$

Now,

$$\begin{aligned}\lfloor n/2 \rfloor &= \lfloor (2k)/2 \rfloor \quad (\text{Since } n = 2k)\\ &= \lfloor k \rfloor \quad (\text{The floor function of an integer is the integer itself})\\ &= k\\ &= \frac{n}{2} \quad (\text{Since } n = 2k)\end{aligned}$$

Therefore, $\lfloor n/2 \rfloor = n/2$ when n is any even integer.

Chapter 4.6, Problem 14E

Problem

Show that the following statement is false.

For all real numbers x and y, $\lfloor x - y \rfloor = \lfloor x \rfloor - \lfloor y \rfloor$.

Step-by-step solution

Step 1 of 2

Consider the given statement.

For all real numbers x and y, $\lfloor x - y \rfloor = \lfloor x \rfloor - \lfloor y \rfloor$.

The objective is to disprove the given statement by giving a counterexample.

Step 2 of 2

Counter example:

Let $x = 3$ and $y = 2.9$.

Calculate the value of $\lfloor x - y \rfloor$.

$$\begin{aligned}\lfloor x - y \rfloor &= \lfloor 3 - 2.9 \rfloor \\ &= \lfloor 0.1 \rfloor \\ &= 0\end{aligned}$$

Calculate the value of $\lfloor x \rfloor - \lfloor y \rfloor$.

$$\begin{aligned}\lfloor x \rfloor - \lfloor y \rfloor &= \lfloor 3 \rfloor - \lfloor 2.9 \rfloor \\ &= 3 - 2 \\ &= 1\end{aligned}$$

Observe that $\lfloor x - y \rfloor = 0 \neq 1 = \lfloor x \rfloor - \lfloor y \rfloor$.

Thus, $\lfloor x - y \rfloor \neq \lfloor x \rfloor - \lfloor y \rfloor$.

Hence, the statement is false.

Chapter 4.6, Problem 15E

Problem

Some of the statements in 14–22 are true and some are false. Prove each true statement and find a counterexample for each false statement, but do not use Theorem 4.5.1. in your proofs.

For all real numbers *x*, $\lfloor x-1 \rfloor = \lfloor x \rfloor - 1.$

Step-by-step solution

Step 1 of 2

Consider the statement as,

"For all real numbers x, $\lfloor x-1 \rfloor = \lfloor x \rfloor - 1$."

The objective is to prove the above statement if it is true else provide a counter example.

Recall the definition of Floor function:

<u>Floor Function</u> $\lfloor x \rfloor$:It is the largest integer that is less than or equal to x.

Step 2 of 2

Let x be any real number, then there exists an integer p,such that $\lfloor x \rfloor = p$ .....(1)

From the definition of floor function, the value of x is either equal to p or lies between p and $p+1$.

That is,

$p \le x < p+1$.

Subtract 1 from the above inequality as,

$p-1 \le x-1 < p$ ..... (2)

Here, $p-1$ is also an integer since p is an integer.

Thus, apply the definition of floor function to the inequality in (2) to get,

$$\lfloor x-1 \rfloor = p-1$$
$$\lfloor x-1 \rfloor = \lfloor x \rfloor - 1 \quad \text{From equation } (1).$$

Since x is an arbitrary real number, the equation holds $\lfloor x-1 \rfloor = \lfloor x \rfloor - 1$ for all real numbers.

Chapter 4.6, Problem 16E

Problem

Some of the statements in 14–22 are true and some are false. Prove each true statement and find a counterexample for each false statement, but do not use Theorem 4.5.1. in your proofs.

For all real numbers x, $\lfloor x^2 \rfloor = \lfloor x \rfloor^2$.

Step-by-step solution

Step 1 of 2

This is false

Counterexample

Let $x = -1.2$

Then, $\lfloor x^2 \rfloor = \lfloor (-1.2)^2 \rfloor$

$= \lfloor 1.44 \rfloor$

$= 1$

$\therefore \lfloor x^2 \rfloor = 1$

Step 2 of 2

And $\lfloor x \rfloor^2 = \lfloor -1.2 \rfloor^2$

$= (-2)^2$

$= 4$

$\therefore \lfloor x \rfloor^2 = 4$

Thus, $\lfloor x^2 \rfloor \neq \lfloor x \rfloor^2$

Chapter 4.6, Problem 17E

Problem

For all integers n,

$$\lfloor n/3 \rfloor = \begin{cases} n/3 & \text{if } n \bmod 3 = 0 \\ (n-1)/3 & \text{if } n \bmod 3 = 1 \\ (n-2)/3 & \text{if } n \bmod 3 = 2 \end{cases}.$$

Step-by-step solution

Step 1 of 3

Recall the definition of floor function as,

Floor function $\lfloor x \rfloor$: It is the largest integer that is less than or equal to x.

Consider the following statement,

$$\lfloor n/3 \rfloor = \begin{cases} n/3 & \text{if } n \bmod 3 = 0 \\ (n-1)/3 & \text{if } n \bmod 3 = 1 \\ (n-2)/3 & \text{if } n \bmod 3 = 2 \end{cases}$$

Case1:

If $n \bmod 3 = 0$, then there exists an integer p such that $n = 3p + 0 = 3p$.

$$\begin{aligned} \lfloor n/3 \rfloor &= \left\lfloor \frac{3p}{3} \right\rfloor \\ &= \lfloor p \rfloor \\ &= p \\ &= \frac{n}{3} \quad \text{Since } n = 3p \end{aligned}$$

Step 2 of 3

Case2:

If $n \bmod 3 = 1$, then there exists an integer p such that $n = 3p + 1$.

$$\begin{aligned} \lfloor n/3 \rfloor &= \left\lfloor \frac{3p+1}{3} \right\rfloor \\ &= \left\lfloor p + \frac{1}{3} \right\rfloor \\ &= p \quad \left(\begin{array}{l} \text{Since } p < p + \frac{1}{3} < p + 1 \text{ with } p \text{ and } p+1 \\ \text{as consecutive integers.} \end{array} \right) \\ &= \frac{n-1}{3} \quad \text{Since } n = 3p + 1 \Rightarrow p = \frac{n-1}{3} \end{aligned}$$

Step 3 of 3

Case3:

If $n \bmod 3 = 2$, then there exists an integer p such that $n = 3p + 2$.

$$\begin{aligned} \lfloor n/3 \rfloor &= \left\lfloor \frac{3p+2}{3} \right\rfloor \\ &= \left\lfloor p + \frac{2}{3} \right\rfloor \\ &= p \quad \left(\begin{array}{l} \text{Since } p < p + \frac{2}{3} < p + 1 \text{ with } p \text{ and } p+1 \\ \text{as consecutive integers.} \end{array} \right) \\ &= \frac{n-2}{3} \quad \text{Since } n = 3p + 2 \Rightarrow p = \frac{n-2}{3} \end{aligned}$$

Chapter 4.6, Problem 18E

Problem

Some of the statements in 14–22 are true and some are false. Prove each true statement and find a counterexample for each false statement, but do not use Theorem 4.5.1. in your proofs.

For all real numbers *x* and *y*, $\lceil x+y \rceil = \lceil x \rceil + \lceil y \rceil$.

Step-by-step solution

Step 1 of 2

This is false

Counterexample

Let $x = 2.6$ and $y = -1.6$

Now, $\lceil x+y \rceil = \lceil 2.6-1.6 \rceil$

$= \lceil 1 \rceil$

$= 1$

$\therefore \lceil x+y \rceil = 1$

Step 2 of 2

And $\lceil x \rceil + \lceil y \rceil = \lceil 2.6 \rceil + \lceil -1.6 \rceil$

$= 3 + (-1)$

$= 2$

$\therefore \lceil x \rceil + \lceil y \rceil = 2$

Thus, $\lceil x+y \rceil \neq \lceil x \rceil + \lceil y \rceil$

Chapter 4.6, Problem 19E

Problem

Some of the statements in 14–22 are true and some are false. Prove each true statement and find a counterexample for each false statement, but do not use Theorem 4.5.1. in your proofs.

For all real numbers *x*, $\lceil x-1 \rceil = \lceil x \rceil - 1.$

Step-by-step solution

Step 1 of 2

3434-4.5-19E AID: 725

By definition of ceiling of *x*, $\lceil x \rceil =$ that unique integer n such that $n-1 < x \le n$

i.e., $\lceil x \rceil = n \Leftrightarrow n-1 < x \le n$

Let $\lceil x-1 \rceil = m$

$\lceil x-1 \rceil = m$

$\Rightarrow m-1 < x-1 \le m$

$\Rightarrow m < x \le m+1$

$\Rightarrow \lceil x \rceil = m+1 \qquad (\text{by definition of celing of x})$

Therefore $\lceil x \rceil - 1 = (m+1)-1$

$= m$

$= \lceil x-1 \rceil$

Hence $\lceil x-1 \rceil = \lceil x \rceil - 1$

Step 2 of 2

Chapter 4.6, Problem 20E

Problem

Some of the statements in 14–22 are true and some are false. Prove each true statement and find a counterexample for each false statement, but do not use Theorem 4.5.1. in your proofs.

For all real numbers *x* and *y*, $\lceil xy \rceil = \lceil x \rceil \cdot \lceil y \rceil$.

Step-by-step solution

Step 1 of 2

This is false

Counterexample

Let $x = -1.5$ and $y = -1.2$

Then, $\lceil x \cdot y \rceil = \lceil (-1.5) \cdot (-1.2) \rceil$

$= \lceil 1.8 \rceil$

$= 2$

$\therefore \lceil x \cdot y \rceil = 2$

Step 2 of 2

And $\lceil x \rceil \cdot \lceil y \rceil = \lceil -1.5 \rceil \cdot \lceil -1.2 \rceil$

$= (-1)(-1)$

$= 1$

$\therefore \lceil x \rceil \cdot \lceil y \rceil = 1$

Thus, $\lceil x \cdot y \rceil \neq \lceil x \rceil \cdot \lceil y \rceil$

Chapter 4.6, Problem 21E

Problem

Some of the statements in 14–22 are true and some are false. Prove each true statement and find a counterexample for each false statement, but do not use Theorem 4.5.1. in your proofs.

For all odd integers *n*, $\lceil n/2 \rceil = (n+1)/2.$

Step-by-step solution

Step 1 of 2

It is given that *n* is an odd integer

So *n* = 2*m* +1, for some integer *m*

Now, $\left\lceil \frac{n}{2} \right\rceil = \left\lceil \frac{2m+1}{2} \right\rceil$

$= \left\lceil \frac{2m}{2} + \frac{1}{2} \right\rceil$

$= \left\lceil m + \frac{1}{2} \right\rceil$

$= m+1$, from the definition of the ceiling function

Step 2 of 2

Since *n* = 2*m* + 1, we have

n + 1 = 2*m* + 2

= 2(*m*+1)

This implies that *m*+1 = $\frac{n+1}{2}$

$\therefore \left\lceil \frac{n}{2} \right\rceil = \frac{n+1}{2}$

Chapter 4.6, Problem 22E

Problem

Some of the statements in 14–22 are true and some are false. Prove each true statement and find a counterexample for each false statement, but do not use Theorem 4.5.1. in your proofs.

For all real numbers *x* and *y*, $\lceil xy \rceil = \lceil x \rceil \cdot \lfloor y \rfloor$.

Step-by-step solution

Step 1 of 2

Conjecture given is that "for real numbers x and y, $\lceil xy \rceil = \lceil x \rceil . \lfloor y \rfloor$".

Assume that the conjecture is true for every real number x and y.

Let the real numbers be represented as follows:

$$x = x_{\text{integer}} + x_{\text{fraction}}$$
$$y = y_{\text{integer}} + y_{\text{fraction}}$$

Assume that the real numbers x and y used in this proof have the following properties:

1. $x > 1$ and $y > 1$
2. The integral part x_{integer} and y_{integer} are very large
3. The fractional part x_{fraction} and y_{fraction} are very small and both tend close to zero such that $\left| \text{integral_part}_{x \text{ or } y} \times \text{fractional_part}_{x \text{ or } y} \right| < 1$.

The above criterion of a number is valid for this conjecture as it is a valid real number.

Step 2 of 2

Given $\lceil xy \rceil = \lceil x \rceil . \lfloor y \rfloor$

LHS can be calculated as follows:

$$\begin{aligned}
\text{LHS} &= \lceil xy \rceil \\
&= \left\lceil \left(x_{\text{integer}} + x_{\text{fraction}} \right) \left(y_{\text{integer}} + y_{\text{fraction}} \right) \right\rceil \\
&= \left\lceil x_{\text{integer}} . y_{\text{integer}} + \left(x_{\text{integer}} . y_{\text{fraction}} + y_{\text{integer}} . x_{\text{fraction}} + x_{\text{fraction}} . y_{\text{fraction}} \right) \right\rceil (\text{As, it is assumed that fractional part tends close to } 0) \\
&= x_{\text{integer}} . y_{\text{integer}} + 1
\end{aligned}$$

Now RHS can be calculated as follows:

$$\begin{aligned}
\text{RHS} &= \lceil x \rceil \lfloor y \rfloor \\
&= \left\lceil x_{\text{integer}} + x_{\text{fraction}} \right\rceil \left\lfloor y_{\text{integer}} + y_{\text{fraction}} \right\rfloor \\
&= \left(x_{\text{integer}} + 1 \right) \left(y_{\text{integer}} \right) \\
&= x_{\text{integer}} . y_{\text{integer}} + y_{\text{integer}}
\end{aligned}$$

Clearly, $\text{LHS} \neq \text{RHS}$

Therefore, it is proved by the above counter-example that $\lceil xy \rceil \neq \lceil x \rceil . \lfloor y \rfloor$.

Hence, the given statement is false.

Chapter 4.6, Problem 23E

Problem

Prove each of the statements in 23–29.

For any real number *x*, if *x* is not an integer, then $\lfloor x \rfloor + \lfloor -x \rfloor = -1.$

Step-by-step solution

Step 1 of 2

Objective is to prove the statement $\lfloor x \rfloor + \lfloor -x \rfloor = -1$ for any real number x.

Suppose x is a real number that is not an integer.

Let $\lfloor x \rfloor = k.$

By the definition of floor, and because x is not an integer, $k < x < k+1$

Now, multiply both sides by -1.

$-k > -x > -k-1$

i.e., $-k-1 < -x < -k$

Since $(-k-1)$ is an integer,

$\lfloor -x \rfloor = -k-1.$ from the definition of floor

Step 2 of 2

Next, add both $\lfloor x \rfloor = k$ and $\lfloor -x \rfloor = -k-1$.

$\lfloor x \rfloor + \lfloor -x \rfloor = k + (-k-1)$

$= k - k - 1$

$= -1$

Thus, the required statement is $\boxed{\lfloor x \rfloor + \lfloor -x \rfloor = -1}$.

Chapter 4.6, Problem 24E

Problem

Prove each of the statements in 23–29.

For any integer *m* and any real number *x*, if *x* is not an integer, then $\lfloor x \rfloor + \lfloor m - x \rfloor = m - 1.$

Step-by-step solution

Step 1 of 1

Suppose *m* is an integer and *x* is a real number other than an integer

Then, by the definition of the floor function, we know that if $n \le x < n+1 \Rightarrow \lfloor x \rfloor = n$

Also, $n \le x < n+1 \Rightarrow -(n+1) \le -x < -n$

So $\lfloor -x \rfloor = -(n+1)$

Using the above and the definition, we know that $\lfloor m - x \rfloor = \lfloor m + (-x) \rfloor$

$= m + \lfloor -x \rfloor$

Now, $\lfloor x \rfloor + \lfloor m - x \rfloor = n + m - (n+1)$

$= m - 1$

$\therefore \lfloor x \rfloor + \lfloor m - x \rfloor = m - 1$

Chapter 4.6, Problem 25E

Problem

Prove each of the statements in 23–29.

For all real numbers x, $\lfloor \lfloor x/2 \rfloor /2 \rfloor = \lfloor x/4 \rfloor$.

Step-by-step solution

Step 1 of 3

Consider the statement is,

$$\text{For all real numbers } x, \left\lfloor \frac{\left\lfloor \frac{x}{2} \right\rfloor}{2} \right\rfloor = \left\lfloor \frac{x}{4} \right\rfloor$$

Prove it for all real numbers.

Step 2 of 3

For any real numbers x, $\lfloor x \rfloor$ is called as floor of x.

And it is defined as that unique integer n such that $n \le x < n+1$.

Let assume $\left\lfloor \frac{\left\lfloor \frac{x}{2} \right\rfloor}{2} \right\rfloor = k$

Then k is lies between $k \le \frac{\left\lfloor \frac{x}{2} \right\rfloor}{2} < k+1$, where k is unique integer number and integer number consist all real number and whole numbers.

Step 3 of 3

Now solve the expression as follows:

$$k \le \frac{\left\lfloor \frac{x}{2} \right\rfloor}{2} < k+1$$

$$2k \le \left\lfloor \frac{x}{2} \right\rfloor < 2(k+1) \qquad [\text{Both side multiply by } 2]$$

It means $\left\lfloor \frac{x}{2} \right\rfloor$ is lies between including $2k$ and excluding $2(k+1)$.

So, $\left\lfloor \frac{x}{2} \right\rfloor \in [2k, 2(k+1))$.

Similarly, $\left\lfloor \frac{x}{4} \right\rfloor \in [k, (k+1))$.

Now again simplify as follows:

$$k \le \left\lfloor \frac{x}{4} \right\rfloor < k+1$$

$$\text{So, } \left\lfloor \frac{x}{4} \right\rfloor = k$$

According to the question $\left\lfloor \frac{\left\lfloor \frac{x}{2} \right\rfloor}{2} \right\rfloor = \left\lfloor \frac{x}{4} \right\rfloor$.

That's why $\left\lfloor \frac{\left\lfloor \frac{x}{2} \right\rfloor}{2} \right\rfloor = k$.

After solving we conclude $\left\lfloor \frac{\left\lfloor \frac{x}{2} \right\rfloor}{2} \right\rfloor = k$ and $\left\lfloor \frac{x}{4} \right\rfloor = k$.

Where k is unique integer number and integer number consist all real number and whole numbers, in this case we use only real numbers.

Therefore, $\boxed{\left\lfloor \frac{\left\lfloor \frac{x}{2} \right\rfloor}{2} \right\rfloor = \left\lfloor \frac{x}{4} \right\rfloor}$.

Chapter 4.6, Problem 26E

Problem

Prove each of the statements in 23–29.

For all real numbers *x*, if $x - \lfloor x \rfloor < 1/2$ then

Step-by-step solution

Step 1 of 3

The objective is to prove that $\lfloor 2x \rfloor = 2\lfloor x \rfloor$ if $x - \lfloor x \rfloor < \frac{1}{2}$ for all real numbers *x*.

Let $x - \lfloor x \rfloor < \frac{1}{2}$ where *x* is a real number.

Then,

$2\left(x - \lfloor x \rfloor\right) < 1$ (multiplying both sides by 2)

Or $2x - 2\lfloor x \rfloor < 1$ (distributive property)

Or $2x < 2\lfloor x \rfloor + 1$ .....(1)

Step 2 of 3

For any real number *x*, $\lfloor x \rfloor$, called the floor of *x*, is defined as that unique integer *n* such that $n \le x < n+1$. That is, $\lfloor x \rfloor = n$.

From this definition, it is clear that $\lfloor x \rfloor \le x$ (as $n \le x$ and $\lfloor x \rfloor = n$)

Multiply both side by 2.

Then, $2\lfloor x \rfloor \le 2x$. .....(2)

Step 3 of 3

From (1) and (2),

$2\lfloor x \rfloor \le 2x < 2\lfloor x \rfloor + 1$

Also, $2\lfloor x \rfloor$ is an integer as both 2 and $\lfloor x \rfloor$ are integer, and product of integers is also an integer.

Therefore, from the definition of floor, $\lfloor 2x \rfloor = 2\lfloor x \rfloor$ which is what was to be shown.

Chapter 4.6, Problem 27E

Problem

Prove each of the statements in 23–29.

For all real numbers *x*, if $x - \lfloor x \rfloor \geq 1/2$

Step-by-step solution

Step 1 of 4

Consider the statement,

If $x-\lfloor x \rfloor \geq \frac{1}{2}$ then $\lfloor 2x \rfloor = 2\lfloor x \rfloor + 1$ for all real numbers x.

The objective is to prove this statement.

Step 2 of 4

Suppose x is any real number such that,

$x-\lfloor x \rfloor \geq \frac{1}{2}$

Multiply both sides by 2 gives,

$2x-2\lfloor x \rfloor \geq 1$

$2x-2\lfloor x \rfloor + 2\lfloor x \rfloor \geq 1+2\lfloor x \rfloor$ Add $2\lfloor x \rfloor$ on both sides,

$2x \geq 2\lfloor x \rfloor + 1 \quad \cdots\cdots(1)$

Step 3 of 4

Recollect the definition of floor,

The floor of x is denoted $\lfloor x \rfloor$ and is defined as,

For x is a real number and n is an integer, then $\lfloor x \rfloor = n$

If and only if $n \leq x < n+1$.

From the definition of floor, $\lfloor x \rfloor \leq x$.

$2\lfloor x \rfloor \leq 2x$ Multiply 2 on both sides. $\cdots\cdots(2)$

Step 4 of 4

Now, combine both inequalities (1) and (2) together gives,

$2\lfloor x \rfloor \leq 2x \geq 2\lfloor x \rfloor + 1$

Thus, by definition of floor $\boxed{\lfloor 2x \rfloor = 2\lfloor x \rfloor + 1}$.

Chapter 4.6, Problem 28E

Problem

Prove each of the statements in 23–29.

For any odd integer *n*,

$$\left\lfloor \frac{n^2}{4} \right\rfloor = \left(\frac{n-1}{2}\right)\left(\frac{n+1}{2}\right).$$

Step-by-step solution

Step 1 of 4

Let n be an odd integer

Then, $n = 2k+1$, for some integer k

We have to prove that $\left\lfloor \frac{n^2}{4} \right\rfloor = \left(\frac{n-1}{2}\right)\left(\frac{n+1}{2}\right)$

The left-hand side of the equation to be shown is

$$\left\lfloor \frac{n^2}{4} \right\rfloor = \left\lfloor \frac{(2k+1)^2}{4} \right\rfloor$$

$$= \left\lfloor \frac{4k^2+1+4k}{4} \right\rfloor$$

$$= \left\lfloor \frac{4k^2+4k}{4} + \frac{1}{4} \right\rfloor$$

Step 2 of 4

$$= \left\lfloor \frac{4(k^2+k)}{4} + \frac{1}{4} \right\rfloor$$

$$= \left\lfloor k^2+k+\frac{1}{4} \right\rfloor$$

$$= \left\lfloor k(k+1)+\frac{1}{4} \right\rfloor$$

$$= k(k+1)$$

Because $k(k+1)$ is an integer and

$$k(k+1) \le k(k+1)+\frac{1}{4} < [k(k+1)]+1$$

Step 3 of 4

And the right-hand side of the equation to be shown is

$$\left(\frac{n-1}{2}\right)\left(\frac{n+1}{2}\right) = \left(\frac{(2k+1)-1}{2}\right)\left(\frac{(2k+1)+1}{2}\right)$$

$$= \left(\frac{2k}{2}\right)\left(\frac{2k+2}{2}\right)$$

$$= k \cdot \frac{2(k+1)}{2}$$

Step 4 of 4

$$= k(k+1)$$

Since both the left-hand and right-hand sides are equal to $k(k+1)$, they are equal to each other.

That is, $\left\lfloor \frac{n^2}{4} \right\rfloor = \left(\frac{n-1}{2}\right)\left(\frac{n+1}{2}\right)$ [as was to be shown]

Chapter 4.6, Problem 29E

Problem

Prove each of the statements in 23–29.

For any odd integer *n*,

$$\left\lceil \frac{n^2}{4} \right\rceil = \frac{n^2+3}{4}.$$

Step-by-step solution

Step 1 of 2

Let n be an odd integer

Then, $n = 2k+1$, for some integer k

We have to prove that $\left\lceil \frac{n^2}{4} \right\rceil = \frac{n^2+3}{4}$

The left-hand side of the equation to be shown is

$$\left\lceil \frac{n^2}{4} \right\rceil = \left\lceil \frac{(2k+1)^2}{4} \right\rceil$$

$$= \left\lceil \frac{4k^2+1+4k}{4} \right\rceil$$

$$= \left\lceil \frac{4k^2+4k}{4} + \frac{1}{4} \right\rceil$$

$$= \left\lceil \frac{4(k^2+k)}{4} + \frac{1}{4} \right\rceil$$

$$= \left\lceil (k^2+k) + \frac{1}{4} \right\rceil$$

$$= k^2+k+1$$

Because k^2+k+1 is an integer and

$$k(k+1) \le (k^2+k) + \frac{1}{4} < k^2+k+1$$

Step 2 of 2

And the right-hand side of the equation to be shown is

$$\frac{n^2+3}{4} = \frac{(2k+1)^2+3}{4}$$

$$= \frac{4k^2+1+4k+3}{4}$$

$$= \frac{4k^2+4k+4}{4}$$

$$= \frac{4(k^2+k+1)}{4}$$

$$= k^2+k+1$$

Since both the left-hand and right-hand sides are equal to k^2+k+1, they are equal to each other.

That is, $\left\lceil \frac{n^2}{4} \right\rceil = \frac{n^2+3}{4}$

Chapter 4.6, Problem 30E

Problem

Prove the statement

For every integer *n*, $\left\lfloor \frac{n}{2} \right\rfloor + \left\lceil \frac{n}{2} \right\rceil = n.$

Step-by-step solution

Step 1 of 3

Consider the given statement.

For every integer *n*, $\left\lfloor \frac{n}{2} \right\rfloor + \left\lceil \frac{n}{2} \right\rceil = n.$

The main objective of this given problem is to prove the given statement.

Step 2 of 3

Proof:

Let *n* is any integer.

Consider two cases *n* as an even number and *n* as an odd number.

Case 1:

Let *n* be an even integer. Then, $n = 2k$ for some integer *k*.

$$\begin{aligned}
\left\lfloor \frac{n}{2} \right\rfloor + \left\lceil \frac{n}{2} \right\rceil &= \left\lfloor \frac{2k}{2} \right\rfloor + \left\lceil \frac{2k}{2} \right\rceil && [\text{by substitution}] \\
&= \lfloor k \rfloor + \lceil k \rceil && [\text{by algebra}] \\
&= k + k && [\text{by the definition of floor and ceiling}] \\
&= 2k \\
&= n && [\text{by substitution}]
\end{aligned}$$

Step 3 of 3

Case 2:

Let *n* be an odd integer. Then, $n = 2k+1$ for some integer *k*.

$$\begin{aligned}
\left\lfloor \frac{n}{2} \right\rfloor + \left\lceil \frac{n}{2} \right\rceil &= \left\lfloor \frac{2k+1}{2} \right\rfloor + \left\lceil \frac{2k+1}{2} \right\rceil && [\text{by substitution}] \\
&= \left\lfloor k + \frac{1}{2} \right\rfloor + \left\lceil k + \frac{1}{2} \right\rceil && [\text{by algebra}] \\
&= k + (k+1) && [\text{by the definition of floor and ceiling}] \\
&= 2k+1 \\
&= n && [\text{by substitution}]
\end{aligned}$$

In both possible cases, $\left\lfloor \frac{n}{2} \right\rfloor + \left\lceil \frac{n}{2} \right\rceil = n.$

Chapter 4.6, Problem 31E

Problem

Prove the statement

For every integer n, $\left\lfloor \frac{\left\lfloor \frac{n}{2} \right\rfloor}{3} \right\rfloor = \left\lfloor \frac{n}{6} \right\rfloor$.

Step-by-step solution

Step 1 of 5

Consider the following statement.

For every integer n, $\left\lfloor \frac{\left\lfloor \frac{n}{2} \right\rfloor}{3} \right\rfloor = \left\lfloor \frac{n}{6} \right\rfloor$.

The main objective of this given problem is to prove the above statement.

Step 2 of 5

Proof:

Let n is any integer.

Consider two cases n as an even number and n as an odd number.

Case 1:

Let $n \in \mathbb{Z}$. Then, $n = 2k$ for some $k \in \mathbb{Z}$.

$$\begin{aligned}
\left\lfloor \frac{\left\lfloor \frac{n}{2} \right\rfloor}{3} \right\rfloor &= \left\lfloor \frac{\left\lfloor \frac{2k}{2} \right\rfloor}{3} \right\rfloor && [\text{by substitution}] \\
&= \left\lfloor \frac{\lfloor k \rfloor}{3} \right\rfloor && [\text{by algebra}] \\
&= \left\lfloor \frac{k}{3} \right\rfloor && [\text{by the definition of floor}] \\
&= \left\lfloor \frac{\frac{n}{2}}{3} \right\rfloor && [\text{by substitution}] \\
&= \left\lfloor \frac{n}{6} \right\rfloor && [\text{by algebra}]
\end{aligned}$$

Step 3 of 5

Case 2:

By the quotient-remainder theorem with divisor equal to 6,

$n = 6k$ or $n = 6k+1$ or $n = 6k+2$ or $n = 6k+3$ or $n = 6k+4$ or $n = 6k+5$ for some $k \in \mathbb{Z}$.

Out of all the above possibilities there are three possibilities in case n is odd:

$n = 6k+1$ or $n = 6k+3$ or $n = 6k+5$ for some $k \in \mathbb{Z}$.

Case (i) $n = 6k+1$, for some $k \in \mathbb{Z}$.

$$\begin{aligned}
\left\lfloor \frac{\left\lfloor \frac{n}{2} \right\rfloor}{3} \right\rfloor &= \left\lfloor \frac{\left\lfloor \frac{6k+1}{2} \right\rfloor}{3} \right\rfloor && [\text{by substitution}] \\
&= \left\lfloor \frac{\left\lfloor 3k + \frac{1}{2} \right\rfloor}{3} \right\rfloor && [\text{by algebra}] \\
&= \left\lfloor \frac{3k}{3} \right\rfloor && [\text{by the definition of floor}] \\
&= \lfloor k \rfloor && [\text{by substitution}] \\
&= k && [\text{by the definition of floor}]
\end{aligned}$$

Observe the following,

$$\begin{aligned}
\left\lfloor \frac{n}{6} \right\rfloor &= \left\lfloor \frac{6k+1}{6} \right\rfloor && [\text{by substitution}] \\
&= \left\lfloor k + \frac{1}{6} \right\rfloor && [\text{by algebra}] \\
&= \lfloor k \rfloor && [\text{by the definition of floor}] \\
&= k && [\text{by the definition of floor}]
\end{aligned}$$

Thus $\left\lfloor \frac{\left\lfloor \frac{n}{2} \right\rfloor}{3} \right\rfloor = \left\lfloor \frac{n}{6} \right\rfloor$, since both their RHS are the same.

Step 4 of 5

Case (ii) $n = 6k+3$, for some $k \in \mathbb{Z}$.

$$\begin{aligned}
\left\lfloor \frac{\left\lfloor \frac{n}{2} \right\rfloor}{3} \right\rfloor &= \left\lfloor \frac{\left\lfloor \frac{6k+3}{2} \right\rfloor}{3} \right\rfloor && [\text{by substitution}] \\
&= \left\lfloor \frac{\left\lfloor 3k + \frac{3}{2} \right\rfloor}{3} \right\rfloor && [\text{by algebra}] \\
&= \left\lfloor \frac{\left\lfloor 3k + 1 + \frac{1}{2} \right\rfloor}{3} \right\rfloor && [\text{by algebra}] \\
&= \left\lfloor \frac{3k+1}{3} \right\rfloor && [\text{by the definition of floor}] \\
&= \left\lfloor k + \frac{1}{3} \right\rfloor && [\text{by algebra}] \\
&= \lfloor k \rfloor && [\text{by the definition of floor}] \\
&= k && [\text{by the definition of floor}]
\end{aligned}$$

Observe the following,

$$\begin{aligned}
\left\lfloor \frac{n}{6} \right\rfloor &= \left\lfloor \frac{6k+3}{6} \right\rfloor && [\text{by substitution}] \\
&= \left\lfloor k + \frac{3}{6} \right\rfloor && [\text{by algebra}] \\
&= \lfloor k \rfloor && [\text{by the definition of floor}] \\
&= k && [\text{by the definition of floor}]
\end{aligned}$$

Thus $\left\lfloor \frac{\left\lfloor \frac{n}{2} \right\rfloor}{3} \right\rfloor = \left\lfloor \frac{n}{6} \right\rfloor$, since both their RHS are the same.

Step 5 of 5

Case (iii) $n = 6k+5$, for some $k \in \mathbb{Z}$.

$$\begin{aligned}
\left\lfloor \frac{\left\lfloor \frac{n}{2} \right\rfloor}{3} \right\rfloor &= \left\lfloor \frac{\left\lfloor \frac{6k+5}{2} \right\rfloor}{3} \right\rfloor && [\text{by substitution}] \\
&= \left\lfloor \frac{\left\lfloor 3k + \frac{5}{2} \right\rfloor}{3} \right\rfloor && [\text{by algebra}] \\
&= \left\lfloor \frac{\left\lfloor 3k + 2 + \frac{1}{2} \right\rfloor}{3} \right\rfloor && [\text{by algebra}] \\
&= \left\lfloor \frac{3k+2}{3} \right\rfloor && [\text{by the definition of floor}] \\
&= \left\lfloor k + \frac{2}{3} \right\rfloor && [\text{by algebra}] \\
&= \lfloor k \rfloor && [\text{by the definition of floor}] \\
&= k && [\text{by the definition of floor}]
\end{aligned}$$

Observe the following,

$$\begin{aligned}
\left\lfloor \frac{n}{6} \right\rfloor &= \left\lfloor \frac{6k+5}{6} \right\rfloor && [\text{by substitution}] \\
&= \left\lfloor k + \frac{5}{6} \right\rfloor && [\text{by algebra}] \\
&= \lfloor k \rfloor && [\text{by the definition of floor}] \\
&= k && [\text{by the definition of floor}]
\end{aligned}$$

Thus $\left\lfloor \frac{\left\lfloor \frac{n}{2} \right\rfloor}{3} \right\rfloor = \left\lfloor \frac{n}{6} \right\rfloor$, since both their RHS are the same.

In all the possible cases, $\left\lfloor \frac{\left\lfloor \frac{n}{2} \right\rfloor}{3} \right\rfloor = \left\lfloor \frac{n}{6} \right\rfloor$.

Chapter 4.6, Problem 32E

Problem

Prove the statement

For every integer n, $\left\lceil \frac{\left\lceil \frac{n}{2} \right\rceil}{3} \right\rceil = \left\lceil \frac{n}{6} \right\rceil$.

Step-by-step solution

Step 1 of 5

Consider the followingstatement.

For every integer$n$, $\left\lceil \frac{\left\lceil \frac{n}{2} \right\rceil}{3} \right\rceil = \left\lceil \frac{n}{6} \right\rceil$.

The objective is to prove the above statement.

Step 2 of 5

Proof: Let $n \in \mathbb{N}$.

There are two cases in this problem.

Case 1 : Let n is even. Then, $n = 2k$ for some $k \in \mathbb{Z}$.

$$\begin{aligned}
\left\lceil \frac{\left\lceil \frac{n}{2} \right\rceil}{3} \right\rceil &= \left\lceil \frac{\left\lceil \frac{2k}{2} \right\rceil}{3} \right\rceil && \text{[by substitution]} \\
&= \left\lceil \frac{\lceil k \rceil}{3} \right\rceil && \text{[by algebra]} \\
&= \left\lceil \frac{k}{3} \right\rceil && \text{[by the definition of ceiling]} \\
&= \left\lceil \frac{\frac{n}{2}}{3} \right\rceil && \text{[by substitution]} \\
&= \left\lceil \frac{n}{6} \right\rceil && \text{[by algebra]}
\end{aligned}$$

Step 3 of 5

Case 2:

By the quotient-remainder theorem with divisor equal to 6,

$n = 6k$ or $n = 6k+1$ or $n = 6k+2$ or $n = 6k+3$ or $n = 6k+4$ or $n = 6k+5$ for some $k \in \mathbb{Z}$.

Out of all the above possibilities there are three possibilities in case n is odd:

$n = 6k+1$ or $n = 6k+3$ or $n = 6k+5$ for some $k \in \mathbb{Z}$.

Case (i) $n = 6k+1$, for some $k \in \mathbb{Z}$.

$$\begin{aligned}
\left\lceil \frac{\left\lceil \frac{n}{2} \right\rceil}{3} \right\rceil &= \left\lceil \frac{\left\lceil \frac{6k+1}{2} \right\rceil}{3} \right\rceil && \text{[by substitution]} \\
&= \left\lceil \frac{\left\lceil 3k + \frac{1}{2} \right\rceil}{3} \right\rceil && \text{[by algebra]} \\
&= \left\lceil \frac{\lceil 3k+1 \rceil}{3} \right\rceil && \text{[by the definition of ceiling function]} \\
&= \left\lceil k + \frac{1}{3} \right\rceil && \text{[by substitution]} \\
&= k+1 && \text{[by the definition of ceiling function]}
\end{aligned}$$

Observe the following,

$$\begin{aligned}
\left\lceil \frac{n}{6} \right\rceil &= \left\lceil \frac{6k+1}{6} \right\rceil && \text{[by substitution]} \\
&= \left\lceil k + \frac{1}{6} \right\rceil && \text{[by algebra]} \\
&= \lceil k+1 \rceil && \text{[by the definition of ceiling]} \\
&= k+1 && \text{[by the definition of ceiling]}
\end{aligned}$$

Thus $\left\lceil \frac{\left\lceil \frac{n}{2} \right\rceil}{3} \right\rceil = \left\lceil \frac{n}{6} \right\rceil$, since both their RHS are the same.

Step 4 of 5

Case (ii) $n = 6k+3$ for some $k \in \mathbb{Z}$.

$$\begin{aligned}
\left\lceil \frac{\left\lceil \frac{n}{2} \right\rceil}{3} \right\rceil &= \left\lceil \frac{\left\lceil \frac{6k+3}{2} \right\rceil}{3} \right\rceil && \text{[by substitution]} \\
&= \left\lceil \frac{\left\lceil 3k + \frac{3}{2} \right\rceil}{3} \right\rceil && \text{[by algebra]} \\
&= \left\lceil \frac{\left\lceil 3k + 1 + \frac{1}{2} \right\rceil}{3} \right\rceil && \text{[by algebra]} \\
&= \left\lceil \frac{3k+2}{3} \right\rceil && \text{[by the definition of ceiling]} \\
&= \left\lceil k + \frac{2}{3} \right\rceil && \text{[by algebra]} \\
&= k+1 && \text{[by the definition of ceiling]}
\end{aligned}$$

Observe the following,

$$\begin{aligned}
\left\lceil \frac{n}{6} \right\rceil &= \left\lceil \frac{6k+3}{6} \right\rceil && \text{[by substitution]} \\
&= \left\lceil k + \frac{3}{6} \right\rceil && \text{[by algebra]} \\
&= k+1 && \text{[by the definition of ceiling]}
\end{aligned}$$

Thus $\left\lceil \frac{\left\lceil \frac{n}{2} \right\rceil}{3} \right\rceil = \left\lceil \frac{n}{6} \right\rceil$, since both their RHS are the same.

Step 5 of 5

Case (iii) $n = 6k+5$ for some $k \in \mathbb{Z}$.

$$\begin{aligned}
\left\lceil \frac{\left\lceil \frac{n}{2} \right\rceil}{3} \right\rceil &= \left\lceil \frac{\left\lceil \frac{6k+5}{2} \right\rceil}{3} \right\rceil && \text{[by substitution]} \\
&= \left\lceil \frac{\left\lceil 3k + \frac{5}{2} \right\rceil}{3} \right\rceil && \text{[by algebra]} \\
&= \left\lceil \frac{\left\lceil 3k + 2 + \frac{1}{2} \right\rceil}{3} \right\rceil && \text{[by algebra]} \\
&= \left\lceil \frac{3k+3}{3} \right\rceil && \text{[by the definition of ceiling]} \\
&= \lceil k+1 \rceil && \text{[by algebra]} \\
&= k+1 && \text{[by the definition of ceiling]}
\end{aligned}$$

Observe the following,

$$\begin{aligned}
\left\lceil \frac{n}{6} \right\rceil &= \left\lceil \frac{6k+5}{6} \right\rceil && \text{[by substitution]} \\
&= \left\lceil k + \frac{5}{6} \right\rceil && \text{[by algebra]} \\
&= k+1 && \text{[by the definition of ceiling]}
\end{aligned}$$

Thus $\left\lceil \frac{\left\lceil \frac{n}{2} \right\rceil}{3} \right\rceil = \left\lceil \frac{n}{6} \right\rceil$, since both their RHS are the same.

In all the possible cases , $\left\lceil \frac{\left\lceil \frac{n}{2} \right\rceil}{3} \right\rceil = \left\lceil \frac{n}{6} \right\rceil$.

For every integer$n$, $\left\lceil \frac{\left\lceil \frac{n}{2} \right\rceil}{3} \right\rceil = \left\lceil \frac{n}{6} \right\rceil$.

Chapter 4.6, Problem 33E

Problem

Prove the statement

A necessary and sufficient condition for an integer n to be divisible by a nonzero integer d is that $n = \lfloor n/d \rfloor \cdot d$. In other words, for every integer n and nonzero integer d,

a. if $d|n$, then $n = \lfloor n/d \rfloor \cdot d$.

---

b. if $n = \lfloor n/d \rfloor \cdot d$ then $d|n$.

Step-by-step solution

Step 1 of 4

a.

Consider the given statement.

For every integer n, if $d \mid n$, then $n = \left\lfloor \frac{n}{d} \right\rfloor \cdot d$.

The main objective of this given problem is to prove the given statement.

Step 2 of 4

Proof:

Let n and d are any integers such that $d \neq 0$ and $d \mid n$.

By the definition, $n = d \cdot k$ for some $\square$.

$$\begin{aligned} \left\lfloor \frac{n}{d} \right\rfloor &= \left\lfloor \frac{d \cdot k}{d} \right\rfloor && [\text{by substitution}] \\ &= \lfloor k \rfloor && [\text{by algebra}] \\ &= k && [\text{by the definition of floor}] \end{aligned}$$

Also observe the following.

$$\begin{aligned} \frac{n}{d} &= \frac{d \cdot k}{d} && [\text{by substitution}] \\ &= k && [\text{by algebra}] \end{aligned}$$

Observe from the above equations that $\left\lfloor \frac{n}{d} \right\rfloor = k = \frac{n}{d}$.

Thus, conclude the following.

$$\left\lfloor \frac{n}{d} \right\rfloor = \frac{n}{d}$$

$$n = d \cdot \left\lfloor \frac{n}{d} \right\rfloor$$

Step 3 of 4

b.

Consider the given statement.

For every integer n and nonzero integer d, if $n = \left\lfloor \frac{n}{d} \right\rfloor \cdot d$ then $d \mid n$.

The main objective of this given problem is to prove the given statement.

Step 4 of 4

Proof:

Let $n, d \in \square$ such that $d \neq 0$ and $n = \left\lfloor \frac{n}{d} \right\rfloor \cdot d$.

By the definition of floor, $\left\lfloor \frac{n}{d} \right\rfloor$ is an integer.

Observe the following.

$$\begin{aligned} n &= \left\lfloor \frac{n}{d} \right\rfloor \cdot d \\ &= k \cdot d, \text{ where } k = \left\lfloor \frac{n}{d} \right\rfloor, \text{ any integer} \end{aligned}$$

By the definition of divisibility, $d \mid n$.

Chapter 4.7, Problem 1E

Problem

Fill in the blanks in the following proof by contradiction that there is no least positive real number.

Proof: Suppose not. That is, suppose that there is a least positive real number *x*. *[We must deduce* (a).*]* Consider the number *x*/2. Since *x* is a positive real number, *x*/2 is also (b). In addition, we can deduce that *x/2 by multiplying both sides of the inequality 1<2 by (c) and dividing (d). Hence x/2 is a positive real number that is less than the least positive real number. This is a (e) [Thus the supposition is false, and so there is no least positive real number.]*

Step-by-step solution

Step 1 of 2

The object is to prove the statement by 'proof by contradiction'.

Given statement is, there is no least positive real number.

Proof:

Suppose not. That is, suppose that there is a least positive real number *x* [*We must deduce* **(a) a contradiction**]. Consider the number $\frac{x}{2}$. Since *x* is a positive real number, $\frac{x}{2}$ is also **(b) a positive real number**. In addition we can deduce that $\frac{x}{2} < x$ by multiplying both sides of the inequality 1 < 2 by **(c) *x*** and dividing **(d) both sides by 2**.

Hence $\frac{x}{2}$ is a positive real number that is less than the least positive real number. This is a **(e) contradiction**.[*Thus the supposition is false, and so there is no least positive real number.*]

Step 2 of 2

ANSWER:

(a) a contradiction
(b) a positive real number
(c) x
(d) both sides by 2
(e) contradiction

Chapter 4.7, Problem 2E

Problem

Is $\frac{1}{0}$ an irrational number? Explain.

Step-by-step solution

Step 1 of 1

$\frac{1}{0}$ is neither rational nor irrational

In fact, it is not defined

Chapter 4.7, Problem 3E

Problem

Use proof by contradiction to show that for all integers n, $3n + 2$ is not divisible by 3.

Step-by-step solution

Step 1 of 2

Consider the following statement:

For all integers n, $3n+2$ is not divisible by 3.

Objective is to use the contradiction method to show that $3n+2$ is not divisible by 3 for all integers n.

Take the contradiction of the statement.

Suppose it is not true.

That is, suppose that there is an integer n such that $3n+2$ is divisible by 3.

Then, $3n+2=3m$, for some integer m.

Step 2 of 2

Consider the equation, $3n+2=3m$.

Subtract $3n$ from both sides.

$$3n+2-3n=3m-3n;$$

$$2=3(m-n);$$

$$\frac{2}{2}=\frac{3(m-n)}{2};$$

$$1=\frac{3}{2}(m-n)$$

By the definition of divisibility, if a and b are positive integers and $\frac{a}{b}$, then $a \le b$.

It follows that 3 and 2 are positive integers and $\frac{3}{2}$, then $3 \le 2$.

This is a contradiction to the fact that $3 > 2$.

Thus, for all integers n, $3n+2$ is not divisible by 3.

Chapter 4.7, Problem 4E

Problem

Use proof by contradiction to show that for all integers *m*, 7*m* + 4 is not divisible by 7.

Step-by-step solution

Step 1 of 1

[We take the negation of the statement and suppose it to be true]

Suppose it is not true

That is, suppose that there is an integer m, such that $7m+4$ is divisible by 7

[We must derive a contradiction]

Then,

$7m+4=7k$, for some integer k

Subtracting $7m$ from both sides gives

$7m+4-7m=7k-7m$

$\Rightarrow 4=7(k-m)$

So by the definition of divisibility $7 \mid 4$

However, we know that if *a* and *b* are positive integers, and $a \mid b$, then $a \leq b$

It follows that $7 \mid 4 \Rightarrow 7 \leq 4$

Which is a contradiction to the fact that $7>4$

Thus, for all integers m, $7m+4$ is not divisible by 7

Chapter 4.7, Problem 5E

Problem

Carefully formulate the negations of the statement. Then prove the statement by contradiction.

Exercise

There is no greatest even integer.

Step-by-step solution

Step 1 of 1

Negation of the statement

There is a greatest even integer

Proof of the statement

[We take the negation of the statement and suppose it to be true]

Suppose it is not true. That is, there is a greatest even integer, call it X

Then, X is an even integer and $X \geq x$, for every even integer x

[We must deduce a contradiction]

Let $y = X + 2$

Then y is an even integer, since it is a sum of even integers and $y > X$

Since $y = X + 2$, this contradicts the supposition that $X \geq x$, for every even integer x

Thus, there is no greatest even integer

Chapter 4.7, Problem 6E

Problem

Carefully formulate the negations of the statement. Then prove the statement by contradiction.

Exercise

There is no greatest negative real number.

Step-by-step solution

Step 1 of 3

Consider the statement:

'There is no greatest negative real number'.

The objective is to write the negation of the given statement, and then prove the original statement by contradiction method.

The negation of the statement is as follows:

$\boxed{\text{'There is a greatest negative real number'}}$.

Step 2 of 3

Now, prove the statement 'There is no greatest negative real number' by contradiction method as follows.

Take the negation of the statement and suppose it to be true. That is, there is a greatest negative real number, call it X.

Then $X \geq x$ for every negative real number *x*, which means that there is no negative real number greater than X.

Step 3 of 3

Let $y = \frac{X}{2}$. Then, y is a negative real number, since a negative divided by a positive is always negative.

Notice that $y > X$ since $y = \frac{X}{2}$, and X is negative.

But, this contradicts the supposition that $X \geq x$ for every negative real number *x*; therefore, the original statement is correct.

Hence, the statement: 'There is no greatest negative real number' is proved.

Chapter 4.7, Problem 7E

Problem

Carefully formulate the negations of the statement. Then prove the statement by contradiction.

Exercise

There is no least positive rational number.

Step-by-step solution

Step 1 of 2

The objective is to write the negation of "there is no least positive rational number" and then prove the statement by contradiction.

The negation of the statement is:

There is a least positive rational number.

Step 2 of 2

Now prove the statement "there is no least positive rational number" by contradiction.

Suppose there is a least positive rational number say N.

Then, $0 < N < n$ for every rational number n.

Let $M = \frac{N}{2}$.

So, M is a rational number as the denominator is nonzero.

Implies that, $0 < M < N < n$.

This contradicts the fact that N is the least positive rational number.

Implies supposition is false.

Hence, there is no least positive rational number.

Chapter 4.7, Problem 8E

Problem

Fill in the blanks for the following proof that the difference of any rational number and any irrational number is irrational.

Proof: Suppose not. That is, suppose that there exist (a) x and (b) y such that $x - y$ is rational. By definition of rational, there exist integers a, b, c, and d with $b \neq 0$ and $d \neq 0$ so that x = (c) and $x - y$ = (d). By substitution,

$$\frac{a}{b} - y = \frac{c}{d}$$

Adding y and subtracting $\frac{c}{d}$ on both sides gives

$$\begin{aligned} y &= (c) \\ &= \frac{ad}{bd} - \frac{bc}{bd} \quad \text{by algebra.} \\ &= \frac{ad - bc}{bd} \end{aligned}$$

Now both $ad - bc$ and bd are integers because products and differences of (f) are (g). And $bd \neq 0$ by the (h). Hence y is a ratio of integers with a nonzero denominator, and thus y is (i) by definition of rational. We therefore have both that y is irrational and that y is rational, which is a contradiction. *[Thus the supposition is false and the statement to be proved is true.]*

Step-by-step solution

Step 1 of 3

Given statement is "Prove that the difference of any rational number and any irrational number is irrational"

Proof:

Suppose not. That is, suppose that there exist **(a) a rational number** x and **(b)an irrational number** y such that $x - y$ is rational. By definition of rational, there exists integers a, b, c and d with $d \neq 0$ so that x = (c) $\frac{a}{b}$ and $x - y =$(d) $\frac{c}{d}$. By substitution,

$$\frac{a}{b} - y = \frac{c}{d}$$

Step 2 of 3

Adding y and subtracting $\frac{c}{d}$ on both sides gives

$$\begin{aligned} y &= \frac{a}{b} - \frac{c}{d} \\ &= \frac{ad}{bd} - \frac{bc}{bd} \\ &= \frac{ad - bc}{bd} \qquad \text{by algebra.} \end{aligned}$$

Step 3 of 3

Now both $ad - bc$ and bd are integers because products and differences of **(f) integers** are **(g) integers**. And $bd \neq 0$ by the **(h)zero product property**. Hence y is a ration of integers with a nonzero denominator, and thus y is **(i) a rational** by definition of rational, which is a contradiction.

Chapter 4.7, Problem 9E

Problem

a. When asked to prove that the difference of any irrational number and any rational number is irrational, a student began, "Suppose not. That is, suppose the difference of any irrational number and any rational number is rational." What is wrong with beginning the proof in this way? *(Hint:* Review the answer to exercise.)

b. Prove that the difference of any irrational number and any rational number is irrational.

Exercise

The proposed negation is not correct. Consider the given statement: "The sum of any two irrational numbers is irrational." For this to be false means that it is possible to find at least one pair of irrational numbers whose sum is rational. On the other hand, the negation proposed in the exercise ("The sum of any two irrational numbers is rational") means that given *any* two irrational numbers, their sum is rational. This is a much stronger statement than the actual negation: The truth of this statement implies the truth of the negation (assuming that there are at least two irrational numbers), but the negation can be true without having this statement be true.

Correct negation: There are at least two irrational numbers whose sum is rational.

Or: The sum of some two irrational numbers is rational.

Step-by-step solution

Step 1 of 4

(a)

Consider the statement:

The difference of any irrational number and any rational number is irrational.

The negation of the given statement:

There exists an irrational number and a rational number such that the difference of those is rational.

Step 2 of 4

The objective is to identify the mistake of this proof.

The mistake in this proof occurs in the negation statement where the negation written by the student is incorrect.

Instead of being existential, it is a universal quantifier.

One example of a rational number and an irrational number whose difference is rational is sufficient to disprove the given statement.

However, to prove the given statement, it is necessary to show that there is no rational number and no irrational number whose difference is rational.

Step 3 of 4

(b)

Objective is to prove that the difference of any rational and any irrational numbers is irrational.

To prove this statement by using contradiction method:

Take the negation of the statement and suppose there exist an irrational number x and a rational number y , such that $x-y$ is rational.

Derive a contradiction.

By the definition of rational, $y=\frac{a}{b}$ and $x-y=\frac{c}{d}$, for some integers *a*, *b*, *c*, and *d*, with $b\neq 0$ and $d\neq 0$.

Step 4 of 4

Next, substitute the value of y in $x-y=\frac{c}{d}$.

$$\begin{aligned} x-y&=\frac{c}{d}\\ x-\frac{a}{b}&=\frac{c}{d}\\ x&=\frac{c}{d}+\frac{a}{b}\\ &=\frac{ad+bc}{bd} \end{aligned}$$

Now, $\frac{c}{d}$ and $\frac{a}{b}$ are rational numbers, and the sum of two rational numbers is rational.

Thus, x is rational number.

This contradicts the supposition that x is irrational.

Thus, for all real numbers, if *x* is irrational and *y* is rational, then $x-y$ is irrational.

Chapter 4.7, Problem 10E

Problem

Let S be the statement: For all positive real numbers r and s, $\sqrt{r+s} \neq \sqrt{r}+\sqrt{s}$. Statement S is true, but the following "proof" is incorrect. Find the mistake.

"**Proof by contradiction:** Suppose not. That is, suppose that for all positive real numbers r and s, $\sqrt{r+s} = \sqrt{r}+\sqrt{s}$. This means that the equation will be true no matter what positive real numbers are substituted for r and s. So let $r = 9$ and $s = 16$. Then r and s are positive real numbers and

$$\sqrt{r+s} = \sqrt{9+16} = \sqrt{25} = 5$$

whereas

$\sqrt{r} + \sqrt{s} = \sqrt{9} + \sqrt{16} = 3 + 4 = 7$.

Since $5 \neq 7$, we have that $\sqrt{r+s} \neq \sqrt{r}+\sqrt{s}$, which contradicts the supposition that $\sqrt{r+s} = \sqrt{r}+\sqrt{s}$. This contradiction shows that the supposition is false, and hence statement S is true."

Step-by-step solution

Step 1 of 2

Consider the given proof for the statement.

The objective is to find the mistake in the proof

Step 2 of 2

The mistake is that the negation for S that was used in the "proof" is incorrect. Thus deducing a contradiction from it fails to prove that S is true.

The actual negation is "There exists two rational numbers r and s such that $\sqrt{r+s} = \sqrt{r}+\sqrt{s}$."

Chapter 4.7, Problem 11E

Problem

Let T be the statement: The sum of any two rational numbers is rational. Then T is true, but the following "proof" is incorrect. Find the mistake.

"**Proof by contradiction:** Suppose not. That is, suppose that the sum of any two rational numbers is not rational. This means that no matter what two rational numbers are chosen their sum is not rational. Now both 1 and 3 are rational because 1 = 1/1 and 3 = 3/1, and so both are ratios of integers with a nonzero denominator. Hence, by a supposition, the sum of 1 and 3, which is 4, is not rational. But 4 is rational because 4 = 4/1, which is a ratio of integers with a nonzero denominator. Hence 4 is both rational and not rational, which is a contradiction. This contradiction shows that the supposition is false, and hence statement T is true."

Step-by-step solution

Step 1 of 2

Consider the given proof for the statement.

The objective is to find the mistake in the proof.

Step 2 of 2

The mistake is that the negation for T that was used in the "proof" is incorrect. Thus deducing a contradiction from it fails to prove that S is true.

The actual negation is "There exist two rational numbers whose sum is not rational."

Chapter 4.7, Problem 12E

Problem

Let *R* be the statement: The square root of any irrational number is irrational.

a. Write a negation for *R*.

---

b. Prove *R* by contradiction.

Step-by-step solution

Step 1 of 3

Consider the given statement.

R: "The square root of any irrational number is irrational."

Step 2 of 3

a.

The objective is to find the negation of the given statement.

The negation is given follows.

"There exists an irrational number whose square root is rational."

Step 3 of 3

b.

The objective is to prove given statement by contradiction.

Proof: Assume that there exists $x \in \mathbb{R} - \mathbb{Q}$ such that $\sqrt{x}$ is rational.

By definition of rational, $\sqrt{x} = \frac{a}{b}$ for some integers *a* and *b* with $b \neq 0$. Then

$$\left(\sqrt{x}\right)^2 = \left(\frac{a}{b}\right)^2$$

$$x = \frac{a^2}{b^2}$$

Observe that that both a^2 and b^2 are products of integers and thus are integers, and b^2 is nonzero.

Thus *x* is rational, and by assumption, we get that *x* is both rational and irrational, which is a contradiction.

Hence our assumption is false and thus the statement *R* is true.

Chapter 4.7, Problem 13E

Problem

Let *S* be the statement: The product of any irrational number and any nonzero rational number is irrational.

a. Write a negation for *S*.

---

b. Prove *S* by contradiction.

Step-by-step solution

Step 1 of 3

Consider the given statement.

S: "The product of any irrational number and any nonzero rational number is irrational."

Step 2 of 3

a.

The objective is to find the negation of the given statement.

The negation of the given statement is as follows.

That is "<u>There exists an irrational number and a nonzero rational number whose product is rational</u>."

Step 3 of 3

b.

The objective is to prove given statement by contradiction.

Proof: Assume that there exists a nonzero number $x \in \mathbb{Q}$ and $y \in \mathbb{R} - \mathbb{Q}$ such that *xy* is rational.

By definition of rational, $x = \frac{a}{b}$ and $xy = \frac{c}{d}$ for some integers *a, b, c* and *d* with $b \neq 0$ and $d \neq 0$. Since $a \neq 0$, as *x* is nonzero. Then

$$xy = \frac{a}{b} y = \frac{c}{d}$$

$$\begin{aligned} y &= \frac{c}{d} \div \frac{a}{b} \\ &= \frac{c}{d} \times \frac{b}{a} \\ &= \frac{cb}{da} \end{aligned}$$

Observe that that *cb* and *da* are integers, as the products of integers are integers, and $da \neq 0$ as $d \neq 0$ and $a \neq 0$.

Thus *y* is rational, and since it follows from our assumption that *y* is both rational and irrational, which is a contradiction.

Hence our assumption is false and thus the statement *S* is true.

Chapter 4.7, Problem 14E

Problem

Let *T* be the statement: For every integer *a*, if *a mod* 6 = 3, then *a mod* 3 ≠ 2.

a. Write a negation for *T*.

---

b. Prove *T* by contradiction.

Step-by-step solution

Step 1 of 3

Consider the given statement.

T: "For every integer *a*, if $a \bmod 6 = 3$, then $a \bmod 3 \neq 2$."

Step 2 of 3

a.

The main objective is to find the negation of the given statement.

The negation of the given statement is as follows.

It is not case that for every integer *a*, if $a \bmod 6 = 3$, then $a \bmod 3 \neq 2$.

That is "There exists an integer *a* such that $a \bmod 6 = 3$ and $a \bmod 3 = 2$."

Step 3 of 3

b.

The main objective is to prove given statement by contradiction.

Proof by contradiction:

Suppose not. That is, assume that there exists an integer *a* such that $a \bmod 6 = 3$ and $a \bmod 3 = 2$.

By definition of mod, there exists integers *r* and *s* such that $a = 6r + 3$ and $a = 3s + 2$

$$6r + 3 = 3s + 2$$
$$3s - 6r = 3 - 2$$
$$3(s - 2r) = 1$$
$$s - 2r = \frac{1}{3}$$

Observe that that $s - 2r$ is an integer, as the products and differences of integers are integers.

But $s - 2r = \frac{1}{3}$ is impossible as $\frac{1}{3}$ is not an integer.

Hence, our assumption is false and thus the statement *T* is true.

Chapter 4.7, Problem 15E

Problem

Do there exist integers *a*, *b*, and *c* such that *a*, *b*, and *c* are all odd and *a*2 + *b*2 = *c*2? Prove your answer.

Step-by-step solution

Step 1 of 4

The objective is to find whether there exist $a,b,c \in \mathbb{Z}$ such that *a*, *b*,

and *c* are all odd and $a^2+b^2=c^2$ and then prove the answer.

There are no odd integers *a*, *b*, and *c* such that *a*, *b*, and *c* are all odd and $a^2+b^2=c^2$.

Step 2 of 4

Facts Used:

(1) A number *n* is said to be odd if it is of the form $n=2k+1$ for some integer *k*.

(2) The products, sums and differences of integers are integers.

Step 3 of 4

Proof by contradiction: Suppose not. That is, assume that there exists odd integers *a*, *b*, and *c* such that *a*, *b*, and *c* are all odd and $a^2+b^2=c^2$.

By definition of odd, $a=2k+1,\ b=2m+1$ and $c=2n+1$ for some integers *k*, *m* and *n*.

$$c^2=a^2+b^2$$
$$(2n+1)^2=(2k+1)^2+(2m+1)^2$$
$$4n^2+4n+1=4k^2+4k+1+4m^2+4m+1$$
$$4n^2+4n+1-4k^2-4k-1-4m^2-4m=1$$

Simplify the above expression further to get,

$$4n^2+4n-4k^2-4k-4m^2-4m=1$$
$$2\left(3n^2+2n-2k^2-2k-2m^2-2m\right)=1$$
$$3n^2+2n-2k^2-2k-2m^2-2m=\frac{1}{2}$$

Step 4 of 4

Observe that that $3n^2+2n-2k^2-2k-2m^2-2m$ is an integer, as the products, sums and differences of integers are integers.

But $3n^2+2n-2k^2-2k-2m^2-2m=\frac{1}{2}$ is impossible as $\frac{1}{2}$ is not an integer.

Hence our assumption is false and thus the statement "There are no odd integers a, b, and *c* such that *a*, *b*, and *c* are all odd and $a^2+b^2=c^2$."

Chapter 4.7, Problem 16E

Problem

Prove statement by contradiction.

For all odd integers *a* and *b*, *b*2 − *a*2 ≠ 4.

(*Hint:* *b*2 − *a*2 = (*b* + *a*)(*b* − *a*) and the only way to factor 4 is either 4 = 2·2 or 4 = 4·1.)

Step-by-step solution

Step 1 of 4

Consider the given statement.

"For all odd integers *a* and *b*, $b^2 - a^2 \neq 4$."

The main objective of the problem is to prove the given statement.

Step 2 of 4

Facts Used:

(1) A number *n* is said to be odd if it is of the form $n = 2k+1$ for some integer *k*.

(2) The products, sums and differences of integers are integers.

Step 3 of 4

Proof by contradiction: Suppose not. That is, assume that there exists odd integers *a* and *b* such $b^2 - a^2 = 4$.

By definition of odd, $a = 2k+1,\ b = 2m+1$ for some integers *k* and *m*.

$$\begin{aligned} 4 &= a^2 - b^2 \\ &= (2k+1)^2 - (2m+1)^2 \\ &= (4k^2 + 4k + 1) - (4m^2 + 4m + 1) \\ &= 4k^2 + 4k + 1 - 4m^2 - 4m - 1 \end{aligned}$$

Simplify further as follows,

$$\begin{aligned} 4 &= 4k^2 + 4k - 4m^2 - 4m \\ &= 4\left((k^2 - m^2) + (k - m)\right) \\ &= 4\left((k+m)(k-m) + (k-m)\right) \\ &= 4(k-m)(k+m+1) \end{aligned}$$

Divide both sides by 4 as follows.

$$1 = (k-m)(k+m+1)$$

Step 4 of 4

Consider the 3 cases $k < m, k = m$ and $k > m$.

For $k < m$ and $k > m$,

$$k + m + 1 = \frac{1}{k-m}$$

Observe that that $k+m+1$ is an integer, as the sums of integers are integers, but $\frac{1}{k-m}$ is a rational number not an integer. An integer equal to a rational number, which is impossible.

For $k = m$,

$$1 = (k-k)(k+k+1)$$
$$1 = 0$$

which is impossible also.

Hence our assumption is false for all the possible cases and thus the given statement is true.

Chapter 4.7, Problem 17E

Problem

Prove statement by contradiction.

For all prime numbers *a*, *b*, and *c*, *a*2 + *b*2 ≠ *c*2.

Step-by-step solution

Step 1 of 4

Consider the given statement.

"For all prime numbers *a*, *b*, and *c* , $a^2+b^2 \neq c^2$."

The main objective of the problem is to prove the above statement by contradiction.

Step 2 of 4

Facts Used:

(1)A number *n* is said to be prime if it is divisible only by itself and 1 only.

(2) The products, sums and differences of integers are integers.

Step 3 of 4

Proof by contradiction: Suppose not. That is, assume that there exists prime numbers *a*, *b* and *c* such that $a^2+b^2=c^2$.

Consider the equation $a^2+b^2=c^2$.

$$\begin{aligned} a^2+b^2&=c^2\\ a^2&=c^2-b^2\\ &=(c-b)(c+b) \end{aligned}$$

Observe that $a^2>0$ and thus either $c-b=1$ or $c-b>0$. Since $c+b>0$.

For $c-b=1$, as both *c* and *b* are prime and the only possibility is $c=3$ and $b=2$. Then

$$\begin{aligned} (c-b)(c+b)&=(3-2)(3+2)\\ &=1(5)\\ &=5\\ &=a^2 \end{aligned}$$

which implies that $a=\sqrt{5}$, which is not a prime number and it contradicts our assumption.

Step 4 of 4

For $c-b>1$, as both $(c-b)>1$ and $(c+b)>1$ and *a* is prime. Thus the only positive factors of *a* are 1 and *a* itself. Also observe that $(c-b)>1$ and $(c+b)>1$ the only possibility is $c-b=c+b$. Then

$$\begin{aligned} c-b&=c+b\\ -b&=b\\ 2b&=0\\ b&=0 \end{aligned}$$

But the assumption is *b* is a prime number and 0 is not a prime number. Thus it contradicts our assumption.

Hence our assumption is false for all the possible cases and thus the given statement is true.

Chapter 4.7, Problem 18E

Problem

Prove statement by contradiction.

If *a* and *b* are rational numbers, $b \neq 0$, and *r* is an irrational number, then $a + br$ is irrational.

Step-by-step solution

Step 1 of 3

Consider the following statement.

"If *a* and *b* are rational numbers, $b \neq 0$, and *r* is an irrational number, then $a + br$ is irrational."

The objective is to prove given statement by contradiction.

Step 2 of 3

Apply the method of contradiction to prove this.

Assume that $\exists a, b(\neq 0) \in \square$,*r* is an irrational number and $a + br$ is rational.

By definition of rational,

$$a = \frac{p}{q},\ b = \frac{s}{t} \text{ and } a + br = \frac{m}{n}$$

where p, q, s, t, m and n are integers and $q \neq 0, t \neq 0$ and $n \neq 0$

Observe that it is given that *b* is nonzero, thus *s* is also nonzero.

$$a + br = \frac{p}{q} + \frac{s}{t}r = \frac{m}{n}$$

$$\frac{s}{t}r = \frac{m}{n} - \frac{p}{q}$$

$$\frac{s}{t}r = \frac{mq - pn}{nq}$$

$$r = \frac{t(mq - pn)}{nqs}$$

Step 3 of 3

Observe that $t(mq - pn)$ and nqs are integers since addition, subtraction and multiplication of integers are also integers. Also $nqs \neq 0$ since $n \neq 0, q \neq 0$ and $s \neq 0$.

Thus by the definition of rational, *r* is a rational number.

This is a contradiction to the assumption that *r* is irrational. Thus the assumption is wrong.

Therefore, the given statement is true.

Chapter 4.7, Problem 19E

Problem

Prove statement by contradiction.

For any integer *n*, *n*2 − 2 is not divisible by 4.

Step-by-step solution

Step 1 of 2

Consider the following statement.

"For any integer *n*, $n^2 - 2$ is not divisible by 4."

The objective is to prove the above statement by contradiction.

Step 2 of 2

Apply the method of contradiction to prove this.

Assume that $\exists n \in \square$ such that $n^2 - 2$ is divisible by 4

By definition, $n^2 - 2 = 4k$ where $k \in \square$.

Observe the following,

$$\begin{aligned} n^2 - 2 &= 4k \\ n^2 &= 4k + 2 \\ &= 2(2k+1) \\ &= 2m \end{aligned}$$

where $m = 2k + 1$ is any integer.

Observe that n^2 is even by the definition of divisibility. Substitute $n^2 = 2m$ in $n^2 - 2 = 4k$ as follows.

$$\begin{aligned} n^2 - 2 &= 4k \\ (2m)^2 - 2 &= 4k \\ 4m^2 &= 4k + 2 \\ 4m^2 &= 2(2k+1) \\ 2m^2 &= 2k + 1 \end{aligned}$$

Observe that m^2 is an integer and thus $2m^2$ is even. Thus by the definition of even $2k + 1$ is even, but for any integer *k*, $2k + 1$ is odd.

This is a contradiction to the fact that any integer can't be both even and odd. Thus the assumption is wrong.

Therefore, the given statement is true.

Chapter 4.7, Problem 20E

Problem

Fill in the blanks in the following proof by contraposition that for every integer *n*, if $5 \nmid n^2$ then $5 \nmid n$.

Proof (by contraposition): *[The contrapositive is: For every integer n, if* 5|*n then* 5|*n*2.*]* Suppose *n* is any integer such that __(a)__ *[We must show that* __(b)__*]* By definition of divisibility, *n* = __(c)__ for some integer *k*. By substitution, *n*2 = __(d)__ = 5(5*k*2). But 5*k*2 is an integer because it is a product of integers. Hence *n*2 = 5·(an integer), and so __(e)__ *[as was to be shown]*.

Step-by-step solution

Step 1 of 4

Consider the given theorem.

For every integer *n*, if $5 \nmid n^2$ then $5 \nmid n$.

The main objective of the problem is fill in the blanks for the proof of the given theorem.

Step 2 of 4

Facts Used:

(1)A number *n* is divisible by another number *k* if $n = kr$ for some integer *r*.

(2) The products, sums and differences of integers are integers.

Step 3 of 4

Proof (by contraposition):

Suppose *n* is any integer such that $5 \mid n$. *[We must show that* $5 \mid n^2$.*]* By definition of divisibility, $n = \underline{5k}$ for some integer *k*. By substitution, $n^2 = (5k)^2 = 5(5k^2)$. But 5*k*2 is an integer because it is a product of integers. Hence $n^2 = 5 \cdot (\text{an integer})$, and so $5 \mid n^2$

Step 4 of 4

From the above proof, the first blank can be filled by (a) $5 \mid n$, the second blank can be filled by (b) $5 \mid n^2$, the third blank can be filled by (c) $5k$, the fourth blank can be filled by (d) $(5k)^2$, and the fifth blank can be filled by (e) $5 \mid n^2$.

Chapter 4.7, Problem 21E

Problem

Consider the statement "For all integers *n*, if *n*2 is odd then *n* is odd."

a. Write what you would suppose and what you would need to show to prove this statement by contradiction.

b. Write what you would suppose and what you would need to show to prove this statement by contraposition.

Step-by-step solution

Step 1 of 5

Consider that a statement "for all integers n, if n^2 is odd than n is odd"

a.

The objective to proof the statement "for all integers n, if n^2 is odd than n is odd" by contradiction.

Step 2 of 5

Prove the given statement by contradiction as,

Proof by contradiction: Suppose the statement is not true.

That is, suppose there is an integer n such that n^2 is odd and n is even.

And, n is not odd, it is even,

Thus by definition of even, $n = 2k$ for some integer k.

By substitution and algebra,

$$\begin{aligned} n^2 &= (2k)^2 \\ &= 4k^2 \end{aligned}$$

So, $n^2 = 4(\text{integer})^2$. And thus by definition of even, n^2 is even.

Therefore, n^2 is both even and odd.

Step 3 of 5

Theorem: there is no integer that is both even and odd.

Step 4 of 5

From the above theorem there is no number n^2 both even and odd.

This supposition leads logically to a contradiction.

Therefore, the statement "for all integers n, if n^2 is odd than n is odd" is **true**.

Step 5 of 5

b.

The objective to proof the statement "for all integers n, if n^2 is odd than n is odd"

By contraposition as,

Proof by contraposition:

Suppose n is any integer such that n is not odd or n is even.

Now, need to show that n^2 is not odd.

So, by definition of even, $n = 2k$ for some integer k.

By substitution and algebra,

$$\begin{aligned} n^2 &= (2k)^2 \\ &= 4k^2 \end{aligned}$$

So, $n^2 = 4(\text{integer})^2$. And thus by definition of even, n^2 is even.

It leads to the conclusion that n is even.

Chapter 4.7, Problem 22E

Problem

Consider the statement "For all real numbers *r*, if *r*2 is irrational then *r* is irrational."

a. Write what you would suppose and what you would need to show to prove this statement by contradiction.

b. Write what you would suppose and what you would need to show to prove this statement by contraposition.

Step-by-step solution

Step 1 of 2

a.

The objective is to prove the statement by contradiction.

The statement is as follows.

"For any real number r, if r^2 is irrational and r is irrational."

Proof by contradiction: Suppose not.

Suppose there is a real number r such that r^2 is irrational and r is rational.

Let, a and b are integers.

By definition of rational, $r = \frac{a}{b}$ with $b \neq 0$.

Now squaring on both side of the above equation,

$$(r)^2 = \left(\frac{a}{b}\right)^2$$

$$r^2 = \frac{a^2}{b^2}$$

But a^2 and b^2 are both products of integers and so they are integers.

And b^2 is nonzero by the zero product property.

Thus, by definition of rational, $\frac{a^2}{b^2}$ is rational.

So, it follows that r^2 is rational.

But at first it is mentioned that r^2 is irrational.

So, the statement is a contradiction.

Step 2 of 2

b.

Proof by contraposition: Suppose r is a real number such that r is not irrational.

Let, a and b are integers.

By definition of rational, $r = \frac{a}{b}$ with $b \neq 0$.

Now squaring on both side of the above equation,

$$(r)^2 = \left(\frac{a}{b}\right)^2$$

$$r^2 = \frac{a^2}{b^2}$$

But a^2 and b^2 are both products of integers and so they are integers.

And b^2 is nonzero by the zero product property.

Thus, by definition of rational, $\frac{a^2}{b^2}$ is rational.

So, it follows that r^2 is rational.

Chapter 4.7, Problem 23E

Problem

Prove the statement in two ways: (a) by contraposition and (b) by contradiction.

The negative of any irrational number is irrational.

Step-by-step solution

Step 1 of 5

Consider the following statement.

"The negative of any irrational number is irrational."

The formal version of the given statement is as follows.

For any real number *x*, if $x \in \mathbb{R} \setminus \mathbb{Q}$,then $-x \in \mathbb{R} \setminus \mathbb{Q}$.

Step 2 of 5

(a)

The objective is to prove given statement by contraposition.

Step 3 of 5

Proof by contraposition:

Suppose $x \in \mathbb{Q}$, $-x \notin \mathbb{R} \setminus \mathbb{Q}$. By the definition of irrational, this means –*x* is rational.

By definition of rational,

$$-x = \frac{p_1}{p_2}$$

for some integers p_1 and p_2, with $p_2 \neq 0$

Consider *x*.

$$\begin{aligned} x &= -(-x) && [\text{by algebra}] \\ &= -\left(\frac{p_1}{p_2}\right) && [\text{by substitution}] \\ &= \frac{-p_1}{p_2} && [\text{by algebra}] \end{aligned}$$

Observe that $-p_1$ is an integer because $p_1 \in \mathbb{Z}$ and $-p_1 = (-1)p_1$. Also p_2 is nonzero. Thus *x* is the ratio of two integers and the denominator is nonzero. Therefore, $x \in \mathbb{Q}$.

Therefore, the given statement is true.

Step 4 of 5

(b)

The objective is to prove given statement by contradiction.

Step 5 of 5

Proof by contradiction:

Assume that there exists $x \in \mathbb{Q}$ such that $x \in \mathbb{R} \setminus \mathbb{Q}$ and $-x \notin \mathbb{R} \setminus \mathbb{Q}$.

This implies $x \in \mathbb{Q}$.

$$-x = \frac{p_1}{p_2}$$

for some integers p_1 and p_2, with $p_2 \neq 0$

Consider *x*.

$$\begin{aligned} x &= -(-x) && [\text{by algebra}] \\ &= -\left(\frac{p_1}{p_2}\right) && [\text{by substitution}] \\ &= \frac{-p_1}{p_2} && [\text{by algebra}] \end{aligned}$$

Observe that $-p_1 \in \mathbb{Z}$ because $p_1 \in \mathbb{Z}$ and $-p_1 = (-1)p_1$. Also p_2 is nonzero. Thus *x* is the ratio of two integers and the denominator is nonzero. Therefore, *x* is rational. Therefore, *x* is both rational and irrational.

This is a contradiction. So, the assumption is wrong.

Therefore, the given statement is true.

Chapter 4.7, Problem 24E

Problem

Prove the statement in two ways: (a) by contraposition and (b) by contradiction.

The reciprocal of any irrational number is irrational.

(The **reciprocal** of a nonzero real number *x* is 1/*x*.)

Step-by-step solution

Step 1 of 7

Consider the following statement.

"The reciprocal of any irrational number is irrational."

The formal version of the given statement is as follows.

For any real number *x*, if $x \in \mathbb{R} \setminus \mathbb{Q}$ then $\frac{1}{x} \in \mathbb{R} \setminus \mathbb{Q}$.

Step 2 of 7

(a)

The objective is to prove given statement by contraposition.

Step 3 of 7

Proof by contraposition:

Suppose $x \in \mathbb{Q}$, the reciprocal $\frac{1}{x}$ is not irrational. By the definition of irrational, this means the reciprocal is rational.

By definition of rational,

$\frac{1}{x} = \frac{p_1}{p_2}$ for some $p_1, p_2 (\neq 0) \in \mathbb{Z}$.

Consider $x\left(\frac{1}{x}\right)$.

$$x\left(\frac{1}{x}\right) = 1$$
$$\frac{1}{x} \neq 0$$
$$\frac{p_1}{p_2} \neq 0$$
$$p_1 \neq 0$$

Step 4 of 7

Consider $\frac{1}{x}$.

$$\frac{1}{x} = \frac{p_1}{p_2}$$
$$x = \frac{p_2}{p_1}$$

for some $p_1 (\neq 0), p_2 \in \mathbb{Z}$.

Thus *x* is the ratio of two integers and the denominator is nonzero. Therefore, *x* is rational.

Therefore, the given statement is true.

Step 5 of 7

(b)

The objective is to prove given statement by contradiction.

Step 6 of 7

Proof by contradiction:

Assume that there exists $x \in \mathbb{Q}$ such that *x* is irrational and the reciprocal $\frac{1}{x}$ is not irrational.

$\frac{1}{x} = \frac{p_1}{p_2}$ for some $p_1, p_2 (\neq 0) \in \mathbb{Z}$.

Consider $x\left(\frac{1}{x}\right)$.

$$x\left(\frac{1}{x}\right) = 1$$
$$\frac{1}{x} \neq 0$$
$$\frac{p_1}{p_2} \neq 0$$
$$p_1 \neq 0$$

Step 7 of 7

Consider $\frac{1}{x}$.

$$\frac{1}{x} = \frac{p_1}{p_2}$$
$$x = \frac{p_2}{p_1}$$

for some $p_1 (\neq 0), p_2 \in \mathbb{Z}$.

Thus *x* is the ratio of two integers and the denominator is nonzero. Therefore, *x* is rational.
Therefore, *x* is both rational and irrational,

This is a contradiction. So, the assumption is wrong.

Therefore, the given statement is true.

Chapter 4.7, Problem 25E

Problem

Prove the statement in two ways: (a) by contraposition and (b) by contradiction.

For every integer *n*, if *n*2 is odd then *n* is odd.

Step-by-step solution

Step 1 of 4

Consider the statement.

"For every integer *n*, if *n*2 is odd then *n* is odd."

(a)

The objective is to prove given statement by contraposition.

Step 2 of 4

Proof by contraposition:

Suppose $n \in \square$ which is not odd.

By definition of even,

$n = 2k$ for some $k \in \square$.

Consider n^2.

$$\begin{aligned} n^2 &= (2k)^2 && [\text{bu substitution}] \\ &= 4k^2 && [\text{by algebra}] \\ &= 2(2k^2) && [\text{by algebra}] \\ &= 2m \end{aligned}$$

where $2k^2 = m$.

Observe that $m = 2k^2 \in \square$ as the multiplication of integers is also an integer.

Thus by the definition of even, n^2 is even. Recall the fact that no integer is both even and odd. Therefore, n^2 is not odd.

Therefore, the given statement is true.

Step 3 of 4

(b)

The objective is to prove given statement by contradiction.

Step 4 of 4

Proof by contradiction:

Assume that $\exists n \in \square$ such that *n*2 is odd and *n* is not odd.

By definition, $n = 2k$ where $k \in \square$.

Consider n^2.

$$\begin{aligned} n^2 &= (2k)^2 && [\text{bu substitution}] \\ &= 4k^2 && [\text{by algebra}] \\ &= 2(2k^2) && [\text{by algebra}] \\ &= 2m \end{aligned}$$

Observe that $m = 2k^2$ is an integers as products of integers are integers.

Thus by the definition of even, n^2 is even. Recall the fact that no integer is both even and odd. Therefore, n^2 is not odd.

This is a contradiction to our hypothesis. So, the assumption is wrong.

Therefore, the given statement is true.

Chapter 4.7, Problem 26E

Problem

Use any method to prove the statement.

For all integers *a*, *b*, and *c*, if $a \nmid bc$ then $a \nmid b$.

Step-by-step solution

Step 1 of 2

Consider the statement.

"For all integers *a*, *b*, and *c*, if $a \nmid bc$ then $a \nmid b$"

The objective is to prove above statement is true.

Step 2 of 2

Proof by contradiction:

Assume that $\exists a, b, c \in \square$ such that $a \nmid bc$ and $a \mid b$.

By definition of divisibility,

$a \mid b$ .implies $b = an$ for some $n \in \square$.

Consider bc.

$$\begin{aligned} bc &= (an)c && [\text{by substitution}] \\ &= a(nc) && [\text{by associative law}] \\ &= am \end{aligned}$$

Observe that $m = nc$ is an integers. Since the products of integers are integers.

Thus by the definition of divisibility, $a \mid bc$

This is a contradiction to our hypothesis. So, the assumption is wrong.

Therefore, the given statement is true.

Chapter 4.7, Problem 27E

Problem

Use any method to prove the statement.

For all positive real numbers *r* and *s*, $\sqrt{r+s} \neq \sqrt{r} + \sqrt{s}$.

Step-by-step solution

Step 1 of 2

Consider the following statement.

"For all positive real numbers *r* and *s*, $\sqrt{r+s} \neq \sqrt{r} + \sqrt{s}$."

The objective is to prove above statement is true.

Step 2 of 2

Proof by contradiction:

Assume that $\exists r, s \in \mathbb{R}^+$ satisfying $\sqrt{r+s} = \sqrt{r} + \sqrt{s}$.

Consider $\sqrt{r+s} = \sqrt{r} + \sqrt{s}$.

$$\sqrt{r+s} = \sqrt{r} + \sqrt{s}$$

$$\left(\sqrt{r+s}\right)^2 = \left(\sqrt{r} + \sqrt{s}\right)^2 \qquad [\text{Squaring both sides}]$$

$$r + s = r + 2\sqrt{r}\sqrt{s} + s \qquad [\text{By algebra}]$$

Subtract $r+s$ from both the sides.

$$2\sqrt{r}\sqrt{s} = 0$$

which is a contradiction as $r, s \in \mathbb{R}^+$.

So, the assumption is wrong.

Therefore, the given statement is true.

Chapter 4.7, Problem 28E

Problem

Use any method to prove the statement.

For all integers *a*, *b*, and *c*, if *a*|*b* and $a \nmid c$, then $a \nmid (b+c)$.

Step-by-step solution

Step 1 of 3

Consider the statement.

"For all integers *a*, *b*, and *c*, if $a \mid b$ and $a \nmid c$, then $a \nmid (b+c)$"

The main objective of this problem is to prove the above statement.

Step 2 of 3

Proof by contradiction:

Assume that $\exists a, b, c \in \mathbb{Z}$ such that $a \mid b$, $a \nmid c$ and $a \mid (b+c)$.

By definition of divisibility,

$a \mid b$ implies $b = an$ for some $n \in \mathbb{Z}$.

$a \mid (b+c)$ implies $(b+c) = am$ for some $m \in \mathbb{Z}$

Consider $(b+c) = am$.

$$\begin{aligned} b + c &= am \\ an + c &= am \qquad [\text{by substitution}] \\ c &= am - an \\ c &= a(m-n) \\ c &= ak \end{aligned}$$

Step 3 of 3

Observe that $k = (m-n) \in \mathbb{Z}$. Since the difference of integers are integers.

Thus by the definition of divisibility, $a \mid c$

This is a contradiction to the hypothesis. So, the assumption is wrong.

Therefore, the given statement is true.

Chapter 4.7, Problem 29E

Problem

Use any method to prove the statement.

For all integers *m* and *n*, if *m* + *n* is even then *m* and *n* are both even or *m* and *n* are both odd.

Step-by-step solution

Step 1 of 3

The statement is "For all integers *m* and *n*, if $m+n$ is even then *m and n* are both even or *m* and *n* are both odd."

The objective is to prove the above statement.

Step 2 of 3

The contrapositive of the given statement is as follows.

"For all integers *m* and *n*, if *m and n* are of opposite parity, then $m+n$ is not even."

Proof by contraposition:

Let $m,n\in\square$ such that both are of different parity. That is if one is odd then the other is even.

Case 1: m and n are even and odd respectively.

$\exists a,b\in\square$ such that $m=2a$ and $n=2b+1$.

Consider $m+n$.

$$\begin{aligned} m+n &= 2a+(2b+1) \quad [\text{by substitution}] \\ &= 2a+2b+1 \\ &= 2(a+b)+1 \quad [\text{by algebra}] \end{aligned}$$

Let $k_1=a+b$. Then $k_1\in\square$ because sums of two integers is an integers. Thus $m+n=2k_1+1$ is odd by the definition of odd. That is $m+n$ is not even.

Step 3 of 3

Case 2: m and n are odd and even respectively.

$\exists a,b\in\square$ such that $m=2a+1$ and $n=2b$.

Consider $m+n$.

$$\begin{aligned} m+n &= (2a+1)+2b \quad [\text{by substitution}] \\ &= 2a+1+2b \\ &= 2(a+b)+1 \quad [\text{by algebra}] \end{aligned}$$

Let $k_2=a+b$. Then $k_2\in\square$ because sum of two integers is an integer. Thus $m+n=2k_2+1$ is odd by the definition of odd. That is $m+n$ is not even.

In both cases, $m+n$ is odd. That is $m+n$ is not even.

Thus, by the method of contraposition, if $m+n$ is even then *m and n* are both even or both odd.

Chapter 4.7, Problem 30E

Problem

a. Let $n = 53$. Find an approximate value for $\sqrt{n}$ and write a list of all the prime numbers less than or equal to $\sqrt{n}$. Is the following statement true or false? When $n = 53$, n is not divisible by any prime number less than or equal to $\sqrt{n}$.

b. Suppose n is a fixed integer. Let S be the statement, "n is not divisible by any prime number less than or equal to $\sqrt{n}$." The following statement is equivalent to S:

$\forall$ prime number p, if p is less than or equal to $\sqrt{n}$ then n is not divisible by p.

Which of the following are negations for S?

(i) $\exists$ a prime number p such that $p \le \sqrt{n}$ and n is divisible by p.

(ii) n is divisible by every prime number less than or equal to $\sqrt{n}$.

(iii) $\exists$ a prime number p such that p is a multiple of n and p is less than or equal to $\sqrt{n}$.

(iv) n is divisible by some prime number that is less than or equal to $\sqrt{n}$.

(v) $\forall$ prime number p, if p is less than or equal to $\sqrt{n}$, then n is divisible by p.

Step-by-step solution

Step 1 of 4

a.

The given statement is "When $n = 53$, n is not divisible by any prime number less than or equal to $\sqrt{n}$."

The objective is to check whether the above statement is correct or incorrect.

Step 2 of 4

The approximate value of $\sqrt{n}$ when $n = 53$ is as follows.

$\sqrt{53} \approx 7.28$

The prime numbers less than or equal to the approximate value of $\sqrt{53}$ are $2, 3, 5$ and 7.

Observe that 53 is not divisible by any of the primes 2, 3, 5 or 7.

Thus the given statement: "When $n = 53$, n is not divisible by any prime number less than or equal to $\sqrt{n}$." is true.

Step 3 of 4

b.

The given statement is " $\forall$ prime number p, if p is less than or equal to $\sqrt{n}$ then n is not divisible by p."

The objective is to find the correct options that represent the negation of the given statement.

Step 4 of 4

Observe that the negation of the given statement is as follows.

It is not the case that $\forall$ a prime number p if $p \le \sqrt{n}$ then n is not divisible by p.

Which is same as follows.

$\exists$ prime number p such that p is less than or equal to $\sqrt{n}$ and n is divisible by p.

The correct options that gives the negation of the given statement are (i) and (iv).

Chapter 4.7, Problem 31E

Problem

a. Prove by contraposition: For all positive integers n, r, and s, if $rs \le n$, then $r \le \sqrt{n}$ or $s \le \sqrt{n}$.

b. Prove: For all integers $n > 1$, if n is not prime, then there exists a prime number p such that $p \le \sqrt{n}$ and n is divisible by p. *(Hints:* Use the result of part (a) and Theorems 1, 2, and 3.)

c. State the contrapositive of the result of part (b).

The results of exercise 31 provide a way to test whether an integer is prime.

Test for Primality

Given an integer $n > 1$, to test whether n is prime check to see if it is divisible by a prime number less than or equal to its square root. If it is not divisible by any of these numbers, then it is prime.

Theorem 1

A Positive Divisor of a Positive Integer:

For all integers a and b, if a and b are positive and a divides b, then $a \le b$.

Proof:

Suppose a and b are positive integers and a divides b. *[We must show that $a \le b$.]* Then there exists an integer k so that $b = ak$. By property T25 of Appendix A, k must be positive because both a and b are positive. It follows that

$1 \le k$

because every positive integer is greater than or equal to 1. Multiplying both sides by a gives

$a \le ka = b$

because multiplying both sides of an inequality by a positive number preserves the inequality by property T20 of Appendix A. Thus $a \le b$ *[as was to be shown]*.

Theorem 2:

Transitivity of Divisibility

For all integers a, b, and c, if a divides b and b divides c, then a divides c.

Proof:

Suppose a, b, and c are *[particular but arbitrarily chosen]* integers such that a divides b and b divides c. *[We must show that a divides c.]* By definition of divisibility,

$b = ar$ and $c = bs$ for some integers r and s.

By substitution

$$\begin{aligned} c &= bs \\ &= (ar)s \\ &= a(rs) \quad \text{by basic algebra.} \end{aligned}$$

Let $k = rs$. Then k is an integer since it is a product of integers, and therefore

$c = ak$ where k is an integer.

Thus a divides c by definition of divisibility. *[This is what was to be shown.]*

Theorem 3

Divisibility by a Prime

Any integer $n > 1$ is divisible by a prime number.

Proof:

Suppose n is a *[particular but arbitrarily chosen]* integer that is greater than 1. *[We must show that there is a prime number that divides n.]* If n is prime, then n is divisible by a prime number (namely itself), and we are done. If n is not prime, then, as discussed in Example,

$n = r0s0$ where $r0$ and $s0$ are integers and $1 < r0 < n$ and $1 < s0 < n$.

It follows by definition of divisibility that $r0 \mid n$.

If $r0$ is prime, then $r0$ is a prime number that divides n, and we are done. If $r0$ is not prime, then

$r0 = r1s1$ where $r1$ and $s1$ are integers and $1 < r1 < r0$ and $1 < s1 < r0$.

It follows by the definition of divisibility that $r1 \mid r0$. But we already know that $r0 \mid n$. Consequently, by transitivity of divisibility, $r1 \mid n$.

If $r1$ is prime, then $r1$ is a prime number that divides n, and we are done. If $r1$ is not prime, then

$r1 = r2s2$ where $r2$ and $s2$ are integers and $1 < r2 < r1$ and $1 < s2 < r1$.

It follows by definition of divisibility that $r2 \mid r1$. But we already know that $r1 \mid n$. Consequently, by transitivity of divisibility, $r2 \mid n$.

If $r2$ is prime, then $r2$ is a prime number that divides n, and we are done. If $r2$ is not prime, then we may repeat the previous process by factoring $r2$ as $r3s3$.

We may continue in this way, factoring successive factors of n until we find a prime factor. We must succeed in a finite number of steps because each new factor is both less than the previous one (which is less than n) and greater than 1, and there are fewer than n integers strictly between 1 and n.* Thus we obtain a sequence

$r0, r1, r2, \ldots, rk$,

where $k \ge 0$, $1 < rk < r1 < \ldots < r2 < r1 < r0 < n$, and $ri \mid n$ for each $i = 0, 1, 2, \ldots, k$. The condition for termination is that rk should be prime. Hence rk is aprime number that divides n. *[This is what we were to show.]*

Example

Prime and Composite Numbers

a. Is 1 prime?

b. Is every integer greater than 1 either prime or composite?

c. Write the first six prime numbers.

d. Write the first six composite numbers.

Solution

a. No. A prime number is required to be greater than 1.

b. Yes. Let n be any integer that is greater than 1. Consider all pairs of positive integers r and s such that $n = rs$. There exist at least two such pairs, namely $r = n$ and $s = 1$ and $r = 1$ and $s = n$. Moreover, since $n = rs$, all such pairs satisfy the inequalities $1 \le r \le n$ and $1 \le s \le n$. If n is prime, then the two displayed pairs are the only ways to write n as rs. Otherwise, there exists a pair of positive integers r and s such that $n = rs$ and neither r nor s equals either 1 or n. Therefore, in this case $1 < r$ *and* $1 < s$, *and hence n is composite.*

c. 2, 3, 5, 7, 11, 13

d. 4, 6, 8, 9, 10, 12

Step-by-step solution

Step 1 of 6

(a)

The objective is to prove the statement: For all positive integers n, r and s, if $rs \le n$, then $r \le \sqrt{n}$ and $s \le \sqrt{n}$.

Use contraposition method to prove the above statement.

Contrapositive Statement: For all positive integers n, r and s, if $r > \sqrt{n}$ and $s > \sqrt{n}$, then $rs > n$.

Step 2 of 6

Suppose n, r and s are positive integers such that $r > \sqrt{n}$ and $s > \sqrt{n}$.

Then $r > \sqrt{n}$, $s > 0$

$rs > \left(\sqrt{n}\right)s$

Again, $s > \sqrt{n}$, $\sqrt{n} > 0$

$\left(\sqrt{n}\right)s > \left(\sqrt{n}\right)\left(\sqrt{n}\right) = n$

Since $rs > \left(\sqrt{n}\right)s$, $\left(\sqrt{n}\right)s > n$, therefore $rs > n$ by transitivity of inequality.

Hence, for all positive integers n, r and s, if $rs \le n$, then $r \le \sqrt{n}$ and $s \le \sqrt{n}$.

Step 3 of 6

(b)

The objective is to prove the statement,

For all integers that greater than 1, if n is not prime, then $\exists$ a prime number p such that $p \le \sqrt{n}$ and n is divisible by p.

From the theorem, Divisibility by a Prime: Any integer $n > 1$ is divisible by a prime.

Suppose $n > 1$ is not a prime number.

Then there exist a prime number $1 < p < n$ such that $p \mid n$.

Since $p \mid n$, then there exist an integer $1 < q < n$ such that $n = pq$.

Step 4 of 6

Now, there are two cases: q is either a prime number or a composite number.

Case-1: q is a prime number.

$n = pq$

$pq \le n$

Therefore, by part (a), $p \le \sqrt{n}$ or $q \le \sqrt{n}$

$n = pq$

$p \mid n \,\&\, q \mid n$

Step 5 of 6

Case-2: q is a composite number.

Then there exist a prime number $1 < r < q$ such that $r \mid q$.

$r \mid q$

$pr \mid pq$

$pr \mid n$

$pr \le n$

Therefore, by part (a), $p \le \sqrt{n}$ or $r \le \sqrt{n}$

$pr \mid n$

$p \mid n \,\&\, p \mid n$

By Case-1 and Case-2, obtain:

For all integers $n > 1$, if n is not a prime, then there exists a prime number p such that $p \le \sqrt{n}$ and n is divisible by p.

Step 6 of 6

(c)

The objective is to state the contrapositive of the result of part (b).

Contrapositive Statement of part (b):

For all integers $n > 1$, if for all prime numbers p, $p > \sqrt{n}$ or n is not divisible by p, then n is a prime.

Or

For all integers $n > 1$, if for all prime numbers p, $p \le \sqrt{n}$ and n is not divisible by p, then n is a prime.

Chapter 4.7, Problem 32E

Problem

Use the test for primality to determine whether the following numbers are prime or not.

a. 667

b. 557

c. 527

d. 613

Step-by-step solution

Step 1 of 4

(a)

Given n = 667

$$\sqrt{n} = \sqrt{667}$$
$$= 25.82634314$$

The prime numbers less than or equal to $\sqrt{667}$ are 2, 3,5,7,11,13,17,19,23

Here 677 is divisible by 23.

i.e., 23 is a factor of 677

Hence by test for primality, **667 is not a prime number.**

Step 2 of 4

(b)

Given n = 557

$$\sqrt{n} = \sqrt{557}$$
$$= 23.60084744$$

The prime numbers less than or equal to $\sqrt{557}$ are 2, 3, 5, 7, 11, 13, 17, 19, 23.

Here 577 is not divisible by any of these numbers 2, 3, 5, 7, 11, 13, 17, 19, 23.

Hence by test for primality, **557 is a prime number.**

Step 3 of 4

(c)

Given n= 527

$$\sqrt{n} = \sqrt{527}$$
$$= 22.95648057$$

The prime numbers less than or equal to $\sqrt{527}$ are 2, 3, 5, 7, 11, 17, 19.

Here 527 is divisible by 17, i.e., 17 is a factor of 527.

Hence by test for primality, **527 is not prime number.**

Step 4 of 4

(d)

Given n= 613

$$\sqrt{n} = \sqrt{613}$$
$$= 24.75883681$$

The prime numbers less than or equal to $\sqrt{613}$ are 2, 3, 5, 7, 11, 17, 19, 23.

Here 613 not divisible by any of these numbers 2, 3, 5, 7, 11, 17, 19, 23.

Hence by test for primality, **527 is prime number.**

Comments (1)

The answer for d is wrong. It should say 613 is a Prime number

Chapter 4.7, Problem 33E

Problem

The sieve of Eratosthenes, named after its inventor, the Greek scholar Eratosthenes (276-194 B.C.E.), provides a way to find all prime numbers less than or equal to some fixed number *n*. To construct it, write out all the integers from 2 to *n*. Cross out all multiples of 2 except 2 itself, then all multiples of 3 except 3 itself, then all multiples of 5 except 5 itself, and so forth. Continue crossing out the multiples of each successive prime number up *to* $\sqrt{n}$. The numbers that are not crossed out are all the prime numbers from 2 to *n*. Here is a sieve of Eratosthenes that includes the numbers from 2 to 27. The multiples of 2 are crossed out with a /, the multiples of 3 with a \, and the multiples of 5 with a —.

2 3 ~~4~~ 5 ~~6~~ 7 ~~8~~ ~~9~~ ~~10~~ 11 ~~12~~ 13 ~~14~~
~~15~~ ~~16~~ 17 ~~18~~ 19 ~~20~~ ~~21~~ ~~22~~ 23 ~~24~~ ~~25~~ ~~26~~ ~~27~~

Use the sieve of Eratosthenes to find all prime numbers less than 100.

Step-by-step solution

Step 1 of 4

Recollect the definition of sieve of Eratosthenes.

This method is used to identify the prime numbers less than or equal to some fixed integer n.

To do this, to write all the numbers from 2 to n.

All the multiples of 2 except 2 are crossed out, then all the multiples of 3 except 3 are crossed out and then all the multiples of 5 are crossed out except 5 itself and soon.

Continue the process of each successive prime numbers up to square root of n.

From 2 to n, the numbers remaining to not cross out are all the prime numbers.

Step 2 of 4

The objective is to use the sieve of Eratosthenes method, to find the prime numbers less than 100.

First write all the numbers from 2 to 99.

Then cross the numbers that are multiples of 2, except 2 and multiples of 3 except 3, multiples of 5 except 5, and so on.

Step 3 of 4

The numbers that are not crossed out are all prime numbers from 2 to 100.

2 3 ~~4~~ 5 ~~6~~ 7 ~~8~~ ~~9~~ ~~10~~
11 ~~12~~ 13 ~~14~~ ~~15~~ ~~16~~ 17 ~~18~~ 19 ~~20~~
~~21~~ ~~22~~ 23 ~~24~~ ~~25~~ ~~26~~ ~~27~~ ~~28~~ 29 ~~30~~
31 ~~32~~ ~~33~~ ~~34~~ ~~35~~ ~~36~~ 37 ~~38~~ ~~39~~ ~~40~~
41 ~~42~~ 43 ~~44~~ ~~45~~ ~~46~~ 47 ~~48~~ ~~49~~ ~~50~~
~~51~~ ~~52~~ 53 ~~54~~ ~~55~~ ~~56~~ ~~57~~ ~~58~~ 59 ~~60~~
61 ~~62~~ ~~63~~ ~~64~~ ~~65~~ ~~66~~ 67 ~~68~~ ~~69~~ ~~70~~
71 ~~72~~ 73 ~~74~~ ~~75~~ ~~76~~ ~~77~~ ~~78~~ 79 ~~80~~
~~81~~ ~~82~~ 83 ~~84~~ ~~85~~ ~~86~~ ~~87~~ ~~88~~ 89 ~~90~~
~~91~~ ~~92~~ ~~93~~ ~~94~~ ~~95~~ ~~96~~ 97 ~~98~~ ~~99~~ ~~100~~

Step 4 of 4

Here the numbers which are multiples of 2 are crossed with the symbol $/$, the numbers which are multiples of 3 are crossed with the symbol $\backslash$, and the numbers which are multiples of 5 are crossed with $-$, and the numbers that are multiples of 7 are crossed with $/$ again and soon.

Hence, the prime numbers less than 100 are,

$$\boxed{\begin{array}{c}2,3,5,7,11,13,17,19,23,29,31,37,41,43,47,\\ 53,59,61,67,71,\ 73,79,83,89,\text{and } 97\end{array}}.$$

Chapter 4.7, Problem 34E

Problem

Use the test for primality and the result of exercise to determine whether the following numbers are prime.

a. 9,269

b. 9,103

c. 8,623

d. 7,917

Exercise

The sieve of Eratosthenes, named after its inventor, the Greek scholar Eratosthenes (276-194 B.C.E.), provides a way to find all prime numbers less than or equal to some fixed number *n*. To construct it, write out all the integers from 2 to *n*. Cross out all multiples of 2 except 2 itself, then all multiples of 3 except 3 itself, then all multiples of 5 except 5 itself, and so forth. Continue crossing out the multiples of each successive prime number up *to* $\sqrt{n}$. The numbers that are not crossed out are all the prime numbers from 2 to *n*. Here is a sieve of Eratosthenes that includes the numbers from 2 to 27. The multiples of 2 are crossed out with a /, the multiples of 3 with a \, and the multiples of 5 with a —.

2 3 ~~4~~ 5 ~~6~~ 7 ~~8~~ ~~9~~ ~~10~~ 11 ~~12~~ 13 ~~14~~
~~15~~ ~~16~~ 17 ~~18~~ 19 ~~20~~ ~~21~~ ~~22~~ 23 ~~24~~ ~~25~~ ~~26~~ ~~27~~

Use the sieve of Eratosthenes to find all prime numbers less than 100.

Step-by-step solution

Step 1 of 4

Test of primality states that, for an integer $n > 1$: the integer n is not prime if it is divisible by a prime number less than or equal to its square root. If it is not divisible by any of these numbers, then it is prime.

a.

The number is 9269.

Now using the test of primality to check the number is prime or not.

At first find the square root of the number.

$\sqrt{9269} \cong 96.3$

Now, need to check that whether the possible prime factors are divisible to the number or not. The prime numbers less than the square root of the given number are as follows:

2,3,5,7,11,13,17,19,23,29,31,37,41,43,47,53,59,61, 67 , 71 , 73 , 79 , 83 and 89

Now, it can easily be seen that the number 9269 is divisible by 13, hence the given number is not prime.

Step 2 of 4

b.

The number is 9103. Now using the test of primality to check the number is prime or not.

At first find the square root of the number.

$\sqrt{9103} \cong 95.4$

Now, need to check whether the possible prime factors are divisible to the number or not. The prime numbers less than the square root of the given number are as follows:

2,3,5,7,11,13,17,19,23,29,31,37,41,43,47,53,59,61, 67 , 71 , 73 , 79 , 83 and 89

Here, none of the prime factor less than the square root of the number divides the given number, therefore **the number is prime.**

Step 3 of 4

c.

The number is 8623. Now using the test of primality to check the number is prime or not.

At first find the square root of the number.

$\sqrt{8623} \cong 92.86$

Now, need to check whether the possible prime factors found in exercise 33 is divisible to the number or not. The prime numbers less than the square root of the given number are as follows:

2,3,5,7,11,13,17,19,23,29,31,37,41,43,47,53,59,61, 67 , 71 , 73 , 79 , 83 and 89

Here, none of the prime factor less than the square root of the number divides the given number, therefore **the number is prime.**

Step 4 of 4

d.

The number is 7917. Now using the test of primality to check the number is prime or not.

At first find the square root of the number.

$\sqrt{7917} \cong 88.97$

Now, need to check whether the possible prime factors found in exercise 33 is divisible to the number or not. The prime numbers less than the square root of the given number are as follows:

2,3,5,7,11,13,17,19,23,29,31,37,41,43,47,53,59,61, 67 , 71 , 73 , 79 , and 83

Now, it can easily be seen that the number 9269 is divisible by 13, as $7917 = 13 \cdot 609$, hence the given number is not prime.

Chapter 4.7, Problem 35E

Problem

Use proof by contradiction to show that every integer greater than 11 is a sum of two composite numbers.

Step-by-step solution

Step 1 of 1

The objective is to use contradiction method to show that every integer greater than 11 is a sum of two composite numbers.

Take n as an integer.

Assume that $n > 11$.

Assume the contradiction, i.e., n cannot be written as the sum of two composite integers.

i.e., $n = p_1 + p_2 > 11$, p_1 and p_2 are primes.

Since $p_1 + p_2 > 11$ and p_1, p_2 are prime numbers, the possibility is $p_1 > 3, p_2 > 7$.

So p_1 and p_2 are odd prime numbers.

$$\begin{aligned} n &= p_1 + p_2 > 11 \\ &= (p_1 - 1) + (p_2 + 1) \end{aligned}$$

Since p_1, p_2 are odd primes, $p_1 - 1, p_2 + 1$ are even.

So $p_1 - 1$, $p_2 + 1$ are even, and they are composite numbers.

This is a contradiction.

Our assumption is wrong.

Thus, every integer greater than 11 can be expressed as the sum of two composite numbers.

Chapter 4.7, Problem 36E

Problem

For all odd integers *a*, *b*, and *c*, if *z* is a solution of *ax*2 + *bx* + *c* = 0 then *z* is irrational. (In the proof, use the properties of even and odd integers that are listed in Example 4.3.3.)

Step-by-step solution

Step 1 of 4

Consider the statement: "For all odd integers *a*, *b* and *c*, if *z* is a solution of $ax^2+bx+c=0$ then *z* is irrational."

The objective of this problem is to prove the above statement.

Step 2 of 4

Proof by contradiction:

Assume that $\exists a,b,c\in\square$ which are odd and a rational number *z* such that $az^2+bz+c=0$.

By the definition of rational, there exists integers *p* and *q* such that

$$z=\frac{m}{n} \text{ and } n\neq 0 \text{ and } \gcd(m,n)=1$$

Substituting,

$$a\left(\frac{m}{n}\right)^2+b\left(\frac{m}{n}\right)+c=0$$

$$am^2+bmn+cn^2=0 \quad \cdots\cdots (1)$$

Step 3 of 4

Case 1: *m* is even.

Observe that $am^2+bmn=m(am+bn)$ is even since product of an integer with even integer is even. Subtract the same for the equation (1) as follows.

$$am^2+bmn+cn^2-(am^2+bmn)=0-(am^2+bmn)$$

$$cn^2=0-(\text{even number})$$

Thus cn^2 is even as it is the difference of even numbers. Since *c* is odd, the possible way that cn^2 is even is that *n* to be even. Or else it would be the product of odd integers and eventually odd. So, m and n are even. Hence both m and n have gcd other than 1. This is a contradiction to the assumption that m and n have no common factors other than 1.

Step 4 of 4

Case 2: *n* is even.

Observe that $bmn+cn^2=n(bm+cn)$ is even since product of an integer with even integer is even. Subtract the same for the equation (1) as follows.

$$am^2+bmn+cn^2-(bmn+cn^2)=0-(bmn+cn^2)$$

$$am^2=0-(\text{even number})$$

Thus am^2 is even as it is the difference of even numbers. Since *a* is odd, the possible way that am^2 is even is that *m* to be even. Or else it would be the product of odd integers and eventually odd. So, m and n are even. Hence both m and n have gcd other than 1. This is a contradiction to the assumption that m and n have no common factors other than 1.

In both possible cases a contradiction is achieved and thus the assumption is false. Thus the statement is true.

Chapter 5.1, Problem 1E

Problem

Write the first four terms of the sequences defined by the formulas in.

Exercise

$a_k = \frac{k}{10+k}$, for all integers $k \geq 1$.

Step-by-step solution

Step 1 of 4

It is given that $a_k = \frac{k}{10+k}$ for all integers $k \geq 1$

1) Substituting $k = 1$ into the equation, we get

$$a_1 = \frac{1}{10+1} = \frac{1}{11}$$

$$\Rightarrow a_1 = \frac{1}{11}$$

Step 2 of 4

2) Substituting $k = 2$ into the equation, we get

$$a_2 = \frac{2}{10+2} = \frac{2}{12} = \frac{2}{6\times 2} = \frac{1}{6}$$

$$\Rightarrow a_2 = \frac{1}{6}$$

Step 3 of 4

3) Substituting $k = 3$ into the equation, we get

$$a_3 = \frac{3}{10+3} = \frac{3}{13}$$

$$\Rightarrow a_3 = \frac{3}{13}$$

Step 4 of 4

4) Substituting $k = 4$ into the equation, we get

$$a_4 = \frac{4}{10+4} = \frac{4}{14} = \frac{2\times 2}{2\times 7} = \frac{2}{7}$$

$$\Rightarrow a_4 = \frac{2}{7}$$

$\therefore$ The first four terms of the sequence defined by $a_k = \frac{k}{10+k}$ are $\frac{1}{11}, \frac{1}{6}, \frac{3}{13}$, and $\frac{2}{7}$

This is equivalent to

$$\frac{1}{11}, \frac{2}{12}, \frac{3}{13}, \frac{4}{14}$$

Chapter 5.1, Problem 2E

Problem

Write the first four terms of the sequences defined by the formulas in.

Exercise

$b_j = \frac{5-j}{5+j}$, for all integers $j \geq 1$.

Step-by-step solution

Step 1 of 4

It is given that $b_j = \frac{5-j}{5+j}$ for all integers $j \geq 1$

1) Substituting $j = 1$ into the equation, we get

$$b_1 = \frac{5-1}{5+1} = \frac{4}{6}$$

$$\Rightarrow b_1 = \frac{4}{6}$$

Step 2 of 4

2) Substituting $j = 2$ into the equation, we get

$$b_2 = \frac{5-2}{5+2} = \frac{3}{7}$$

$$\Rightarrow b_2 = \frac{3}{7}$$

Step 3 of 4

3) Substituting $j = 3$ into the equation, we get

$$b_3 = \frac{5-3}{5+3} = \frac{2}{8}$$

$$\Rightarrow b_3 = \frac{2}{8}$$

Step 4 of 4

4) Substituting $j = 4$ into the equation, we get

$$b_4 = \frac{5-4}{5+4} = \frac{1}{9}$$

$$\Rightarrow b_4 = \frac{1}{9}$$

$\therefore$ The first four terms in the sequence $b_j = \frac{5-j}{5+j}$ are $\frac{4}{6}, \frac{3}{7}, \frac{2}{8}$, and $\frac{1}{9}$

Chapter 5.1, Problem 3E

Problem

Write the first four terms of the sequences defined by the formulas in.

Exercise

$c_i = \frac{(-1)^i}{3^i}$, for all integers $i \geq 0$.

Step-by-step solution

Step 1 of 5

It is given that $C_i = \frac{(-1)^i}{3^i}$ for all integers $i \geq 0$

(1) Substituting $i = 0$ into the equation, we get

$$C_0 = \frac{(-1)^0}{3^0} = \frac{1}{1} = 1 \qquad \left(\because (-1)^0 = 1 \text{ and } 3^0 = 1\right)$$

$$\Rightarrow C_0 = 1$$

Step 2 of 5

(2) Substituting $i = 1$ into the equation, we get

$$C_1 = \frac{(-1)^1}{3^1} = -\frac{1}{3} \qquad \left(\because (-1)^1 = 1 \text{ and } 3^1 = 3\right)$$

$$\Rightarrow C_1 = -\frac{1}{3}$$

Step 3 of 5

(3) Substituting $i = 2$ into the equation, we get

$$C_2 = \frac{(-1)^2}{3^2} = \frac{1}{9} \qquad \left(\because (-1)^2 = -1 \times -1 = 1 \text{ and } 3^2 = 3 \times 3 = 9\right)$$

$$\Rightarrow C_2 = \frac{1}{9}$$

Step 4 of 5

(4) Substituting $i = 3$ into the equation, we get

$$C_3 = \frac{(-1)^3}{3^3} = -\frac{1}{27} \qquad \left(\because (-1)^3 = -1 \times -1 \times -1 = -1 \text{ and } 3^2 = 3 \times 3 \times 3 = 27\right)$$

$$\Rightarrow C_3 = -\frac{1}{27}$$

Step 5 of 5

$\therefore$ The first four terms in the sequence $C_i = \frac{(-1)^i}{3^i}$ for all integers $i \geq 0$ are

$1, \frac{-1}{3}, \frac{1}{9}$, and $-\frac{1}{27}$

Chapter 5.1, Problem 4E

Problem

Write the first four terms of the sequences defined by the formulas in.

Exercise

$d_m = 1 + \left(\frac{1}{2}\right)^m$ for all integers $m \geq 0$.

Step-by-step solution

Step 1 of 4

It is given that $d_m = 1 + \left(\frac{1}{2}\right)^m$ for all integers $m \geq 0$

1) Substituting $m = 0$ into the equation, we get

$$d_0 = 1 + \left(\frac{1}{2}\right)^0 = 1 + 1 = 2 \quad \left(\because \left(\frac{1}{2}\right)^0 = 1\right)$$

$$\Rightarrow d_0 = 2$$

Step 2 of 4

2) Substituting $m = 1$ into the equation, we get

$$d_1 = 1 + \left(\frac{1}{2}\right)^1 = 1 + \frac{1}{2} \quad \left(\because \left(\frac{1}{2}\right)^1 = \frac{1}{2}\right)$$

$$\Rightarrow d_1 = \frac{3}{2}$$

Step 3 of 4

3) Substituting $m = 2$ into the equation, we get

$$d_2 = 1 + \left(\frac{1}{2}\right)^2 \quad \left(\because \left(\frac{1}{2}\right)^2 = \frac{1}{2} \times \frac{1}{2} = \frac{1 \times 1}{2 \times 2} = \frac{1}{4}\right)$$

$$= 1 + \frac{1}{4} = \frac{4+1}{4} = \frac{5}{4}$$

$$\Rightarrow d_2 = \frac{5}{4}$$

Step 4 of 4

4) Substituting $m = 3$ into the equation, we get

$$d_3 = 1 + \left(\frac{1}{2}\right)^3 = 1 + \frac{1}{8} \quad \left(\because \left(\frac{1}{2}\right)^3 = \frac{1}{2} \times \frac{1}{2} \times \frac{1}{2} = \frac{1 \times 1 \times 1}{2 \times 2 \times 2} = \frac{1}{8}\right)$$

$$= \frac{8+1}{8} = \frac{9}{8}$$

$\therefore$ The first four terms in the sequence $d_m = 1 + \left(\frac{1}{2}\right)^m$ for all integers $m \geq 0$ are

$2, \frac{3}{2}, \frac{5}{4}$, and $\frac{9}{8}$

Chapter 5.1, Problem 4E

Problem

Write the first four terms of the sequences defined by the formulas in.

Exercise

$d_m = 1 + \left(\frac{1}{2}\right)^m$ for all integers $m \geq 0$.

Step-by-step solution

Step 1 of 4

It is given that $d_m = 1 + \left(\frac{1}{2}\right)^m$ for all integers $m \geq 0$

1) Substituting $m = 0$ into the equation, we get

$$d_0 = 1 + \left(\frac{1}{2}\right)^0 = 1 + 1 = 2 \quad \left(\because \left(\frac{1}{2}\right)^0 = 1\right)$$

$$\Rightarrow d_0 = 2$$

Step 2 of 4

2) Substituting $m = 1$ into the equation, we get

$$d_1 = 1 + \left(\frac{1}{2}\right)^1 = 1 + \frac{1}{2} \quad \left(\because \left(\frac{1}{2}\right)^1 = \frac{1}{2}\right)$$

$$\Rightarrow d_1 = \frac{3}{2}$$

Step 3 of 4

3) Substituting $m = 2$ into the equation, we get

$$d_2 = 1 + \left(\frac{1}{2}\right)^2 \quad \left(\because \left(\frac{1}{2}\right)^2 = \frac{1}{2} \times \frac{1}{2} = \frac{1 \times 1}{2 \times 2} = \frac{1}{4}\right)$$

$$= 1 + \frac{1}{4} = \frac{4+1}{4} = \frac{5}{4}$$

$$\Rightarrow d_2 = \frac{5}{4}$$

Step 4 of 4

4) Substituting $m = 3$ into the equation, we get

$$d_3 = 1 + \left(\frac{1}{2}\right)^3 = 1 + \frac{1}{8} \quad \left(\because \left(\frac{1}{2}\right)^3 = \frac{1}{2} \times \frac{1}{2} \times \frac{1}{2} = \frac{1 \times 1 \times 1}{2 \times 2 \times 2} = \frac{1}{8}\right)$$

$$= \frac{8+1}{8} = \frac{9}{8}$$

$\therefore$ The first four terms in the sequence $d_m = 1 + \left(\frac{1}{2}\right)^m$ for all integers $m \geq 0$ are

$2, \frac{3}{2}, \frac{5}{4}$, and $\frac{9}{8}$

Chapter 5.1, Problem 4E

Problem

Write the first four terms of the sequences defined by the formulas in.

Exercise

$d_m = 1 + \left(\frac{1}{2}\right)^m$ for all integers $m \geq 0$.

Step-by-step solution

Step 1 of 4

It is given that $d_m = 1 + \left(\frac{1}{2}\right)^m$ for all integers $m \geq 0$

1) Substituting $m = 0$ into the equation, we get

$$d_0 = 1 + \left(\frac{1}{2}\right)^0 = 1 + 1 = 2 \quad \left(\because \left(\frac{1}{2}\right)^0 = 1\right)$$

$$\Rightarrow d_0 = 2$$

Step 2 of 4

2) Substituting $m = 1$ into the equation, we get

$$d_1 = 1 + \left(\frac{1}{2}\right)^1 = 1 + \frac{1}{2} \quad \left(\because \left(\frac{1}{2}\right)^1 = \frac{1}{2}\right)$$

$$\Rightarrow d_1 = \frac{3}{2}$$

Step 3 of 4

3) Substituting $m = 2$ into the equation, we get

$$d_2 = 1 + \left(\frac{1}{2}\right)^2 \quad \left(\because \left(\frac{1}{2}\right)^2 = \frac{1}{2} \times \frac{1}{2} = \frac{1 \times 1}{2 \times 2} = \frac{1}{4}\right)$$

$$= 1 + \frac{1}{4} = \frac{4+1}{4} = \frac{5}{4}$$

$$\Rightarrow d_2 = \frac{5}{4}$$

Step 4 of 4

4) Substituting $m = 3$ into the equation, we get

$$d_3 = 1 + \left(\frac{1}{2}\right)^3 = 1 + \frac{1}{8} \quad \left(\because \left(\frac{1}{2}\right)^3 = \frac{1}{2} \times \frac{1}{2} \times \frac{1}{2} = \frac{1 \times 1 \times 1}{2 \times 2 \times 2} = \frac{1}{8}\right)$$

$$= \frac{8+1}{8} = \frac{9}{8}$$

$\therefore$ The first four terms in the sequence $d_m = 1 + \left(\frac{1}{2}\right)^m$ for all integers $m \geq 0$ are

$2, \frac{3}{2}, \frac{5}{4}$, and $\frac{9}{8}$

Chapter 5.1, Problem 7E

Problem

Write the first four terms of the sequences defined by the formulas in.

Exercise

Let *ak* = 2*k* + 1 and *bk* = *(k* – 1)3 + *k* + 2 for all integers *k* ≥ 0. Show that the first three terms of these sequences are identical but that their fourth terms differ.

Step-by-step solution

Step 1 of 5

Let $a_k = 2k+1$ and $b_k = (k-1)^3 + k + 2$ for all integers $k \geq 0$

1) Substituting $k = 0$ into the equation, we get

$a_0 = 2\times 0 + 1 = 0 + 1 = 1 \Rightarrow a_0 = 1$

$b_0 = (0-1)^3 + 0 + 2 = (-1)^3 + 2 = -1 + 2 = 1 \quad \left(\because (-1)^3 = -1\right)$

$\Rightarrow b_0 = 1$

$\therefore a_0 = b_0 = 1$

Step 2 of 5

2) Substituting $k = 1$ into the equation, we get

$a_1 = 2\times 1 + 1 = 2 + 1 = 3 \Rightarrow a_1 = 3$

$b_1 = (1-1)^3 + 1 + 2 = 0^3 + 3 = 0 + 3 = 3 \quad \left(\because 0^3 = 0\right)$

$\Rightarrow b_1 = 3$

$\therefore a_1 = 3 = b_1$

Step 3 of 5

3) Substituting $k = 2$ into the equation, we get

$a_2 = 2\times 2 + 1 = 4 + 1 = 5 \Rightarrow a_2 = 5$

$b_2 = (2-1)^3 + 2 + 2 = 1^3 + 4 = 1 + 4 = 5 \quad \left(\because 1^3 = 1\right) \Rightarrow b_2 = 5$

$\therefore a_2 = 5 = b_2$

Step 4 of 5

4) Substituting $k = 3$ into the equation, we get

$a_3 = 2\times 3 + 1 = 6 + 1 = 7 \Rightarrow a_3 = 7$

$b_3 = (3-1)^3 + 3 + 2 = 2^3 + 5 = 8 + 5 = 13 \quad \left(\because 2^3 = 2\times 2\times 2 = 8\right)$

$\Rightarrow b_3 = 13$

$\Rightarrow a_3 \neq b_3$

Step 5 of 5

$\therefore$ The first three terms of the sequences $a_k = 2k+1$ and $b_k = (k-1)^3 + k + 2$ for all integers $k \geq 0$ are equal, they are $a_0 = b_0 = 1$, $a_1 = b_1 = 3$, and $a_2 = b_2 = 5$. The fourth term of these sequences, however, are not equal. They are $a_3 = 7$ and $b_3 = 13 \Rightarrow a_3 \neq b_3$.

Chapter 5.1, Problem 8E

Problem

Compute the first fifteen terms of each of the sequences in 8 and 9, and describe the general behavior of these sequences in words. (A definition of logarithm is given in Section 7.1.)

$$g_n = \lfloor \log_2 n \rfloor \text{ for all integers } n \geq 1.$$

Step-by-step solution

Step 1 of 14

It is given that $g_n = \lfloor \log_2 n \rfloor$ for all integers $n \geq 1$

Now, we find the first fifteen terms of the sequence g_n

(1) Substituting $n = 1$ into the equation, we get

$\log_2^1 = 0$

$\Rightarrow g_1 = \lfloor \log_2 1 \rfloor = \lfloor 0 \rfloor = 0$

$\therefore g_1 = 0$

Step 2 of 14

(2) Substituting $n = 2$ into the equation, we get

$\log_2 2 = 1 \qquad (\because \log_a n = 1)$

$\Rightarrow g_2 = \lfloor \log_2 2 \rfloor = \lfloor 1 \rfloor = 1$

$\therefore g_2 = 1$

Step 3 of 14

(3) Substituting $n = 3$ into the equation, we get

$\log_2 3 = 1.5849$

$\Rightarrow g_3 = \lfloor \log_2 3 \rfloor = \lfloor 1.5849 \rfloor = 1 \qquad [\because \lfloor x \rfloor = n \text{ if } n \leq x < n+1]$

$\therefore g_3 = 1$

Step 4 of 14

(4) Substituting $n = 4$ into the equation, we get

$\log_2 4 = \log_2 (2)^2 = 2\log_2 2 = 2 \times 1 = 2 \qquad (\because \log a^b = b \log a)$

$\Rightarrow g_4 = \lfloor \log_2 4 \rfloor = \lfloor 2 \rfloor = 2$

$\therefore g_4 = 2$

Step 5 of 14

(5) Substituting $n = 5$ into the equation, we get

$\log_2 5 = 2.3219$

$\Rightarrow g_5 = \lfloor \log_2 5 \rfloor = \lfloor 2.3219 \rfloor = 2 \qquad (\because \lfloor x \rfloor = n \text{ if } n \leq x < n+1)$

$\therefore g_5 = 2$

(6) Substituting $n = 6$ into the equation, we get

$\log_2 6 = 2.5849$

$\Rightarrow g_6 = \lfloor \log_2 6 \rfloor = \lfloor 2.5849 \rfloor = 2 \qquad (\because \lfloor x \rfloor = n \text{ if } n \leq x < n+1)$

$\therefore g_6 = 2$

Step 6 of 14

(7) Substituting $n = 7$ into the equation, we get

$\log_2 7 = 2.8073$

$\Rightarrow g_7 = \lfloor \log_2 7 \rfloor = \lfloor 2.8073 \rfloor = 2 \qquad (\because \lfloor x \rfloor = n \text{ if } n \leq x < n+1)$

$\therefore g_7 = 2$

Step 7 of 14

(8) Substituting $n = 8$ into the equation, we get

$\log_2 8 = \log_2 2^3 = 3\log_2 2 = 3 \times 1 = 3 \qquad (\because \log a^b = b \log a)$

$\Rightarrow g_8 = \lfloor \log_2 8 \rfloor = \lfloor 3 \rfloor = 3$

$\therefore g_8 = 3$

Step 8 of 14

(9) Substituting $n = 9$ into the equation, we get

$\log_2 9 = 3.1699$

$\Rightarrow g_9 = \lfloor \log_2 9 \rfloor = \lfloor 3.1699 \rfloor = 3 \qquad (\because \lfloor x \rfloor = n \text{ if } n \leq x > n+1)$

$\therefore g_9 = 3$

Step 9 of 14

(10) Substituting $n = 10$ into the equation, we get

$\log_2 10 = 3.3219$

$\Rightarrow g_{10} = \lfloor 3.3219 \rfloor = 3 \qquad (\because \lfloor x \rfloor = n \text{ if } n \leq x > n+1)$

$\therefore g_{10} = 3$

Step 10 of 14

(11) Substituting $n = 11$ into the equation, we get

$\log_2 11 = 3.4594$

$\Rightarrow g_{11} = \lfloor 3.4594 \rfloor = 3 \qquad (\because \lfloor x \rfloor = n \text{ if } n \leq x > n+1)$

$\therefore g_{11} = 3$

(12) Substituting $n = 12$ into the equation, we get

$\log_2 12 = 3.5849$

$\Rightarrow g_{12} = \lfloor \log_2 12 \rfloor = \lfloor 3.5849 \rfloor = 3 \qquad (\because \lfloor x \rfloor = n \text{ if } n \leq x > n+1)$

$\therefore g_{12} = 3$

Step 11 of 14

(13) Substituting $n = 13$ into the equation, we get

$\log_2 13 = 3.7004$

$\Rightarrow g_{13} = \lfloor \log_2 13 \rfloor = \lfloor 3.7004 \rfloor = 3 \qquad (\because \lfloor x \rfloor = n \text{ if } n \leq x > n+1)$

$\therefore g_{13} = 3$

Step 12 of 14

(14) Substituting $n = 14$ into the equation, we get

$\log_2 14 = 3.8073$

$\Rightarrow g_{14} = \lfloor \log_2 14 \rfloor = \lfloor 3.8073 \rfloor = 3 \qquad (\because \lfloor x \rfloor = n \text{ if } n \leq x > n+1)$

$\therefore g_{14} = 3$

Step 13 of 14

(15) Substituting $n = 15$ into the equation, we get

$\log_2 15 = 3.9068$

$\Rightarrow g_{15} = \lfloor \log_2 15 \rfloor = \lfloor 3.9068 \rfloor = 3 \qquad (\because \lfloor x \rfloor = n \text{ if } n \leq x > n+1)$

$\therefore g_{15} = 3$

Step 14 of 14

$\therefore$ The first fifteen terms of the sequence $g_n = \lfloor \log_2 n \rfloor$ for all integers $n \geq 1$ are $0, 1, 1, 2, 2, 2, 2, 3, 3, 3, 3, 3, 3, 3, 3$

When n is an integral power of 2, g_n is the exponent of that power

For example, if $8 = 2^3$, then $g_8 = 3$

Similarly, if $n = 2^k$ where k is an integer, then $g_n = k$

All of the terms of the sequence from g_n up to g_m, where $m = 2^{k+1}$, are the next integral power of 2 and have the same value as g_n, namely k

For example, all of the terms of the sequence from g_8 through g_{15} have the value 3 $(\because g_8 = 3)$

Chapter 5.1, Problem 9E

Problem

Compute the first fifteen terms of each of the sequences in 8 and 9, and describe the general behavior of these sequences in words. (A definition of logarithm is given in Section 7.1.)

$$h_n = n\lfloor \log_2 n \rfloor \text{ for all integers } n \geq 1.$$

Step-by-step solution

Step 1 of 15

It is given that $h_n = n\lfloor \log_2 n \rfloor$ for all integers $n \geq 1$

Now, we find the first fifteen terms of the sequence

(1) Substituting $n = 1$ into the equation, we get

$\log_2 1 = 0$

$\Rightarrow h_1 = 1\lfloor \log_2 1 \rfloor = 1\lfloor 0 \rfloor = 1 \times 0 = 0$

$\therefore h_1 = 0$

Step 2 of 15

(2) Substituting $n = 2$ into the equation, we get

$\log_2 2 = 1$

$\Rightarrow h_2 = 2\lfloor \log_2 2 \rfloor = 2 \times \lfloor 1 \rfloor = 2 \times 1 = 2$

$\therefore h_2 = 2$

Step 3 of 15

(3) Substituting $n = 3$ into the equation, we get

$\log_2 3 = 1.5849$

$\Rightarrow h_3 = 3\lfloor \log_2 3 \rfloor = 3 \times \lfloor 1.5849 \rfloor = 3 \times 1 = 3 \quad [\because \lfloor x \rfloor = n \text{ if } n \leq x < n+1]$

$\therefore h_3 = 3$

Step 4 of 15

(4) Substituting $n = 4$ into the equation, we get

$\log_2 4 = \log_2 2^2 = 2\log_2 2 = 2 \times 1 = 2 \quad (\because \log a^b = b\log a)$

$\Rightarrow h_4 = 4\lfloor \log_2 4 \rfloor = 4 \times 2 = 8$

$\therefore h_4 = 8$

Step 5 of 15

(5) Substituting $n = 5$ into the equation, we get

$\log_2 5 = 2.3219$

$\Rightarrow h_5 = 5\lfloor \log_2 5 \rfloor = 5\lfloor 2.321 \rfloor 9 = 5 \times 2 = 10 \quad [\because \lfloor x \rfloor = n \text{ if } n \leq x < n+1]$

$\therefore h_5 = 10$

(6) Substituting $n = 6$ into the equation, we get

$\log_2 6 = 2.5849$

$\Rightarrow h_6 = 6\lfloor \log_2 6 \rfloor = 6\lfloor 2.5849 \rfloor = 6 \times 2 = 12 \quad [\because \lfloor x \rfloor = n \text{ if } n \leq x < n+1]$

$\therefore h_6 = 12$

Step 6 of 15

(7) Substituting $n = 7$ into the equation, we get

$\log_2 7 = 2.8073$

$\Rightarrow h_7 = 7\lfloor 2.8073 \rfloor = 7 \times 2 = 14 \quad [\because \lfloor x \rfloor = n \text{ if } n \leq x < n+1]$

$\therefore h_7 = 14$

Step 7 of 15

(8) Substituting $n = 8$ into the equation, we get

$\log_2 8 = \log_2 2^3 = 3\log_2 2 = 3 \times 1 = 2 \quad (\because \log a^b = b\log a)$

$\Rightarrow h_8 = 8\lfloor \log_2 2^3 \rfloor = 8 \times 3 = 24$

$\therefore h_8 = 24$

Step 8 of 15

(9) Substituting $n = 9$ into the equation, we get

$\log_2 9 = 3.1699$

$\Rightarrow h_9 = 9\lfloor \log_2 9 \rfloor = 9 \times \lfloor 3.1699 \rfloor = 9 \times 3 = 27 \quad [\because \lfloor x \rfloor = n \text{ if } n \leq x < n+1]$

$\therefore h_9 = 27$

Step 9 of 15

(10) Substituting $n = 10$ into the equation, we get

$\log_2 10 = 3.3219$

$\Rightarrow h_{10} = 10\lfloor \log_2 10 \rfloor$

$= 10 \times \lfloor 3.3219 \rfloor$

$= 10 \times 3 = 30 \quad [\because \lfloor x \rfloor = n \text{ if } n \leq x < n+1]$

$\therefore h_9 = 27$

Step 10 of 15

(11) Substituting $n = 11$ into the equation, we get

$\log_2 11 = 3.4594$

$\Rightarrow h_{11} = 11\lfloor \log_2 11 \rfloor = 11 \times \lfloor 3.4594 \rfloor = 11 \times 3 = 33 \quad [\because \lfloor x \rfloor = n \text{ if } n \leq x < n+1]$

Step 11 of 15

$\therefore h_{11} = 33$

(12) Substituting $n = 12$ into the equation, we get

$\log_2 12 = 3.5849$

$\Rightarrow h_{12} = 12\lfloor \log_2 12 \rfloor = 12 \times \lfloor 3.5849 \rfloor = 12 \times 3 = 36 \quad [\because \lfloor x \rfloor = n \text{ if } n \leq x < n+1]$

$\therefore h_{12} = 36$

Step 12 of 15

(13) Substituting $n = 13$ into the equation, we get

$\log_2 13 = 3.7004$

$\Rightarrow h_{13} = 13\lfloor \log_2 13 \rfloor = 13\lfloor 3.7004 \rfloor = 13 \times 3 = 39 \quad [\because \lfloor x \rfloor = n \text{ if } n \leq x < n+1]$

$\therefore h_{13} = 39$

Step 13 of 15

(14) Substituting $n = 14$ into the equation, we get

$\log_2 14 = 3.8073$

$\Rightarrow h_{14} = 14\lfloor \log_2 14 \rfloor = 14\lfloor 3.8073 \rfloor = 14 \times 3 = 42 \quad [\because \lfloor x \rfloor = n \text{ if } n \leq x < n+1]$

$\therefore h_{14} = 42$

Step 14 of 15

(15) Substituting $n = 15$ into the equation, we get

$\log_2 15 = 3.9068$

$\Rightarrow h_{15} = 15\lfloor \log_2 15 \rfloor = 15\lfloor 3.9068 \rfloor = 15 \times 3 = 45 \quad [\because \lfloor x \rfloor = n \text{ if } n \leq x < n+1]$

$\therefore h_{15} = 45$

Step 15 of 15

$\therefore$ The first fifteen terms of the sequence $h_n = n\lfloor \log_2 n \rfloor$ for all integers $n \geq 1$ are $0, 2, 3, 8, 10, 12, 14, 24, 27, 30, 33, 36, 39, 42, 45$

When n is an integral power of 2, h_n is the product of the exponent of that power and n.

For example, if $8 = 2^3$, then $h_8 = 8 \times 3 = 24$

Similarly, if $n = 2^k$, where k is an integer, then $h_n = n \times k$

All of the terms of the sequence from h_n up to h_m where $m = 2^{k+1}$ are the next integral power of 2, and the values are the product of n and the exponent k

For example, all of the terms of the sequence from h_8 through h_{15} are

$8 \times 3,\ 9 \times 3,\ 10 \times 3,\ 11 \times 3,\ 12 \times 3,\ 13 \times 3,\ 14 \times 3,\ 15 \times 3.$

Chapter 5.1, Problem 10E

Problem

Write the first four terms of the sequences defined by the formulas in.

Find explicit formulas for sequences of the form *a*1, *a2, a3,* ... with the initial terms.

Exercise

–1, 1, –1, 1, –1, 1

Step-by-step solution

Step 1 of 1

It is given that $-1,1,-1,1,-1,\text{ and }1$ are the initial terms of the sequence

Now, we find the formula for the sequence

We are given

$a_1=-1=(-1)^1$

$a_2=1=(-1)^2$

$a_3=-1=(-1)^3$

$a_4=1=(-1)^4$

$\therefore$ The formula for the sequence $-1,1,-1,1,-1,1$ is $a_n=(-1)^n$ for all integers $n\geq 1$

Chapter 5.1, Problem 11E

Problem

Find explicit formulas for sequences of the form *a*1, *a2, a3,* ... with the initial terms.

Exercise

0, 1, –2, 3, –4, 5

Step-by-step solution

Step 1 of 1

Consider the sequence $a_1, a_2, a_3, \ldots$ having 0, 1, –2, 3, –4, and 5 as the initial terms of the sequence.

Now, to find the explicit formula for the sequence determine the first six terms of sequence as follows:

$$a_1 = 0 = (-1)^1 (0)$$

$$a_2 = 1 = (-1)^{1+1} (1)$$

$$a_3 = -2 = (-1)^{2+1} (2)$$

$$a_4 = 3 = (-1)^{3+1} (3)$$

$$a_5 = -4 = (-1)^{4+1} (4)$$

$$a_6 = 5 = (-1)^{5+1} (5)$$

Therefore, formula for the sequence 0, 1, –2, 3, –4, 5 is:

$a_n = (-1)^{n+1} (n)$ for all integers $n \geq 0$

$a_n = n(-1)^{n+1}$ for all integers $n \geq 0$

Substitute the value $n = m - 1$ into the above equation:

$$n + 1 = m \quad \& \quad n \geq 0$$

Also,

$$m - 1 \geq 0$$
$$m \geq 1$$

Therefore, the explicit formula for the sequence is $\boxed{a_m = (-1)^m (m-1)}$ for all integers $m \geq 1$.

Chapter 5.1, Problem 12E

Problem

Find explicit formulas for sequences of the form *a1, a2, a3,* ... with the initial terms.

Exercise

$\frac{1}{4}, \frac{2}{9}, \frac{3}{16}, \frac{4}{25}, \frac{5}{36}, \frac{6}{49}$

Step-by-step solution

Step 1 of 3

It is given that $\frac{1}{4}, \frac{2}{9}, \frac{3}{16}, \frac{4}{25}, \frac{5}{36}$, and $\frac{6}{49}$ are the initial terms of the sequence.

Objective is to find the explicit formula for the given sequence.

The terms of the sequence are,

$$\begin{aligned} a_1 &= \frac{1}{4} \\ &= \frac{1}{2^2} \\ a_2 &= \frac{2}{9} \\ &= \frac{2}{3^2} \\ a_3 &= \frac{3}{16} \\ &= \frac{3}{4^2} \end{aligned}$$

Step 2 of 3

The calculation continues,

$$\begin{aligned} a_4 &= \frac{4}{25} \\ &= \frac{4}{5^2} \\ a_5 &= \frac{5}{36} \\ &= \frac{5}{6^2} \\ a_6 &= \frac{6}{49} \\ &= \frac{6}{7^2} \end{aligned}$$

Step 3 of 3

The sequence in the numerator:

$1, 2, 3, 4, 5, 6, ...$

This series is in arithmetic progression.

n^{th} Term of the sequence in the numerator is,

$a = 1,\ d = 2 - 1 = 1$

$$\begin{aligned} t_n &= 1 + (n-1)1 \\ &= n \end{aligned}$$

The sequence in denominator:

$4, 9, 16, 25, 36, 49, ...$

This is in the form $2^2, 3^2, 4^2, 5^2, 6^2, 7^2, ...$

$= (1+1)^2, (2+1)^2, (3+1)^2, (4+1)^2, (5+1)^2, (6+1)^2, ...$

The nth term in the denominator is $(n+1)^2$.

So, the formula for the sequence $\frac{1}{4}, \frac{2}{9}, \frac{3}{16}, \frac{4}{25}, \frac{5}{36}, \frac{6}{49}$ is $a_n = \frac{n}{(n+1)^2}$ for all integers $n \geq 1$.

Chapter 5.1, Problem 13E

Problem

Find explicit formulas for sequences of the form *a*1, *a2, a3,* ... with the initial terms.

Exercise

$1-\frac{1}{2}, \frac{1}{2}-\frac{1}{3}, \frac{1}{3}-\frac{1}{4}, \frac{1}{4}-\frac{1}{5}, \frac{1}{5}-\frac{1}{6}, \frac{1}{6}-\frac{1}{7}$

Step-by-step solution

Step 1 of 1

It is given that the initial terms of the sequence are $1-\frac{1}{2}, \frac{1}{2}-\frac{1}{3}, \frac{1}{3}-\frac{1}{4}, \frac{1}{4}-\frac{1}{5}, \frac{1}{5}-\frac{1}{6}, \frac{1}{6}-\frac{1}{7}$

Now, we find the formula for the sequence.

We are given

$$a_1 = 1-\frac{1}{2} = \frac{1}{1}-\frac{1}{2}$$

$$a_2 = \frac{1}{2}-\frac{1}{3}$$

$$a_3 = \frac{1}{3}-\frac{1}{4}$$

$$a_4 = \frac{1}{4}-\frac{1}{5}$$

$$a_5 = \frac{1}{5}-\frac{1}{6}$$

$$a_6 = \frac{1}{6}-\frac{1}{7}$$

$\therefore$ The formula for the sequence $1-\frac{1}{2}, \frac{1}{2}-\frac{1}{3}, \frac{1}{3}-\frac{1}{4}, \frac{1}{4}-\frac{1}{5}, \frac{1}{5}-\frac{1}{6}, \frac{1}{6}-\frac{1}{7}$ is

$a_n = \frac{1}{n}-\frac{1}{n+1}$ for all integers $n \geq 1$

Chapter 5.1, Problem 14E

Problem

Find explicit formulas for sequences of the form *a*1, *a2, a3,* ... with the initial terms.

Exercise

$\frac{1}{3}, \frac{4}{9}, \frac{9}{27}, \frac{16}{81}, \frac{25}{243}, \frac{36}{729}$

Step-by-step solution

Step 1 of 2

The initial terms of the given sequence are

$$a_1 = \frac{1}{3} = \frac{1}{3^1}$$
$$a_2 = \frac{4}{9} = \frac{2^2}{3^2}$$
$$a_3 = \frac{9}{27} = \frac{3^2}{3^3}$$
$$a_4 = \frac{16}{81} = \frac{4^2}{3^4}$$
$$a_5 = \frac{25}{243} = \frac{5^2}{3^5}$$
$$a_6 = \frac{36}{729} = \frac{6^2}{3^6}$$

Step 2 of 2

Therefore, if we continue this way we get the explicit formula for the sequence as

$$a_n = \frac{n^2}{3^n} \quad , \quad n \text{ is an integer and } n \geq 1 .$$

Chapter 5.1, Problem 15E

Problem

Find explicit formulas for sequences of the form *a1, a2, a3,* ... with the initial terms.

Exercise

$0, -\frac{1}{2}, \frac{2}{3}, -\frac{3}{4}, \frac{4}{5}, -\frac{5}{6}, \frac{6}{7}$

Step-by-step solution

Step 1 of 2

It is given that the initial terms of the sequence are $0, -\frac{1}{2}, \frac{2}{3}, \frac{-3}{4}, \frac{4}{5}, \frac{-5}{6}$, and $\frac{6}{7}$.

Objective is to find the explicit formula for this sequence.

Step 2 of 2

The terms of the sequence are as follows:

$$\begin{aligned} a_1 &= 0 \\ &= \frac{0}{1} \\ &= (-1)^0 \cdot \frac{0}{1} \end{aligned}$$

$$\begin{aligned} a_2 &= -\frac{1}{2} \\ &= (-1)^1 \cdot \frac{1}{2} \end{aligned}$$

$$\begin{aligned} a_3 &= \frac{2}{3} \\ &= (-1)^2 \cdot \frac{2}{3} \end{aligned}$$

$$\begin{aligned} a_4 &= -\frac{3}{4} \\ &= (-1)^3 \cdot \frac{3}{4} \end{aligned}$$

$$\begin{aligned} a_5 &= \frac{4}{5} \\ &= (-1)^4 \cdot \frac{4}{5} \end{aligned}$$

$$\begin{aligned} a_6 &= -\frac{5}{6} \\ &= (-1)^5 \cdot \frac{5}{6} \end{aligned}$$

$$\begin{aligned} a_7 &= \frac{6}{7} \\ &= (-1)^6 \cdot \frac{6}{7} \end{aligned}$$

Note that the denominator of each term equals to the subscript of the term and that the numerator equals to one less than the denominator.

The formula for the sequence $0, -\frac{1}{2}, \frac{2}{3}, \frac{-3}{4}, \frac{4}{5}, \frac{-5}{6}, \frac{6}{7}$ is $\boxed{a_n = (-1)^{n-1}\frac{n-1}{n}}$ for all integers $n \geq 1$.

Comments (2)

- isn't ((-1)^n)*(n/(n+1)) the same? if n>=0 i think it looks cleaner
- I concluded the same as above ^

Chapter 5.1, Problem 16E

Problem

Find explicit formulas for sequences of the form *a*1, *a2, a3,* ... with the initial terms.

Exercise

3, 6, 12, 24, 48, 96

Step-by-step solution

Step 1 of 1

It is given that the initial terms of the sequence are $3, 6, 12, 24, 48, \text{ and } 96$

Now, we find the formula for the sequence

We are given

$a_1 = 3 = 3 \times 1 = 3 \times 2^0$

$a_2 = 6 = 3 \times 2 = 3 \times 2^1$

$a_3 = 12 = 3 \times 4 = 3 \times 2^2$

$a_4 = 24 = 3 \times 8 = 3 \times 2^3$

$a_5 = 48 = 3 \times 16 = 3 \times 2^4$

$a_6 = 96 = 3 \times 32 = 3 \times 2^5$

$\therefore$ The formula for the sequence $3, 6, 12, 24, 48, 96$ is

$a_n = 3 \times 2^{n-1}$ for all integers $n \geq 1$

Chapter 5.1, Problem 17E

Problem

Consider the sequence defined by $a_n = \dfrac{2n + (-1)^n - 1}{4}$ for all integers $n \geq 0$.

Find an alternative explicit formula for *an* that uses the floor notation.

Step-by-step solution

Step 1 of 2

Consider that the sequence $\{a_n\}$ is defined as follows:

$a_n = \dfrac{2n + (-1)^n - 1}{4}$, for all integers $n \geq 0$. ..... (1)

The objective is to find an explicit formula for a_n that includes floor notation.

Suppose n is even.

Then $n = 2k$, for some integer k.

$$\begin{aligned} a_{2k} &= \frac{2(2k) + (-1)^{2k} - 1}{4} \\ &= \frac{4k + 1 - 1}{4} \\ &= \frac{4k}{4} \\ &= k \end{aligned}$$

Since $n = 2k$, so $k = \dfrac{n}{2}$.

Thus, $a_n = \dfrac{n}{2}$, if *n* is even.

Step 2 of 2

Suppose n is odd.

Then $n = 2k + 1$, for some integer k.

$$\begin{aligned} a_{2k+1} &= \frac{2(2k+1) + (-1)^{2k+1} - 1}{4} \\ &= \frac{4k + 2 - 1 - 1}{4} \\ &= \frac{4k}{4} \\ &= k \end{aligned}$$

Since $n = 2k + 1$, so $k = \dfrac{n-1}{2}$.

Thus, $a_n = \dfrac{n-1}{2}$, if *n* is odd.

Therefore, the formula for a_n can be written as follows:

$$a_n = \begin{cases} \dfrac{n}{2}, & n \text{ is even.} \\ \dfrac{n-1}{2}, & n \text{ is odd.} \end{cases}$$

Thus, by the definition of floor function, a_n is written as, $\boxed{a_n = \left\lfloor \dfrac{n}{2} \right\rfloor}$.

Chapter 5.1, Problem 18E

Problem

Let $a0 = 2$, $a1 = 3$, $a2 = -2$, $a3 = 1$, $a4 = 0$, $a5 = -1$, and $a6 = -2$. Compute each of the summations and products below.

a. $\sum_{i=0}^{6} a_i$

b. $\sum_{i=0}^{0} a_i$

c. $\sum_{j=1}^{3} a_{2j}$

d. $\prod_{k=0}^{6} a_k$

e. $\prod_{k=2}^{2} a_k$

Step-by-step solution

Step 1 of 5

Consider the terms of the sequence:

$a_0 = 2,\ a_1 = 3,\ a_2 = -2,\ a_3 = 1,\ a_4 = 0,\ a_5 = -1,\ \text{and}\ a_6 = -2$

(a)

Objective is to find the sum of the series $\sum_{i=0}^{6} a_i$.

The summation $\sum_{i=0}^{6} a_i$ is written as follows:

$$\sum_{i=0}^{6} a_i = a_0 + a_1 + a_2 + a_3 + a_4 + a_5 + a_6$$

$= 2 + 3 + (-2) + 1 + 0 + (-1) + (-2)$ Substitute the given values.

$= 5 + (-2) + 1 + (-1) + (-2)$

$= 6 + (-5)$

$= 1$

$$\sum_{i=0}^{6} a_i = 1.$$

Hence, the summation of the sequence $\sum_{i=0}^{6} a_i = \boxed{1}$.

Step 2 of 5

(b)

Objective is to find the sum of the sequence $\sum_{i=0}^{0} a_i$.

The summation $\sum_{i=0}^{0} a_i$ is written as follows:

$$\sum_{i=0}^{0} a_i = a_0$$

$= 2.$ Since $a_0 = 2$

Hence, the summation of the sequence $\sum_{i=0}^{0} a_i = \boxed{2}$.

Step 3 of 5

(c)

Objective is to find the value of $\sum_{j=1}^{3} a_{2j}$.

$$\sum_{j=1}^{3} a_{2j} = a_{2\times1} + a_{2\times2} + a_{2\times3};$$

$= a_2 + a_2 + a_6;$

$= -2 + 0 + (-2)$ Substitute the values.

$= -2 - 2$

$= -4$

Hence, the value of the sequence $\sum_{j=1}^{3} a_{2j} = \boxed{-4}$.

Step 4 of 5

(d)

Objective is to find the product of the sequence $\prod_{k=0}^{6} a_k$.

$$\prod_{K=0}^{6} a_k = a_0 \times a_1 \times a_2 \times a_3 \times a_4 \times a_5 \times a_6$$

$= 2 \times 3 \times (-2) \times 1 \times 0 \times (-1) \times -2$ Substitute the given values.

$= -24 \times 0$

$= 0$ Any number multiplied by zero is zero.

Hence, the value of the sequence $\prod_{K=0}^{6} a_k = \boxed{0}$.

Comments (1)

A of 2x2=A2 ??? Makes no sense

Step 5 of 5

(e)

Objective is to find the product of the sequence $\prod_{k=2}^{2} a_k$.

$$\prod_{k=2}^{2} a_k = a_2$$

$= -2$ Since $a_2 = -2$.

Hence, the value of the sequence $\prod_{k=2}^{2} a_k = \boxed{-2}$.

Chapter 5.1, Problem 19E

Problem

Compute the summations and products.

Exercise

$$\sum_{k=1}^{5}(k+1)$$

Step-by-step solution

Step 1 of 1

It is given that

$$\sum_{k=1}^{5}(k+1)=(1+1)+(2+1)+(3+1)+(4+1)+(5+1)$$

$$=2+3+4+5+6$$

$$=5+15=20$$

$$\therefore \sum_{k=1}^{5}(k+1)=20$$

Chapter 5.1, Problem 20E

Problem

Compute the summations and products.

Exercise

$$\prod_{k=2}^{4} k^2$$

Step-by-step solution

Step 1 of 1

It is given that

$$\prod_{k=2}^{4} k^2 = 2^2 \times 3^2 \times 4^2$$

$$= 4 \times 9 \times 16$$

$$= 36 \times 16$$

$$= 576$$

$$\prod_{k=2}^{4} k^2 = 576$$

Chapter 5.1, Problem 20E

Problem

Compute the summations and products.

Exercise

$$\prod_{k=2}^{4} k^2$$

Step-by-step solution

Step 1 of 1

It is given that

$$\prod_{k=2}^{4} k^2 = 2^2 \times 3^2 \times 4^2$$

$$= 4 \times 9 \times 16$$

$$= 36 \times 16$$

$$= 576$$

$$\prod_{k=2}^{4} k^2 = 576$$

Chapter 5.1, Problem 21E

Problem

Compute the summations and products $\sum_{k=1}^{3}(k^2+1)$

Step-by-step solution

Step 1 of 2

Consider the following summation.

$$\sum_{k=1}^{3}\left(k^2+1\right).$$

The main objective of this problem is to compute the value of the above summation.

Step 2 of 2

Calculate the value of summation as follows:

$$\begin{aligned}\sum_{k=1}^{3}\left(k^2+1\right) &= \left(1^2+1\right)+\left(2^2+1\right)+\left(3^2+1\right)\\ &= (1+1)+(4+1)+(9+1)\\ &= 2+5+10\\ &= 17\end{aligned}$$

Thus, the required value of the summation is <u>17</u>.

Chapter 5.1, Problem 22E

Problem

Compute the summations and products.

Exercise

$$\prod_{j=0}^{4}(-1)^j$$

Step-by-step solution

Step 1 of 1

It is given that

$$\prod_{j=0}^{4}(-1)^j = (-1)^0 \times (-1)^1 \times (-1)^2 \times (-1)^3 \times (-1)^4$$

$$= 1 \times -1 \times 1 \times -1 \times 1 \qquad \left(\because (-1)^n = 1 \text{ if } n \text{ is even}\right)$$

$$= -1 \times 1 \times -1 \times 1 \qquad \left(\because = -1 \text{ if } n \text{ is odd}\right)$$

$$= -1 \times -1 \times 1 \qquad \begin{pmatrix} \because -1 \times 1 = -1 \text{ and} \\ -1 \times -1 = 1 \end{pmatrix}$$

$$= 1 \times 1$$

$$= 1$$

$$\Rightarrow \sum_{j=0}^{4}(-1)^j = 1$$

Chapter 5.1, Problem 23E

Problem

Compute the summations and products.

Exercise

$$\sum_{i=1}^{1} i(i+1)$$

Step-by-step solution

Step 1 of 1

Consider the summation $\sum_{i=1}^{1} i(i+1)$.

Objective is to find the given summation $\sum_{i=1}^{1} i(i+1)$.

$$\sum_{i=1}^{1} i(i+1) = 1(1+1)$$
$$= 1 \times 2$$
$$= 2$$

Therefore, the value of the summation $\sum_{i=1}^{1} i(i+1) = \boxed{2}$.

Chapter 5.1, Problem 24E

Problem

Compute the summations and products.

Exercise

$$\sum_{j=0}^{0}(j+1)\cdot 2^{j}$$

Step-by-step solution

Step 1 of 1

It is given that $\sum_{j=0}^{0}(j+1)\cdot 2^{j}=(0+1)\cdot 2^{0}$

$=1\times 1 \qquad (\because 2^{0}=1 \text{ and } 0+1=1)$

$=1$

$\therefore \sum_{j=0}^{0}(j+1)\cdot 2^{j}=1$

Chapter 5.1, Problem 25E

Problem

Compute the summations and products.

Exercise

$$\prod_{k=2}^{2}\left(1-\frac{1}{k}\right)$$

Step-by-step solution

Step 1 of 1

Consider the product $\prod_{k=2}^{2}\left(1-\frac{1}{k}\right)$.

Objective is to find the product of the sequence $\prod_{k=2}^{2}\left(1-\frac{1}{k}\right)$.

$$\prod_{k=2}^{2}\left(1-\frac{1}{k}\right)=1-\frac{1}{2}$$

$$=\frac{1}{1}-\frac{1}{2}$$

$$=\frac{2-1}{2}$$

$$=\frac{1}{2} \qquad \text{(Since The LCM of 1 and 2 is 2)}$$

Hence, the value of the product $\prod_{k=2}^{2}\left(1-\frac{1}{k}\right)=\boxed{\frac{1}{2}}$.

Chapter 5.1, Problem 26E

Problem

Compute the summations and products.

Exercise

$$\sum_{k=-1}^{1}(k^2+3)$$

Step-by-step solution

Step 1 of 2

Consider the summation as,

$$\sum_{k=-1}^{1}\left(k^2+3\right).$$

The objective is to compute the value of the above summation.

Step 2 of 2

Use the definition of summation to evaluate the above sum.

$$\begin{aligned}\sum_{k=-1}^{1}\left(k^2+3\right) &= \left((-1)^2+3\right)+\left((0)^2+3\right)+\left((1)^2+3\right) \text{ (Substitute } k=-1,0,1 \text{ and add them)}\\ &= (1+3)+(3)+(1+3)\\ &= 4+3+4\\ &= 11\end{aligned}$$

Therefore, the required value of the summation is,

$$\sum_{k=-1}^{1}\left(k^2+3\right)=\boxed{11}.$$

Chapter 5.1, Problem 27E

Problem

Compute the summations and products.

Exercise

$$\sum_{n=1}^{10}\left(\frac{1}{n}-\frac{1}{n+1}\right)$$

Step-by-step solution

Step 1 of 2

The objective is to compute the summation of $\sum_{n=1}^{10}\left(\frac{1}{n}-\frac{1}{n+1}\right)$.

Rewrite the summation $\sum_{n=1}^{10}\left(\frac{1}{n}-\frac{1}{n+1}\right)$ as:

$$\begin{aligned}\sum_{n=1}^{10}\left(\frac{1}{n}-\frac{1}{n+1}\right)&=\left(\frac{1}{1}-\frac{1}{1+1}\right)+\left(\frac{1}{2}-\frac{1}{2+1}\right)+\left(\frac{1}{3}-\frac{1}{3+1}\right)+\left(\frac{1}{4}-\frac{1}{4+1}\right)\\&+\left(\frac{1}{5}-\frac{1}{5+1}\right)+\left(\frac{1}{6}-\frac{1}{6+1}\right)+\left(\frac{1}{7}-\frac{1}{7+1}\right)+\left(\frac{1}{8}-\frac{1}{8+1}\right)\\&+\left(\frac{1}{9}-\frac{1}{9+1}\right)+\left(\frac{1}{10}-\frac{1}{10+1}\right)\end{aligned}$$

Step 2 of 2

Simplify the terms as:

$$\begin{aligned}\sum_{n=1}^{10}\left(\frac{1}{n}-\frac{1}{n+1}\right)&=1-\cancel{\frac{1}{2}}+\cancel{\frac{1}{2}}-\cancel{\frac{1}{3}}+\cancel{\frac{1}{3}}-\cancel{\frac{1}{4}}+\cancel{\frac{1}{4}}-\cancel{\frac{1}{5}}+\cancel{\frac{1}{5}}-\cancel{\frac{1}{6}}+\cancel{\frac{1}{6}}-\cancel{\frac{1}{7}}+\cancel{\frac{1}{7}}\\&-\cancel{\frac{1}{8}}+\cancel{\frac{1}{8}}-\cancel{\frac{1}{9}}+\cancel{\frac{1}{9}}-\cancel{\frac{1}{10}}+\cancel{\frac{1}{10}}-\frac{1}{11}\\&=1-\frac{1}{11}\\&=\frac{11-1}{11}\\&=\frac{10}{11}\end{aligned}$$

Therefore, the sum of $\sum_{n=1}^{10}\left(\frac{1}{n}-\frac{1}{n+1}\right)$ is $\boxed{\frac{10}{11}}$.

Chapter 5.1, Problem 28E

Problem

Compute the summations and products.

Exercise

$$\prod_{i=2}^{5} \frac{i(i+2)}{(i-1)\cdot(i+1)}$$

Step-by-step solution

Step 1 of 2

Consider the following product as,

$$\prod_{i=2}^{5} \frac{i(i+2)}{(i-1)\cdot(i+1)} \text{ ..... } \textbf{(1)}$$

The objective is to compute the above product.

Step 2 of 2

Substitute the values of i from 2 to 5 in expression (1) and also use the definition

$$\prod_{k=m}^{n} a_k = a_m \cdot a_{m+1} \cdot a_{m+2} \cdots a_n.$$

$$\begin{aligned}\prod_{i=2}^{5} \frac{i(i+2)}{(i-1)\cdot(i+1)} &= \frac{2(2+2)}{(2-1)\cdot(2+1)} \times \frac{3(3+2)}{(3-1)\cdot(3+1)} \times \frac{4(4+2)}{(4-1)\cdot(4+1)} \times \frac{5(5+2)}{(5-1)\cdot(5+1)} \\ &= \frac{2\times4}{1\times3} \times \frac{3\times5}{2\times4} \times \frac{4\times6}{3\times5} \times \frac{5\times7}{4\times6}\end{aligned}$$

$$= \frac{2\times4\times3\times5\times4\times6\times5\times7}{1\times3\times2\times4\times3\times5\times4\times6}$$

$$= \frac{5\times7}{1\times3}$$

$$= \frac{35}{3}$$

Therefore, the required value of the product is,

$$\prod_{i=2}^{5} \frac{i(i+2)}{(i-1)(i+1)} = \boxed{\frac{35}{3}}.$$

Chapter 5.1, Problem 29E

Problem

Write the summations in expanded form.

Exercise

$$\sum_{i=1}^{n}(-2)^i$$

Step-by-step solution

Step 1 of 1

Here the expression is

$$\sum_{i=1}^{n}(-2)^i$$

We have from definition that the summation of $\sum_{k=m}^{n} a^k$ is given as

$$\sum_{k=m}^{n} a^k = a^m + a^{m+1} + a^{m+2} + \ldots + a^n$$

Therefore, the expanded form is given as below:

$$\begin{aligned}\sum_{i=1}^{n}(-2)^i &= (-2)^1 + (-2)^2 + (-2)^3 + \ldots + (-2)^n \\ &= (-2) + (4) + (-8) + \ldots + (-1)^n (2^n) \\ &= \boxed{-2 + 4 - 8 + \ldots + (-1)^n 2^n}\end{aligned}$$

Chapter 5.1, Problem 30E

Problem

Write the summations in expanded form.

Exercise

$$\sum_{j=1}^{n} j(j+1)$$

Step-by-step solution

Step 1 of 1

It is given that

$$\sum_{j=1}^{n} j(j+1) = 1(1+1)+2(2+1)+3(3+1)+4(4+1)+\ldots\ldots\ldots\ldots+n(n+1)$$

$$= 1\cdot 2+2\cdot 3+3\cdot 4+4\cdot 5+\ldots\ldots\ldots\ldots+n(n+1)$$

$$\therefore \sum_{j=1}^{n} j(j+1) = 1\cdot 2+2\cdot 3+3\cdot 4+4\cdot 5\ldots\ldots\ldots\ldots+n(n+1)$$

Chapter 5.1, Problem 31E

Problem

Write the summations in expanded form.

Exercise

$$\sum_{k=0}^{n+1} \frac{1}{k!}$$

Step-by-step solution

Step 1 of 1

Here the expression is

$$\sum_{k=0}^{n+1} \frac{1}{k!}$$

We have from definition that the summation of $\sum_{k=m}^{n} a^k$ is given as

$$\sum_{k=m}^{n} a^k = a^m + a^{m+1} + a^{m+2} + \ldots + a^n$$

Therefore, the expanded form is given as below:

$$\begin{aligned}\sum_{k=0}^{n+1} \frac{1}{k!} &= \frac{1}{0!} + \frac{1}{1!} + \frac{1}{2!} + \ldots + \frac{1}{(n+1)!} \\ &= \boxed{1 + 1 + \frac{1}{2!} + \ldots + \frac{1}{(n+1)!}}\end{aligned}$$

Chapter 5.1, Problem 32E

Problem

Write the summations in expanded form.

Exercise

$$\sum_{i=1}^{k+1} i(i!)$$

Step-by-step solution

Step 1 of 1

Consider the summation:

$$\sum_{i=1}^{k+1} i(i!).$$

Objective is to write this summation in expanded form.

Write the given sequence $\sum_{i=1}^{k+1} i(i!)$ in expanding form.

Since $\sum_{i=1}^{k+1}$ is the sum of given term define with respect to i range from 1 to $(k+1)$.

Therefore, in expanding form $\sum_{i=1}^{k+1} i(i!)$ can be written as follows:

$$\sum_{i=1}^{k+1} i(i!) = \boxed{1(1!)+2(2!)+3(3!)+4(4!)+5(5!)+\cdots+k(k!)+(k+1)(k+1)!}.$$

Chapter 5.1, Problem 33E

Problem

Evaluate the summations and products in the indicated values of the variable.

Exercise

$\frac{1}{1^2}+\frac{1}{2^2}+\frac{1}{3^2}+\ldots+\frac{1}{n^2};\ n=1$

Step-by-step solution

Step 1 of 1

Consider the summation:

$$\frac{1}{1^2}+\frac{1}{2^2}+\frac{1}{3^2}+\cdots+\frac{1}{n^2}$$

Objective is to find the value of this summation for $n=1$.

Take the value $n=1$.

The given sum has only one term.

That is the first term of the summation.

Hence, the sum is $\frac{1}{1^2}=\boxed{1}$.

Chapter 5.1, Problem 34E

Problem

Evaluate the summations and products in the indicated values of the variable.

Exercise

$1(1!) + 2(2!) + 3(3!) + \ldots + m(m!);\ m = 2$

Step-by-step solution

Step 1 of 1

In this problem we have to evaluate the given sum

$$1(1!)+2(2!)+3(3!)+\ldots\ldots\ldots+m(m!);\ m=2.$$

Since for $m = 2$, the given sum has only two term, i.e. first two term and hence the sum is

$$\begin{aligned} 1(1!)+2(2!) &= 1.1+2.(2.1) \qquad [2! = 2.1] \\ &= 1+4 \\ &= 5 \end{aligned}$$

$$\therefore 1(1!)+2(2!) = 5$$

Chapter 5.1, Problem 35E

Problem

Evaluate the summations and products in the indicated values of the variable.

Exercise

$$\left(\frac{1}{1+1}\right)\left(\frac{2}{2+1}\right)\left(\frac{3}{3+1}\right)\cdots\left(\frac{k}{k+1}\right);\ k=3$$

Step-by-step solution

Step 1 of 1

Consider the product:

$$\left(\frac{1}{1+1}\right)\left(\frac{2}{2+1}\right)\left(\frac{3}{3+1}\right)\cdots\left(\frac{k}{k+1}\right)$$

Objective is to find the product for $k=3$.

Since for $k=3$, the given product has only three terms.

That is, the product of first three terms.

Hence, the product of the first three terms is as follows:

$$\begin{aligned}\left(\frac{1}{1+1}\right)\left(\frac{2}{2+1}\right)\left(\frac{3}{3+1}\right) &= \frac{1}{\cancel{2}}\times\frac{\cancel{2}}{\cancel{3}}\times\frac{\cancel{3}}{4}\\ &= \boxed{\frac{1}{4}}.\end{aligned}$$

Chapter 5.1, Problem 36E

Problem

Evaluate the summations and products in the indicated values of the variable.

Exercise

$\left(\frac{1\cdot 2}{3\cdot 4}\right)\left(\frac{4\cdot 5}{6\cdot 7}\right)\left(\frac{6\cdot 7}{8\cdot 9}\right)\cdots\left(\frac{m\cdot(m+1)}{(m+2)\cdot(m+3)}\right);\ m=1$

Step-by-step solution

Step 1 of 3

Consider the following product of sequence:

$$\left(\frac{1\cdot 2}{3\cdot 4}\right)\left(\frac{4\cdot 5}{6\cdot 7}\right)\left(\frac{6\cdot 7}{8\cdot 9}\right)\cdots\left(\frac{m\cdot(m+1)}{(m+2)\cdot(m+3)}\right).$$

Evaluate the product for $m=1$.

The **product notation** for the given product of sequence is as follows:

$$\prod_{k=1}^{m}\left(\frac{k\cdot(k+1)}{(k+2)\cdot(k+3)}\right).$$

Step 2 of 3

For $m=1$, the given product has only one term. Substitute $m=1$ in the product notation.

$$\prod_{k=1}^{m}\left(\frac{k\cdot(k+1)}{(k+2)\cdot(k+3)}\right)=\prod_{k=1}^{1}\left(\frac{k\cdot(k+1)}{(k+2)\cdot(k+3)}\right)$$

$$=\frac{1\cdot(1+1)}{(1+2)\cdot(1+3)}\quad \text{Since, } \prod_{k=n}^{n}a_k=a_n$$

$$=\frac{1\cdot 2}{(3).(4)}$$

$$=\frac{2}{12}$$

$$=\boxed{\frac{1}{6}}.$$

Step 3 of 3

Or simply, when $m=1$, the value of the given product of sequence is,

$$\left(\frac{m\cdot(m+1)}{(m+2)\cdot(m+3)}\right)=\left(\frac{1\cdot(1+1)}{(1+2)\cdot(1+3)}\right)$$

$$=\frac{1\cdot 2}{3\cdot 4}$$

$$=\frac{2}{12}$$

$$=\boxed{\frac{1}{6}}.$$

Chapter 5.1, Problem 37E

Problem

Write a single summation.

Exercise

$$\sum_{i=1}^{k} i^3 + (k+1)^3$$

Step-by-step solution

Step 1 of 1

We have to rewrite the given sequence $\sum_{i=1}^{k} i^3 + (k+1)^3$ as a single term summation.

Note that when $i = k+1$, $i^3 = (k+1)^3$.

Therefore,

$$\sum_{i=1}^{k} i^3 + (k+1)^3 = \sum_{i=1}^{k+1} i^3$$

Chapter 5.1, Problem 38E

Problem

Write a single summation.

Exercise

$$\sum_{k=1}^{m} \frac{k}{k+1} + \frac{m+1}{m+2}$$

Step-by-step solution

Step 1 of 1

We have to rewrite the given sequence $\sum_{k=1}^{m} \frac{k}{k+1} + \frac{m+1}{m+2}$ as a single term summation.

Note that when $k = m+1$, $\frac{k}{k+1} = \frac{m+1}{m+2}$.

Therefore,

$$\sum_{k=1}^{m} \frac{k}{k+1} + \frac{m+1}{m+2} = \sum_{k=1}^{m+1} \frac{k}{k+1}$$

Chapter 5.1, Problem 39E

Problem

Write a single summation.

Exercise

$$\sum_{m=0}^{n}(m+1)2^m + (n+2)2^{n+1}$$

Step-by-step solution

Step 1 of 1

We have to rewrite the given sequence $\sum_{m=0}^{n}(m+1)2^m + (n+2)2^{n+1}$ as a single term summation.

Note that when $m = n+1$, $(m+1)2^m = (n+2)2^{n+1}$.

Therefore,

$$\sum_{m=0}^{n}(m+1)2^m + (n+2)2^{n+1} = \sum_{m=0}^{n+1}(m+1)2^m$$

Chapter 5.1, Problem 40E

Problem

Rewrite by separating off the final term.

Exercise

$$\sum_{i=1}^{k+1} i(i!)$$

Step-by-step solution

Step 1 of 1

We have to rewrite the given sequence $\sum_{i=1}^{k+1} i(i!)$ by separating final term. Sine we get the final term when $i = k+1$.

Therefore,

$$\sum_{i=1}^{k+1} i(i!) = \sum_{i=1}^{k} i(i!) + (k+1)((k+1)!)$$

Chapter 5.1, Problem 41E

Problem

Rewrite by separating off the final term.

Exercise

$$\sum_{k=1}^{m+1} k^2$$

Step-by-step solution

Step 1 of 2

3434-4.4-38E SA 1906

Step 2 of 2

We have to rewrite the given sequence $\sum_{k=1}^{m+1} k^2$ by separating final term. Since we get the final term when $k = m+1$. Therefore,

$$\sum_{k=1}^{m+1} k^2 = \sum_{k=1}^{m} k^2 + (m+1)^2$$

Chapter 5.1, Problem 42E

Problem

Rewrite by separating off the final term.

Exercise

$$\sum_{m=1}^{n+1} m(m+1)$$

Step-by-step solution

Step 1 of 2

Consider the following summation:

$$\sum_{m=1}^{n+1} m(m+1).$$

Rewrite the summation by separating off the final term.

Recall, the **Recursive definition of summation**:

Suppose m is any integer, then the following holds true:

1. $\sum_{k=m}^{m} a_k = a_m$, and,
2. $\sum_{k=m}^{n} a_k = \sum_{k=m}^{n-1} a_k + a_n$

For all integers $n > m$.

Step 2 of 2

Assume, $a_m = m(m+1)$. Then, the given summation can be written as follows:

$$\sum_{m=1}^{n+1} a_m$$

Here, $a_m = m(m+1)$.

Apply, the Recursive definition of summation (2).

$$\begin{aligned}
\sum_{m=1}^{n+1} a_m &= \sum_{m=1}^{n} a_m + a_{n+1} \\
&= \sum_{m=1}^{n} m(m+1) + [(n+1)((n+1)+1)] && \text{Since, } a_m = m(m+1). \\
&= \sum_{m=1}^{n} m(m+1) + [(n+1)(n+1+1)] \\
&= \sum_{m=1}^{n} m(m+1) + [(n+1)(n+2)]
\end{aligned}$$

Therefore, the summation after separating off the final term is as follows:

$$\sum_{m=1}^{n+1} m(m+1) = \boxed{\sum_{m=1}^{n} m(m+1) + [(n+1)(n+2)]}.$$

Chapter 5.1, Problem 43E

Problem

Write using summation or product notation.

Exercise

12 –22 + 32 –42 + 52 –62 + 72

Step-by-step solution

Step 1 of 2

Consider an expression $1^2 - 2^2 + 3^2 - 4^2 + 5^2 - 6^2 + 7^2$

The objective is to write the expression using the summation or product notation.

Step 2 of 2

The given expression can be written as,

$$\begin{aligned}
1^2 - 2^2 + 3^2 - 4^2 + 5^2 - 6^2 + 7^2 &= (1)1^2 + (-1)2^2 + (1)3^2 + (-1)4^2 + (1)5^2 + (-1)6^2 + (1)7^2 \\
&= (-1)^2 1^2 + (-1)^3 2^2 + (-1)^4 3^2 + (-1)^5 4^2 + (-1)^6 5^2 \\
&\quad + (-1)^7 6^2 + (-1)^8 7^2 \\
&= (-1)^{1+1} 1^2 + (-1)^{2+1} 2^2 + (-1)^{3+1} 3^2 + (-1)^{4+1} 4^2 + (-1)^{5+1} 5^2 \\
&\quad + (-1)^{6+1} 6^2 + (-1)^{7+1} 7^2 \\
&= \sum_{k=1}^{7} (-1)^{k+1} k^2
\end{aligned}$$

Therefore, $1^2 - 2^2 + 3^2 - 4^2 + 5^2 - 6^2 + 7^2 = \sum_{k=1}^{7} (-1)^{k+1} k^2$.

Chapter 5.1, Problem 44E

Problem

Write using summation or product notation.

Exercise

(13 –1) –(23 –1) + (33 –1) –(43 –1) + (53 –1)

Step-by-step solution

Step 1 of 2

Let us assume that the expression is:

$$\left(1^3-1\right)-\left(2^3-1\right)+\left(3^3-1\right)-\left(4^3-1\right)+\left(5^3-1\right)$$

Now the general term of this summation can be expressed as:

$(-1)^{k+1}\left(k^3-1\right)$ for some integer k from 1 to 5.

Hence, the given expression can be written by using summation notation as:

$$\sum_{k=1}^{5}(-1)^{k+1}\left(k^3-1\right)$$

Step 2 of 2

Again, the general term of this summation can be written in another way:

$(-1)^{k}\left((k+1)^3-1\right)$ for some integer k from 0 to 4.

Hence, the given expression can be written by using summation notation as:

$$\sum_{k=0}^{6}(-1)^{k}\left((k+1)^3-1\right)$$

Chapter 5.1, Problem 45E

Problem

Write using summation or product notation.

Exercise

(22 –1)• (32 –1) • (42—1)

Step-by-step solution

Step 1 of 2

Consider the expression $\left(2^2-1\right)\cdot\left(3^2-1\right)\cdot\left(4^2-1\right)$.

The objective is to write the product notation of the given expression.

Step 2 of 2

Write the product notation of the expression as,

$$\left(2^2-1\right)\left(3^2-1\right)\left(4^2-1\right)=\prod_{k=2}^{4}\left(k^2-1\right)$$

Therefore, the product notation is $\prod_{k=2}^{4}\left(k^2-1\right)$.

Chapter 5.1, Problem 46E

Problem

Write using summation or product notation.

Exercise

$$\frac{2}{3\cdot 4}-\frac{3}{4\cdot 5}+\frac{4}{5\cdot 6}-\frac{5}{6\cdot 7}+\frac{6}{7\cdot 8}$$

Step-by-step solution

Step 1 of 1

Consider the sequence $\frac{2}{3\times 4}-\frac{3}{4\times 5}+\frac{4}{5\times 6}-\frac{5}{6\times 7}+\frac{6}{7\times 8}$.

Objective is to write this sequence in summation notation.

It is given that $\frac{2}{3\times 4}-\frac{3}{4\times 5}+\frac{4}{5\times 6}-\frac{5}{6\times 7}+\frac{6}{7\times 8}$

$$=\frac{2}{3\times 4}+(-1)\frac{3}{4\times 5}+\frac{4}{5\times 6}+(-1)\frac{5}{6\times 7}+\frac{6}{7\times 8}$$

$$=(-1)^2\frac{2}{3\times 4}+(-1)^3\frac{3}{4\times 5}+(-1)^4\frac{4}{5\times 6}+(-1)^5\frac{5}{6\times 7}+(-1)^6\frac{6}{7\times 8}$$

$$=(-1)^2\frac{2}{(2+1)\times(2+2)}+(-1)^3\frac{3}{(3+1)\times(3+2)}+(-1)^4\frac{4}{(4+1)\times(4+2)}$$

$$+(-1)^5\frac{5}{(5+1)\times(5+2)}+(-1)^6\frac{6}{(6+1)\times(6+2)}$$

$$=\sum_{k=2}^{6}(-1)^k\frac{k}{(k+1)(k+2)}.$$

Hence, the summation notation for the given sequence:

$$\frac{2}{3\times 4}-\frac{3}{4\times 5}+\frac{4}{5\times 6}-\frac{5}{6\times 7}+\frac{6}{7\times 8}=\boxed{\sum_{k=2}^{6}(-1)^k\frac{k}{(k+1)(k+2)}}.$$

Chapter 5.1, Problem 47E

Problem

Write using summation or product notation.

Exercise

1 –*r* + *r*2 –*r*3 + *r*4 –*r*5

Step-by-step solution

Step 1 of 1

Consider the sequence $1-r+r^2-r^3+r^4-r^5$.

Objective is to write the given sequence in summation notation.

It is given that,

$$\begin{aligned}
&1-r+r^2-r^3+r^4-r^5\\
&=1+(-1)r+r^2+(-1)r^3+r^4+(-1)r^5\\
&=(-1)^0 1+(-1)^1 r+(-1)^2 r^2+(-1)^3 r^3+(-1)^4 r^4+(-1)^5 r^5\\
&=\sum_{k=0}^{5}(-1)^k r^k.
\end{aligned}$$

Hence, the summation notation of the sequence is,

$$1-r+r^2-r^3+r^4-r^5=\boxed{\sum_{k=0}^{5}(-1)^k r^k}.$$

Chapter 5.1, Problem 48E

Problem

Write using summation or product notation.

Exercise

(1 –*t*) • (1 –*t*2)•(1 –*t*3) • (1 –*t*4)

Step-by-step solution

Step 1 of 2

Consider the following expression:

$$(1-t)\cdot(1-t^2)\cdot(1-t^3)\cdot(1-t^4).$$

Remember that, the notation for the product of a sequence of numbers analogous to the notation for their sum, $\prod$ denotes the product.

$$\prod_{k=1}^{4} a_k = a_1 a_2 a_3 a_4$$

Step 2 of 2

To write the product notation for $(1-t)\cdot(1-t^2)\cdot(1-t^3)\cdot(1-t^4)$.

The general term of this product can be expressed as $1-t^k$, for integers *k* from 1 to 4.

$(1-t)\cdot(1-t^2)\cdot(1-t^3)\cdot(1-t^4) = (1-t^1)\cdot(1-t^2)\cdot(1-t^3)\cdot(1-t^4)$ Write $t = t^1$

$$(1-t)\cdot(1-t^2)\cdot(1-t^3)\cdot(1-t^4) = \boxed{\prod_{k=1}^{4}(1-t^k)}$$

Chapter 5.1, Problem 49E

Problem

Write using summation or product notation.

Exercise

13 + 23 + 33 + … + *n*3

Step-by-step solution

Step 1 of 1

Consider the sequence $1^3+2^3+3^3+.....+n^3$

The objective is to write the given sequence in summation notation.

It is given that $1^3+2^3+3^3+.....+n^3$

$=\sum_{k=1}^{n}k^3$.

Hence, the summation notation of the given sequence is,

$$1^3+2^3+3^3+.....+n^3=\boxed{\sum_{k=1}^{n}k^3}.$$

Chapter 5.1, Problem 51E

Problem

Write using summation or product notation.

Exercise

$n + (n - 1) + (n - 2) + \ldots + 1$

Step-by-step solution

Step 1 of 1

It is given that

$$n+(n-1)+(n-2)+.....+1$$

$$=(n-0)+(n-1)+(n-2)+.....+(n-(n-1))$$

$$=\sum_{k=0}^{n-1}(n-k)$$

$$\therefore n+(n-1)+(n-2)+.....+1=\sum_{k=0}^{n-1}(n-k)$$

Chapter 5.1, Problem 52E

Problem

Write using summation or product notation.

Exercise

$$n+\frac{n-1}{2!}+\frac{n-2}{3!}+\frac{n-3}{4!}+\cdots+\frac{1}{n!}$$

Step-by-step solution

Step 1 of 1

Consider the sequence $n+\frac{n-1}{2!}+\frac{n-2}{3!}+\frac{n-3}{4!}+\cdots+\frac{1}{n!}$.

The objective is to write the summation notation of the given sequence.

It is given that,

$$\begin{aligned}
&n+\frac{n-1}{2!}+\frac{n-2}{3!}+\frac{n-3}{4!}+\cdots+\frac{1}{n!}\\
&=\frac{n-0}{1}+\frac{n-1}{2!}+\frac{n-2}{3!}+\frac{n-3}{4!}+\cdots+\frac{n-(n-1)}{n!}\\
&=\frac{n-0}{1!}+\frac{n-1}{2!}+\frac{n-2}{3!}+\frac{n-3}{4!}+\cdots+\frac{n-(n-1)}{n!}\\
&=\sum_{k=0}^{n-1}\frac{n-k}{(k+1)!}
\end{aligned}$$

Hence, the summation notation of the given sequence is,

$$n+\frac{n-1}{2!}+\frac{n-2}{3!}+\frac{n-3}{4!}+\cdots+\frac{1}{n!}=\boxed{\sum_{k=0}^{n-1}\frac{n-k}{(k+1)!}}.$$

Chapter 5.1, Problem 53E

Problem

Transform making the change of variable $i = k + 1$.

Exercise

$$\sum_{k=0}^{5} k(k-1)$$

Step-by-step solution

Step 1 of 2

Consider the sequence $\sum_{k=0}^{5} k(k-1)$.

The objective is to transform this sequence by changing the variable, $i = k+1$.

It is given that $\sum_{k=0}^{5} k(k-1)$

Let $i = k+1$.

This gives, $k = i-1$.

If $k = 0$, then $i = 0+1$

$i = 1$

If $k = 5$, then $i = 5+1$

$i = 6$

Step 2 of 2

Calculate the value of $k(k-1)$.

$$k(k-1) = (i-1)(i-1-1) \qquad (\text{Since } k = i-1)$$

$$= (i-1)(i-2).$$

Hence, the transformed sequence is as follows:

$$\sum_{k=0}^{5} k(k-1) = \boxed{\sum_{i=1}^{6} (i-1)(i-2)}.$$

Chapter 5.1, Problem 54E

Problem

Transform making the change of variable $i = k + 1$.

Exercise

$$\prod_{k=1}^{n} \frac{k}{k^2+4}$$

Step-by-step solution

Step 1 of 1

It is given that

$$\prod_{k=1}^{n} \frac{k}{k^2+4}$$

It is also given that $i = k+1 \Rightarrow k = i-1$

Now,

If $k = 1$, then $i = 1+1 = 2 \Rightarrow i = 2$

If $k = n$, then $i = n+1$

And

$$\frac{k}{k^2+4} = \frac{(i-1)}{(i-1)^2+4} \quad (\because k = i-1)$$

$$\therefore \prod_{k=1}^{n} \frac{k}{k^2+4} = \prod_{i=2}^{n+1} \frac{i-1}{(i-1)^2+4}$$

Chapter 5.1, Problem 55E

Problem

Transform making the change of variable $j = i - 1$.

Exercise

$$\sum_{i=1}^{n+1} \frac{(i-1)^2}{i \cdot n}$$

Step-by-step solution

Step 1 of 2

Consider the sequence $\sum_{i=1}^{n+1} \frac{(i-1)^2}{i \cdot n}$.

The objective is to transform the given sequence by changing the variable, $j = i - 1$.

It is given that $\sum_{i=1}^{n+1} \frac{(i-1)^2}{i \cdot n}$.

It is also given that, $j = i - 1$

$i = j + 1$

The limits of the sequence are as follows:

If $i = 1$, then $j = 1 - 1$

$j = 0$

If $i = n + 1$, then $j = n + 1 - 1$

$j = n$

Step 2 of 2

The sequence is as follows:

$$\frac{(i-1)^2}{i \cdot n} = \frac{(j)^2}{(j+1) \cdot n} \qquad (\text{Since } i = j + 1)$$

Hence, the transformed sequence is as follows:

$$\sum_{i=1}^{n+1} \frac{(i-1)^2}{i \cdot n} = \boxed{\sum_{j=0}^{n} \frac{j^2}{(j+1) \cdot n}}.$$

Chapter 5.1, Problem 56E

Problem

Transform making the change of variable $j = i - 1$.

Exercise

$$\sum_{i=3}^{n} \frac{i}{i+n-1}$$

Step-by-step solution

Step 1 of 1

It is given that

$$\sum_{i=3}^{n} \frac{i}{i+n-1}$$

It is also given that $j = i - 1 \Rightarrow i = j + 1$

Now, if $i = 3$, then $j = 3 - 1 = 2 \Rightarrow j = 2$

If $i = n$, then $j = n - 1$

And

$$\frac{i}{i+n-1} = \frac{j+1}{j+1+n-1} \qquad (\because i = j+1)$$

$$= \frac{j+1}{j+n+1-1}$$

$$= \frac{j+1}{j+n}$$

$$\therefore \frac{i}{i+n-1} = \frac{j+1}{j+n}$$

$$\therefore \sum_{i=3}^{n} \frac{i}{i+n-1} = \sum_{j=2}^{n-1} \frac{j+1}{j+n}$$

Chapter 5.1, Problem 57E

Problem

Transform making the change of variable $j = i - 1$.

Exercise

$$\sum_{i=1}^{n-1} \frac{i}{(n-i)^2}$$

Step-by-step solution

Step 1 of 2

Consider the limit $\sum_{i=1}^{n-1} \frac{i}{(n-i)^2}$.

When $i = 1$, then $j = 0$

When $i = n-1$, then $j = n-2$

Since $j = i-1$, then $i = j+1$

Step 2 of 2

Thus, $\frac{i}{(n-i)^2}$ can be expressed as follows:

$$\frac{i}{(n-i)^2} = \frac{j+1}{(n-(j+1))^2} \qquad (i = j+1)$$

$$= \frac{j+1}{(n-j-1)^2}$$

So, $\sum_{i=1}^{n-1} \frac{i}{(n-i)^2} = \boxed{\sum_{j=0}^{n-2} \frac{j+1}{(n-j-1)^2}}$

Chapter 5.1, Problem 58E

Problem

Transform making the change of variable $j = i - 1$.

Exercise

$$\prod_{i=n}^{2n} \frac{n-i+1}{n+i}$$

Step-by-step solution

Step 1 of 1

It is given that

$$\prod_{i=n}^{2n} \frac{n-i+1}{n+i}$$

It is also given that $j = i - 1 \Rightarrow i = j + 1$

Now,

If $i = n$, then $j = n - 1$

If $i = 2n$, then $j = 2n - 1$

$$\frac{n-i+1}{n+i} = \frac{n-(j+1)+1}{n+(j+1)}$$

$$= \frac{n-j-1+1}{n+j+1}$$

$$= \frac{n-j}{n+j+1}$$

$$\Rightarrow \frac{n-i+1}{n+i} = \frac{n-j}{n+j+1}$$

$$\therefore \sum_{i=n}^{2n} \frac{n-i+1}{n+i} = \sum_{j=n-1}^{2n-1} \frac{n-j}{n+j+1}$$

Chapter 5.1, Problem 59E

Problem

Write a single summation or product.

Exercise

$$3\cdot\sum_{k=1}^{n}(2k-3)+\sum_{k=1}^{n}(4-5k)$$

Step-by-step solution

Step 1 of 1

It is given that

$$3\sum_{k=1}^{n}(2k-3)+\sum_{k=1}^{n}(4-5k)$$

$$=\sum_{k=1}^{n}3(2k-3)+\sum_{k=1}^{n}(4-5k)$$

$$=\sum_{k=1}^{n}(6k-9)+\sum_{k=1}^{n}(4-5k)$$

$$=\sum_{k=1}^{n}(6k-9+4-5k) \qquad \left(\because \sum_{k=m}^{n}a_k+\sum_{k=m}^{n}b_k=\sum_{k=m}^{n}(a_k+b_k)\right)$$

$$=\sum_{k=1}^{n}(6k-5k-9+4)$$

$$=\sum_{k=1}^{n}(k-5)$$

$$\therefore 3\sum_{k=1}^{n}(2k-3)+\sum_{k=1}^{n}(4-5k)=\sum_{k=1}^{n}(k-5)$$

Chapter 5.1, Problem 60E

Problem

Write a single summation or product.

Exercise

$$2\cdot\sum_{k=1}^{n}(3k^2+4)+5\cdot\sum_{k=1}^{n}(2k^2-1)$$

Step-by-step solution

Step 1 of 1

It is given that

$$2\sum_{k=1}^{n}\left(3k^2+4\right)+5\sum_{k=1}^{n}\left(2k^2-1\right)$$

$$=\sum_{k=1}^{n}2\left(3k^2+4\right)+\sum_{k=1}^{n}5\left(2k^2-1\right)$$

$$=\sum_{k=1}^{n}\left(6k^2+8\right)+\sum_{k=1}^{n}\left(10k^2-5\right)$$

$$=\sum_{k=1}^{n}\left(6k^2+8+10k^2-5\right)\quad\left(\because\sum_{k=m}^{n}a_k+\sum_{k=m}^{n}b_k=\sum_{k=m}^{n}\left(a_k+b_k\right)\right)$$

$$=\sum_{k=1}^{n}\left(6k^2+10k^2+8-5\right)$$

$$=\sum_{k=1}^{n}\left(16k^2+3\right)$$

$$\therefore 2\sum_{k=1}^{n}\left(3k^2+4\right)+5\sum_{k=1}^{n}\left(2k^2-1\right)=\sum_{k=1}^{n}\left(16k^2+3\right)$$

Chapter 5.1, Problem 61E

Problem

Write a single summation or product.

Exercise

$$\left(\prod_{k=1}^{n}\frac{k}{k+1}\right)\cdot\left(\prod_{k=1}^{n}\frac{k+1}{k+2}\right)$$

Step-by-step solution

Step 1 of 1

It is given that

$$\prod_{k=1}^{n}\left(\frac{k}{k+1}\right)\cdot\prod_{k=1}^{n}\left(\frac{k+1}{k+2}\right)$$

$$=\prod_{k=1}^{n}\left(\frac{k}{k+1}\cdot\frac{(k+1)}{(k+2)}\right) \qquad \left[\because\left(\prod_{k=m}^{n}(a_k)\right)\cdot\left(\prod_{k=m}^{n}(b_k)\right)=\prod_{k=m}^{n}(a_k\cdot b_k)\right]$$

$$=\prod_{k=1}^{n}\frac{k}{(k+2)}$$

$$\therefore\prod_{k=1}^{n}\left(\frac{k}{k+1}\right)\cdot\prod_{k=1}^{n}\left(\frac{k+1}{k+2}\right)=\prod_{k=1}^{n}\frac{k}{(k+2)}$$

Chapter 5.1, Problem 62E

Problem

Assume the values of the variables are restricted so that the expressions are defined.

Exercise

$\frac{4!}{3!}$

Step-by-step solution

Step 1 of 2

Consider the fraction $\frac{4!}{3!}$.

The objective is to compute the value of the given fraction.

The definition of a factorial, denoted by $n!$ for each positive integer n, states that a factorial of n is the product of all the integers from $1 \text{ to } n$.

$$n! = n \cdot (n-1) \cdot (n-2) \cdots 3 \cdot 2 \cdot 1$$

Step 2 of 2

It is given that,

$$\frac{4!}{3!} = \frac{4 \times 3 \times 2 \times 1}{3 \times 2 \times 1}$$

$$\frac{4!}{3!} = \frac{4 \times \cancel{3 \times 2 \times 1}}{\cancel{3 \times 2 \times 1}}$$

$$= \frac{4}{1}$$

$$= 4$$

Hence, the value of the given fraction is $\frac{4!}{3!} = \boxed{4}$.

Chapter 5.1, Problem 63E

Problem

Assume the values of the variables are restricted so that the expressions are defined.

Exercise

$$\frac{6!}{8!}$$

Step-by-step solution

Step 1 of 1

It is given that

$$\frac{6!}{8!} = \frac{6!}{8 \times 7 \times 6!}$$

$$= \frac{1}{8 \times 7} \text{ where } 6! = 6 \times 5 \times 4 \times 3 \times 2 \times 1$$

$$= \frac{1}{56}$$

$$\therefore \frac{6!}{8!} = \frac{1}{56}$$

Chapter 5.1, Problem 64E

Problem

Assume the values of the variables are restricted so that the expressions are defined.

Exercise

$$\frac{4!}{0!}$$

Step-by-step solution

Step 1 of 1

It is given that

$$\frac{4!}{0!} = \frac{4\times3\times2\times1}{1} \quad (\therefore 0! = 1)$$
$$= 12\times2\times1$$
$$= 24\times1$$
$$= 24$$
$$\therefore \frac{4!}{0!} = 24$$

Chapter 5.1, Problem 65E

Problem

Assume the values of the variables are restricted so that the expressions are defined.

Exercise

$$\frac{n!}{(n-1)!}$$

Step-by-step solution

Step 1 of 2

Consider the fraction $\frac{n!}{(n-1)!}$.

The objective is to compute the value of the given fraction.

The definition of factorial, denoted by $n!$ for each positive integer n, states that factorial of n is the product of all the integers from 1 to n.

$$n! = n\cdot(n-1)\cdot(n-2)\cdots 3\cdot 2\cdot 1$$

Step 2 of 2

It is given that,

$$\frac{n!}{(n-1)!} = \frac{n\cdot(n-1)\cdot(n-2)\cdots 3\cdot 2\cdot 1}{(n-1)\cdot(n-2)\cdots 3\cdot 2\cdot 1}$$

$$= \frac{n\times(n-1)!}{(n-1)!} \qquad \text{Where } (n-1)! = (n-1)\cdot(n-2)\cdots 3\cdot 2\cdot 1$$

$$= \frac{n\times\cancel{(n-1)!}}{\cancel{(n-1)!}}$$

$$= n.$$

Hence, the value of the given fraction is $\frac{n!}{(n-1)!} = \boxed{n}$.

Chapter 5.1, Problem 66E

Problem

Assume the values of the variables are restricted so that the expressions are defined.

Exercise

$\frac{(n-1)!}{(n+1)!}$

Step-by-step solution

Step 1 of 2

Consider the fraction $\frac{(n-1)!}{(n+1)!}$.

The objective is to compute the value of the given fraction.

The definition of factorial, denoted by $n!$ for each positive integer n, states that factorial of n is the product of all the integers from $1 \text{ to } n$.

$$n! = n \cdot (n-1) \cdot (n-2) \cdots 3 \cdot 2 \cdot 1$$

Step 2 of 2

It is given that,

$$\frac{(n-1)!}{(n+1)!} = \frac{(n-1)!}{(n+1) \times n!}$$

$$= \frac{(n-1)!}{(n+1) \times n \times (n-1)!} \text{ Where } (n-1)! = (n-1)(n-2) \cdots 3 \cdot 2 \cdot 1$$

$$= \frac{\cancel{(n-1)!}}{(n+1) \times n \times \cancel{(n-1)!}}$$

$$= \frac{1}{n(n+1)}$$

$$= \frac{1}{n^2+n}.$$

Hence, the value of the given fraction is $\frac{(n-1)!}{(n+1)!} = \boxed{\frac{1}{n^2+n}}$.

Chapter 5.1, Problem 67E

Problem

Assume the values of the variables are restricted so that the expressions are defined.

Exercise

$$\frac{n!}{(n-2)!}$$

Step-by-step solution

Step 1 of 1

It is given that

$$\frac{n!}{(n-2)!}=\frac{n\times(n-1)!}{(n-2)!}$$

$$=\frac{n\times(n-1)\times(n-2)!}{(n-2)!}$$ [where $(n-2)!=(n-2)(n-3).....3\cdot2\cdot1$]

$$=n(n-1)$$

$$=n^2-n$$

$$\therefore \frac{n!}{(n-2)!}=n^2-n$$

Chapter 5.1, Problem 68E

Problem

Assume the values of the variables are restricted so that the expressions are defined.

Exercise

$$\frac{((n+1)!)^2}{(n!)^2}$$

Step-by-step solution

Step 1 of 1

Here the expression is

$$\frac{((n+1)!)^2}{(n!)^2}$$

To compute the term follow step as below:

$$\begin{aligned}\frac{((n+1)!)^2}{(n!)^2} &= \frac{\left[(n+1)n(n-1)(n-2)...3.2.1\right]^2}{\left[n(n-1)(n-2)...3.2.1\right]^2} \\ &= \frac{(n+1)^2\cancel{\left[n(n-1)(n-2)...3.2.1\right]^2}}{\cancel{\left[n(n-1)(n-2)...3.2.1\right]^2}} \\ &= \boxed{(n+1)^2}\end{aligned}$$

Chapter 5.1, Problem 69E

Problem

Assume the values of the variables are restricted so that the expressions are defined.

Exercise

$$\frac{n!}{(n-k)!}$$

Step-by-step solution

Step 1 of 1

It is given that

$$\frac{n!}{(n-k)!}=\frac{n\cdot(n-1)(n-2)\ldots\ldots\ldots\ldots(n-k+1)(n-k)(n-k-1)\ldots\ldots\ldots\ldots3\cdot2\cdot1}{(n-k)\cdot(n-k-1)\ldots\ldots\ldots\ldots\ldots3\cdot2\cdot1}$$

$$=n(n-1)(n-2)\ldots\ldots\ldots\ldots(n-k+1)$$

$$\therefore\frac{n!}{(n-k)!}=n(n-1)(n-2)\ldots\ldots\ldots\ldots(n-k+1)$$

Chapter 5.1, Problem 70E

Problem

Assume the values of the variables are restricted so that the expressions are defined.

Exercise

$$\frac{n!}{(n-k+1)!}$$

Step-by-step solution

Step 1 of 2

Consider the fraction $\frac{n!}{(n-k+1)!}$.

The objective is to compute the value of the given fraction.

The definition of factorial, denoted by $n!$ for each positive integer n, states that the factorial of n is the product of all the integers from 1 to n.

$$n! = n\cdot(n-1)\cdot(n-2)\cdots 3\cdot 2\cdot 1$$

Step 2 of 2

It is given that,

$$\frac{n!}{(n-k+1)!} = \frac{n(n-1)\cdots(n-k+2)(n-k+1)(n-k)\cdots 3\cdot 2\cdot 1}{(n-k+1)(n-k)(n-k-1)\cdots 3\cdot 2\cdot 1}$$

$$= \frac{n(n-1)\cdots(n-k+2)\cancel{(n-k+1)(n-k)\cdots 3\cdot 2\cdot 1}}{\cancel{(n-k+1)(n-k)(n-k-1)\cdots 3\cdot 2\cdot 1}}$$

$$= n(n-1)(n-2)\cdots(n-k+2).$$

Hence, the value of the given fraction is $\frac{n!}{(n-k+1)!} = \boxed{n(n-1)(n-2)\cdots(n-k+2)}$.

Chapter 5.1, Problem 71E

Problem

Assume the values of the variables are restricted so that the expressions are defined.

Exercise

$\binom{5}{3}$

Step-by-step solution

Step 1 of 2

For all integer n and r with $0 \le r \le n$,

$$\binom{n}{r} = \frac{n!}{r!(n-r)!}.$$

Step 2 of 2

Taking $n = 5$ and $r = 3$, we have

$$\begin{aligned}\binom{5}{3} &= \frac{5!}{3!(5-3)!} \\ &= \frac{5\times4\times3\times2\times1}{(3\times2\times1)\times(2\times1)} \\ &= \frac{5\times4^2\times\cancel{(3\times2\times1)}}{\cancel{(3\times2\times1)}\times(\cancel{2}\times1)} \\ &= \frac{10}{1} \\ &= 10\end{aligned}$$

$$\therefore \binom{5}{3} = 10$$

Chapter 5.1, Problem 72E

Problem

Assume the values of the variables are restricted so that the expressions are defined.

Exercise

$\binom{7}{4}$

Step-by-step solution

Step 1 of 1

Here the expression is

$$\binom{7}{4}$$

We have from definition that, the combination expression is given as

$$\binom{n}{r} = \frac{n!}{r!(n-r)!}$$

Therefore, the expression can be computed as below:

$$\begin{aligned}\binom{7}{4} &= \frac{7!}{4!(7-4)!} \\ &= \frac{7!}{4!3!} \\ &= \frac{7\cdot 6\cdot 5\cdot \cancel{4!}}{\cancel{4!}(3\cdot 2\cdot 1)} \\ &= \frac{(7\cdot 5)\cdot \cancel{6}}{\cancel{6}} \\ &= \boxed{35}\end{aligned}$$

Chapter 5.1, Problem 73E

Problem

Assume the values of the variables are restricted so that the expressions are defined.

Exercise

$\binom{3}{0}$

Step-by-step solution

Step 1 of 2

Consider the combination $\binom{3}{0}$.

The objective is to find the value of the given combination.

The definition of combination states that, for all integers n and r with $0 \le r \le n$,

$$\binom{n}{r} = \frac{n!}{r!(n-r)!}$$

The definition of factorial, denoted by $n!$ for each positive integer n, states that the factorial of n is the product of all the integers from 1 to n.

$$n! = n \cdot (n-1) \cdot (n-2) \cdots 3 \cdot 2 \cdot 1$$

Step 2 of 2

Here, $n = 3 > 0$ and $r = 0$.

$\binom{3}{0} = \frac{3!}{0!(3-0)!}$ Using the formula $\binom{n}{r} = \frac{n!}{r!(n-r)!}$

$$\binom{3}{0} = \frac{3!}{0!3!}$$

$$= \frac{\cancel{3 \times 2 \times 1}}{(1) \times \cancel{3 \times 2 \times 1}}$$

$$= 1.$$

Hence, the value of the given combination is $\binom{3}{0} = \boxed{1}$.

Chapter 5.1, Problem 74E

Problem

Assume the values of the variables are restricted so that the expressions are defined.

Exercise

$\binom{5}{5}$

Step-by-step solution

Step 1 of 2

Consider the combination $\binom{5}{5}$.

The objective is to find the value of the given combination.

The definition of the combination for all integers n and r with $0 \le r \le n$ is,

$$\binom{n}{r} = \frac{n!}{r!(n-r)!}.$$

The factorial denoted by $n!$ for each positive integer n is the product of all the integers from 1 to n.

$$n! = n \cdot (n-1) \cdot (n-2) \cdots 3 \cdot 2 \cdot 1$$

Step 2 of 2

Here $n = 5 > 0$ and $r = 5 > 0$.

$\binom{5}{5} = \frac{5!}{5!(5-5)!}$ Use the formula $\binom{n}{r} = \frac{n!}{r!(n-r)!}$.

$$\binom{5}{5} = \frac{5!}{5!(0)!}$$

$$= \frac{\cancel{5 \times 4 \times 3 \times 2 \times 1}}{\cancel{5 \times 4 \times 3 \times 2 \times 1} \times (1)}$$

$$= 1.$$

Hence, the value of the given combination is $\binom{5}{5} = \boxed{1}$.

Chapter 5.1, Problem 75E

Problem

Assume the values of the variables are restricted so that the expressions are defined.

Exercise

$$\binom{n}{n-1}$$

Step-by-step solution

Step 1 of 2

Consider the combination $\binom{n}{n-1}$.

Objective is to find the value of the given combination.

The definition of the combination, for all integers n and r with $0 \le r \le n$ is,

$$\binom{n}{r} = \frac{n!}{r!(n-r)!}.$$

The definition of the factorial denoted by $n!$ for each positive integer n is the product of all the integers from 1 to n.

$$n! = n \cdot (n-1) \cdot (n-2) \cdots 3 \cdot 2 \cdot 1$$

Step 2 of 2

Here, $n = n$ and $r = n-1$.

$$\binom{n}{n-1} = \frac{n!}{(n-1)!(n-(n-1))!}$$ Use the formula $\binom{n}{r} = \frac{n!}{r!(n-r)!}$.

$$\binom{n}{n-1} = \frac{n!}{(n-1)!(1)!}$$

$$= \frac{n \times \cancel{(n-1) \times (n-2) \times \cdots 3 \times 2 \times 1}}{\cancel{(n-1) \times (n-2) \times \cdots 3 \times 2 \times 1} \times (1)}$$

$$= n.$$

Hence, the value of the given combination is $\binom{n}{n-1} = \boxed{n}$.

Chapter 5.1, Problem 76E

Problem

Assume the values of the variables are restricted so that the expressions are defined.

Exercise

$\binom{n+1}{n-1}$

Step-by-step solution

Step 1 of 2

The objective is to compute $\binom{n+1}{n-1}$.

For all integers n and r with $0 \le r \le n$,

$$\binom{n}{r} = \frac{n!}{r!(n-r)!}$$

Step 2 of 2

Apply this formula to compute $\binom{n+1}{n-1}$.

$$\begin{aligned}
\binom{n+1}{n-1} &= \frac{(n+1)!}{(n-1)!((n+1)-(n-1))!} \\
&= \frac{(n+1)!}{(n-1)!(\cancel{n}+1-\cancel{n}+1)!} \\
&= \frac{(n+1)!}{(n-1)!2!} \\
&= \frac{(n+1)n(n-1)!}{(n-1)!2!} \\
&= \frac{(n+1)n}{2!} \qquad \text{cancelling the common factor } (n-1)! \\
&= \frac{(n+1)n}{2}
\end{aligned}$$

Hence, the value of $\boxed{\binom{n+1}{n-1} = \frac{(n+1)n}{2}}$.

Chapter 5.1, Problem 77E

Problem

Assume the values of the variables are restricted so that the expressions are defined.

Exercise

a. Prove that $n! + 2$ is divisible by 2, for all integers $n \geq 2$.

b. Prove that $n! + k$ is divisible by k, for all integers $n \geq 2$ and $k = 2, 3, \ldots, n$.

c. Given any integer $m \geq 2$, is it possible to find a sequence of $m - 1$ consecutive positive integers none of which is prime? Explain your answer.

Step-by-step solution

Step 1 of 3

(a)

The objective is to prove that $n!+2$ is divisible by 2, for all integers $n \geq 2$.

Let n be an integer greater than 2, $n \geq 2$.

By the definition of factorial, $n! = n \cdot (n-1) \cdot \ldots \cdot 2 \cdot 1$.

As $n \geq 2$, the expansion $n \cdot (n-1) \cdot \ldots \cdot 2 \cdot 1$ contains the factor 2.

$$\begin{aligned} n!+2 &= \left[n \cdot (n-1) \cdot \ldots \cdot 2 \cdot 1\right] + 2 \\ &= 2\left[n \cdot (n-1) \cdot \ldots \cdot 4 \cdot 3 \cdot 1 + 1\right] \end{aligned}$$

Take $s = n \cdot (n-1) \cdot \ldots \cdot 4 \cdot 3 \cdot 1 + 1$, then $n!+2 = 2s$, for some integer s.

Thus, $n!+2$ is divisible by 2.

Step 2 of 3

(b)

The objective is to prove that $n!+k$ is divisible by k, for all integers $n \geq 2$ and $k = 2, 3, \ldots, n$.

Let n be an integer greater than 2, $n \geq 2$.

Let k be an integer between 2 and n.

By the definition of factorial, $n! = n \cdot (n-1) \cdot \ldots \cdot 2 \cdot 1$.

As $2 \leq k \leq n$, the expansion $n \cdot (n-1) \cdot \ldots \cdot 2 \cdot 1$ contains the factor k.

$$\begin{aligned} n!+k &= \left[n \cdot (n-1) \cdot \ldots \cdot 2 \cdot 1\right] + k \\ &= k\left[n \cdot (n-1) \cdot \ldots \cdot 2 \cdot 1 + 1\right] \end{aligned}$$

Take $s = n \cdot (n-1) \cdot \ldots \cdot 2 \cdot 1 + 1$, then $n!+2 = 2s$, for some integer s.

Thus, $n!+k$ is divisible by k.

Step 3 of 3

(c)

The objective is to explain whether it is possible to find a sequence of $m-1$ consecutive positive integers that are not prime for $m \geq 2$.

From part **(b)**, $m!+k$ is divisible by k when $k = 2, 3, \ldots, n$.

Note that $m!+k$ are k consecutive positive integers of which none are prime.

Yes, there exists a sequence of $m-1$ consecutive positive integers that are not primes.

Chapter 5.1, Problem 78E

Problem

Prove that for all nonnegative integers n and r with $r+1 \le n$, $\binom{n}{r+1} = \frac{n-r}{r+1}\binom{n}{r}$.

Step-by-step solution

Step 1 of 2

For all integer n and r with $0 \le r+1 \le n$,

$$\binom{n}{r+1} = \frac{n!}{(r+1)!(n-(r+1))!} \quad \ldots(1)$$

Step 2 of 2

Consider the right hand side of (1),

$$\begin{aligned}
&\frac{n!}{(r+1)!(n-(r+1))!} \\
&= \frac{(n-r)n!}{(r+1)(r)!(n-r)((n-r)-1)!} \qquad \begin{bmatrix}\text{multiply } (n-r) \text{ on both} \\ \text{numerator and denomenator}\end{bmatrix} \\
&= \frac{n-r}{r+1}\frac{n!}{(r)!(n-r)!} \\
&= \frac{n-r}{r+1}\binom{n}{r}
\end{aligned}$$

Therefore $\binom{n}{r+1} = \frac{n-r}{r+1}\binom{n}{r}$.

Chapter 5.1, Problem 79E

Problem

Prove that if *p* is a prime number and *r* is an integer with 0<*r then* $\binom{p}{r}$ *is divisible by p.*

Step-by-step solution

Step 1 of 3

Consider a prime number p.

An integer r that is lies between 0 and the prime number p.

i.e., $0 < r < p$.

the objective is to prove that $\binom{p}{r} = p_{C_r}$ is divisible by p.

Step 2 of 3

Consider the formula for combination $\binom{p}{r}$ is,

$$\begin{aligned}\binom{p}{r} &= \frac{p!}{r!(p-r)!} \\ &= \frac{1\cdot 2\cdots(p-1)\cdot p}{[1\cdot 2\cdots r]\cdot[1\cdot 2\cdots(p-r)]}\end{aligned}$$

The numerator and the denominator have a prime factorization.

Now, observe that in the above one of the prime must be present in the numerator and all the primes in the denominator are less than p because all the numbers in the product are less than p.

Step 3 of 3

From the known factorial notation,

$n! = n\cdot(n-1)!$

Write the factorial $p!$ as $p\cdot(p-1)!$ in the above combination as,

$$\begin{aligned}\binom{p}{r} &= \frac{p!}{r!(p-r)!} \\ &= \frac{p\cdot(p-1)!}{r!(p-r)!} \\ &= p\cdot\frac{(p-1)!}{r!(p-r)!} \\ &= p\cdot\left[\frac{(p-1)!}{r!(p-r)!}\right]\end{aligned}$$

It is divisible by p.

Observe that there is no p in the denominator.

Therefore, p cannot be cancel out.

This shows that the obtained prime factorization of the integer $\binom{p}{r}$ will contain a p.

Hence, $\binom{p}{r}$ **divisible by** p **.**

Chapter 5.1, Problem 80E

Problem

Suppose $a[1], a[2], a[3], \ldots, a[m]$ is a one-dimensional array and consider the following algorithm segment:

sum := 0

for *k* := 1 **to** *m*

sum := *sum* + *a*[*k*]

next *k*

Fill in the blanks below so that each algorithm segment performs the same job as the one given previously.

a. *sum* := 0

for *i* := 0 **to** _____

sum := _____

next *i*

b. *sum* := 0

for *j* := 2 **to** _____

sum := _____

next *j*

Step-by-step solution

Step 1 of 2

It is given that the sum = 0

For *k* = 1 to *m*

Sum = sum + *a*(*k*)

Next *k*

a) Substituting $i = k - 1$ into the equation, we get $k = i + 1$

If $k = 1$, then $i = 1 - 1 = 0 \Rightarrow i = 0$

If $k = m$, then $i = m - 1$

Sum = 0

$\Rightarrow$ for $i = 0$ to $m - 1$

Sum = sum $+a(i+1)$

Next i

$\therefore m - 1$ and the sum $+\left[a(i+1)\right]$ are the answers in the blanks

Step 2 of 2

b) Substituting $i = k + 1 \Rightarrow k = i - 1$

If $k = 1$, then $i = 1 + 1 = 2 \Rightarrow i = 2$

If $k = m$, then $i = m + 1$

$\Rightarrow$ Sum = 0

For $i = 2$ to $m + 2$

Sum = sum $+a(i-1)$

Next i

$\therefore m + 2$ and the sum $+\left[a(i-1)\right]$ are the answers in the blanks

Chapter 5.2, Problem 1E

Problem

Use the technique illustrated at the beginning of this section to show that the statements in (a) and (b) are true.

a. If $\left(1-\frac{1}{2}\right)\left(1-\frac{1}{3}\right)\left(1-\frac{1}{4}\right)\left(1-\frac{1}{5}\right)=\frac{1}{5}$ then $\left(1-\frac{1}{2}\right)\left(1-\frac{1}{3}\right)\left(1-\frac{1}{4}\right)\left(1-\frac{1}{5}\right)\left(1-\frac{1}{6}\right)=\frac{1}{6}$.

b. If $\left(1-\frac{1}{2}\right)\left(1-\frac{1}{3}\right)\left(1-\frac{1}{4}\right)\left(1-\frac{1}{5}\right)\left(1-\frac{1}{6}\right)=\frac{1}{6}$ then $\left(1-\frac{1}{2}\right)\left(1-\frac{1}{3}\right)\left(1-\frac{1}{4}\right)\left(1-\frac{1}{5}\right)\left(1-\frac{1}{6}\right)\left(1-\frac{1}{7}\right)=\frac{1}{7}$.

Step-by-step solution

Step 1 of 2

a.

Consider the following summation.

If $\left(1-\frac{1}{2}\right)\left(1-\frac{1}{3}\right)\left(1-\frac{1}{4}\right)\left(1-\frac{1}{5}\right)=\frac{1}{5}$ then $\left(1-\frac{1}{2}\right)\left(1-\frac{1}{3}\right)\left(1-\frac{1}{4}\right)\left(1-\frac{1}{5}\right)\left(1-\frac{1}{6}\right)=\frac{1}{6}$.

The objective is to show that the above statement is true.

Consider the LHS $\left(1-\frac{1}{2}\right)\left(1-\frac{1}{3}\right)\left(1-\frac{1}{4}\right)\left(1-\frac{1}{5}\right)\left(1-\frac{1}{6}\right)$

$$\begin{aligned}\left(1-\frac{1}{2}\right)\left(1-\frac{1}{3}\right)\left(1-\frac{1}{4}\right)\left(1-\frac{1}{5}\right)\left(1-\frac{1}{6}\right)&=\left\{\left(1-\frac{1}{2}\right)\left(1-\frac{1}{3}\right)\left(1-\frac{1}{4}\right)\left(1-\frac{1}{5}\right)\left(1-\frac{1}{6}\right)\right\}\left(1-\frac{1}{6}\right)\\&=\frac{1}{5}\times\left(\frac{6-1}{6}\right)\quad\left[\because\left(1-\frac{1}{2}\right)\left(1-\frac{1}{3}\right)\left(1-\frac{1}{4}\right)\left(1-\frac{1}{5}\right)=\frac{1}{5}\right]\\&=\frac{1}{5}\times\left(\frac{5}{6}\right)\\&=\frac{1}{6}\end{aligned}$$

Thus, the statement is <u>true</u>.

Step 2 of 2

b.

Consider the following summation.

If $\left(1-\frac{1}{2}\right)\left(1-\frac{1}{3}\right)\left(1-\frac{1}{4}\right)\left(1-\frac{1}{5}\right)\left(1-\frac{1}{6}\right)=\frac{1}{6}$

then $\left(1-\frac{1}{2}\right)\left(1-\frac{1}{3}\right)\left(1-\frac{1}{4}\right)\left(1-\frac{1}{5}\right)\left(1-\frac{1}{6}\right)\left(1-\frac{1}{7}\right)=\frac{1}{7}$

The objective is to show the given statement is true.

Consider the LHS $\left(1-\frac{1}{2}\right)\left(1-\frac{1}{3}\right)\left(1-\frac{1}{4}\right)\left(1-\frac{1}{5}\right)\left(1-\frac{1}{6}\right)\left(1-\frac{1}{7}\right)$.

$$\begin{aligned}\left(1-\frac{1}{2}\right)\left(1-\frac{1}{3}\right)\left(1-\frac{1}{4}\right)\left(1-\frac{1}{5}\right)\left(1-\frac{1}{6}\right)\left(1-\frac{1}{7}\right)&=\left\{\left(1-\frac{1}{2}\right)\left(1-\frac{1}{3}\right)\left(1-\frac{1}{4}\right)\left(1-\frac{1}{5}\right)\left(1-\frac{1}{6}\right)\right\}\left(1-\frac{1}{7}\right)\\&=\frac{1}{6}\left(\frac{7-1}{7}\right)\quad\left[\because\left(1-\frac{1}{2}\right)\left(1-\frac{1}{3}\right)\left(1-\frac{1}{4}\right)\left(1-\frac{1}{5}\right)\left(1-\frac{1}{6}\right)=\frac{1}{6}\right]\\&=\frac{1}{6}\times\frac{6}{7}\\&=\frac{1}{7}\end{aligned}$$

The given statement is <u>true</u>.

Chapter 5.2, Problem 2E

Problem

For each positive integer *n*, let *P(n)* be the formula

$$1^2+2^2+\cdots+n^2=\frac{n(n+1)(2n+1)}{6}.$$

a. Write *P*(1). Is *P*(1) true?

b. Write *P (k)*.

c. Write *P(K* + 1).

d. In a proof by mathematical induction that the formula holds for all integers $n \geq 1$, what must be shown in the inductive step?

Step-by-step solution

Step 1 of 4

The formula for $P(n)$ is as follows:

$$1^2+2^2+3^2+\cdots+n^2=\frac{n(n+1)(2n+1)}{6}$$

Here, n is any positive integer.

a.

The objective is to write the formula for $P(1)$ and check the validity of $P(1)$.

The formula for $P(1)$ is as follows:

$$1^2=\frac{1(1+1)(2(1)+1)}{6}$$

Simplify the left-hand side and right-hand side of the above equation as,

LHS: $1^2=1$.

RHS: $\frac{1(1+1)(2(1)+1)}{6}=\frac{1(2)(3)}{6}=1$

The formula is **true** for $P(1)$ since the left-hand side and the right-hand side values are equal to 1.

Step 2 of 4

b.

The objective is to write the formula for $P(k)$.

Substitute $n=k$ in the formula $1^2+2^2+3^2+\cdots+n^2=\frac{n(n+1)(2n+1)}{6}$.

$$P(k):\boxed{1^2+2^2+\cdots+k^2=\frac{k(k+1)(2k+1)}{6}}.$$

Step 3 of 4

c.

The objective is to write the formula for $P(k+1)$.

Substitute $n=k+1$ in the formula $1^2+2^2+3^2+\cdots+n^2=\frac{n(n+1)(2n+1)}{6}$.

$$P(k+1):1^2+2^2+\cdots+(k+1)^2=\frac{(k+1)(k+1+1)(2(k+1)+1)}{6}$$

$$P(k+1):1^2+2^2+\cdots+(k+1)^2=\frac{(k+1)(k+2)(2k+3)}{6}$$

Step 4 of 4

d.

In a proof by mathematical induction that the formula holds for all integers $n \geq 1$, need to prove in the induction step that $P(k+1)$ is true by assuming $P(k)$ is true.

That is, assume the formula $P(k)$: $1^2+2^2+\cdots+k^2=\frac{k(k+1)(2k+1)}{6}$ is true, need to prove

$P(k+1):1^2+2^2+\cdots+(k+1)^2=\frac{(k+1)(k+2)(2k+3)}{6}$ is true.

Proof:

Consider $1^2+2^2+\cdots+k^2=\frac{k(k+1)(2k+1)}{6}$.

Add $(k+1)^2$ on both sides of the above equation.

$$\begin{aligned}1^2+2^2+\cdots+k^2+(k+1)^2&=\frac{k(k+1)(2k+1)}{6}+(k+1)^2\\&=(k+1)\left[k+1+\frac{k(2k+1)}{6}\right]\end{aligned}$$

$$\begin{aligned}&=(k+1)\left[\frac{6k+6+2k^2+k}{6}\right]\\&=\frac{(k+1)(2k^2+7k+6)}{6}\\&=\frac{(k+1)(k+2)(2k+3)}{6}\\&=\frac{(k+1)(k+1+1)(2(k+1)+1)}{6}.\end{aligned}$$

Hence, it is true for all integers $n \geq 1$,

$$1^2+2^2+\cdots+(k+1)^2=\frac{(k+1)(k+1+1)(2(k+1)+1)}{6}.$$

Hence, the given formula $P(n)$ is true for all $n \geq 1$.

Comments (1)

My textbook 5th edition has a different problem. My #2 states: For each positive integer n, let P(n) be the formula 1 + 3 + 5 + . . . + (2n - 1) = n^2 What is shown in this example is exercise #3 in my book

Chapter 5.2, Problem 3E

Problem

For each integer n with $n \geq 2$, let $P(n)$ be the formula

$$\sum_{i=1}^{n-1} i(i+1) = \frac{n(n-1)(n+1)}{3}.$$

a. Write $P(2)$. Is $P(2)$ true?

b. Write $P(k)$.

c. Write $P(k+1)$.

d. In a proof by mathematical induction that the formula holds for all integers $n \geq 2$, what must be shown in the inductive step?

Step-by-step solution

Step 1 of 6

(a)

Consider the formula for $P(n)$ where n is positive integer with $n \geq 2$.

$$\sum_{i=1}^{n-1} i(i+1) = \frac{n(n-1)(n+1)}{3}.$$

Objective is to find the value of P at $n = 2$.

$$P(n) = \frac{n(n-1)(n+1)}{3}$$

$$P(2) = \frac{2\times(2-1)\times(2+1)}{3} \text{ Substitute } n = 2.$$

$$= \frac{2\times1\times3}{3}$$

$$= 2$$

$$P(2) = 2$$

Step 2 of 6

Clearly, from left hand side;

$$P(2) = \sum_{i=1}^{2-1} i(i+1)$$

$$= \sum_{i=1}^{1} i(i+1)$$

$$= 1\times(1+1)$$

$$= 1\times2$$

$$= 2$$

Hence, it is true that $\boxed{P(2) = 2}$.

Step 3 of 6

(b)

Objective is to write the formula for $P(k)$.

Substitute $n = k$ in the formula $\sum_{i=1}^{n-1} i(i+1) = \frac{n(n-1)(n+1)}{3}$.

$P(k)$ is $\sum_{i=1}^{k-1} i(i+1) = \frac{k(k-1)(k+1)}{3}$.

Step 4 of 6

(c)

Objective is to write the formula for $P(k+1)$.

Substitute $n = k+1$ in the formula $\sum_{i=1}^{n-1} i(i+1) = \frac{n(n-1)(n+1)}{3}$.

$P(k+1)$ is $\sum_{i=1}^{(k+1)-1} i(i+1) = \frac{(k+1)((k+1)-1)((k+1)+1)}{3}$

$$\sum_{i=1}^{k} i(i+1) = \frac{(k+1)(k)(k+2)}{3}.$$

Step 5 of 6

(d)

Objective is to identify what must be shown in the inductive step.

Inductive step:

If the property $P(n)$ is true for $n = k$, then it is prove that $P(n)$ is also true for $n = k+1$.

i.e., for some integer $k \geq 2$

Here $k = n-1$

If $\sum_{i=1}^{k-1} i(i+1) = \frac{k(k-1)(k+1)}{3}$, then prove that

$$\sum_{i=1}^{(k+1)-1} i(i+1) = \frac{(k+1)((k+1)-1)((k+1)+1)}{3}.$$

$$\sum_{i=1}^{k} i(i+1) = \frac{(k+1)(k)(k+2)}{3}$$

Step 6 of 6

Substitute $k = n-1$ in the above formula,

$$\sum_{i=1}^{n-1} i(i+1) = \frac{(n-1+1)(n-1)(n-1+2)}{3}$$

$$\sum_{i=1}^{n-1} i(i+1) = \frac{(n)(n-1)(n+1)}{3}$$

Hence, it is true for $n = k+1$.

Therefore, the inductive step is verified.

Chapter 5.2, Problem 4E

Problem

For each integer n with $n \geq 2$, let $P(n)$ be the formula

$$\sum_{i=1}^{n-1} i(i+1) = \frac{n(n-1)(n+1)}{3}.$$

a. Write $P(2)$. Is $P(2)$ true?

b. Write $P(k)$.

c. Write $P(k+1)$.

d. In a proof by mathematical induction that the formula holds for every integer $n \geq 2$, what must be shown in the inductive step?

Step-by-step solution

Step 1 of 5

a.

Consider the following formula.

$$\sum_{i=1}^{n-1} i(i+1) = \frac{n(n-1)(n+1)}{3}$$

The objective is to first write $P(2)$ and then check whether $P(2)$ is true or not.

Step 2 of 5

Obtain $P(2)$ form the formula given as follows.

$$\sum_{i=1}^{2-1} i(i+1) = \frac{2(2-1)(2+1)}{3}$$

Check whether $P(2)$ is true or not as follows.

Obtain the LHS as follows.

$$\begin{aligned}\sum_{i=1}^{2-1} i(i+1) &= \sum_{i=1}^{1} i(i+1)\\ &= 1(1+1)\\ &= 1(2)\\ &= 2\end{aligned}$$

Obtain the RHS as follows.

$$\begin{aligned}\frac{2(2-1)(2+1)}{3} &= \frac{2(1)(3)}{3}\\ &= 2\end{aligned}$$

Observe that both the LHS and RHS are equal.

Thus, $\sum_{i=1}^{1} i(i+1) = \frac{2(2-1)(2+1)}{3} = 2$

Hence, $P(2)$ is <u>true</u>.

Step 3 of 5

b.

The objective is to write $P(k)$.

Obtain $P(k)$ form the formula given as follows.

$$\sum_{i=1}^{k-1} i(i+1) = \frac{k(k-1)(k+1)}{3}$$

Step 4 of 5

c.

The objective is to write $P(k+1)$.

Obtain $P(k+1)$ form the formula given as follows.

$$\begin{aligned}\sum_{i=1}^{(k+1)-1} i(i+1) &= \frac{(k+1)((k+1)-1)((k+1)+1)}{3}\\ &= \frac{(k+1)(k+1-1)(k+1+1)}{3}\\ &= \frac{k(k+1)(k+2)}{3}\end{aligned}$$

Step 5 of 5

d.

The objective is to find what has to be shown in the inductive step.

For mathematical induction $k \geq 2$ such that k is any integer, then in the inductive step the following must be shown i.e. if $P(k)$, then $P(k+1)$.

That is if $\sum_{i=1}^{k-1} i(i+1) = \frac{k(k-1)(k+1)}{3}$, then $\sum_{i=1}^{(k+1)-1} i(i+1) = \frac{k(k+1)(k+2)}{3}$.

Chapter 5.2, Problem 6E

Problem

Prove each statement *i* using mathematical induction. Do not derive them from Theorem 1 or Theorem 2.

Theorem 1

Sum of the First n Integers

For all integers $n \geq 1$,

$$1+2+\cdots+n=\frac{n(n+1)}{2}$$

Proof (by mathematical induction):

Let the property $P(n)$ be the equation

$$1+2+3+\cdots+n=\frac{n(n+1)}{2}. \qquad \leftarrow P(n)$$

Show that P(1) is true:

To establish $P(1)$, we must show that

$$1=\frac{1(1+1)}{2} \qquad \leftarrow P(1)$$

But the left-hand side of this equation is 1 and the right-hand side is

$$\frac{1(1+1)}{2}=\frac{2}{2}=1$$

also. Hence $P(1)$ is true.

Show that for all integers k≥ 1, if P(k) is true then P(k + 1) is also true:

[Suppose that $P(k)$ is true for a particular but arbitrarily chosen integer $k \geq 1$.

That is:] Suppose that k is any integer with $k \geq 1$ such that

$$1+2+3+\cdots+k=\frac{k(k+1)}{2} \qquad \leftarrow P(k) \text{ inductive hypothesis}$$

[We must show that $P(k + 1)$ is true. That is:] We must show that

$$1+2+3+\cdots+(k+1)=\frac{(k+1)[(k+1)+1]}{2},$$

or, equivalently, that

$$1+2+3+\cdots+(k+1)=\frac{(k+1)(k+2)}{2}. \qquad \leftarrow P(k+1)$$

[We will show that the left-hand side and the right-hand side of P(k + 1) are equal to the same quantity and thus are equal to each other.]

The left-hand side of $P(k + 1)$ is

$$\begin{aligned}
&1+2+3+\cdots+(k+1) \\
&\quad=1+2+3+\cdots+k+(k+1) && \text{by making the next-to-last term explicit} \\
&\quad=\frac{k(k+1)}{2}+(k+1) && \text{by substitution from the inductive hypothesis} \\
&\quad=\frac{k(k+1)}{2}+\frac{2(k+1)}{2} \\
&\quad=\frac{k^2+k}{2}+\frac{2k+2}{2} \\
&\quad=\frac{k^2+3k+1}{2} && \text{by algebra.}
\end{aligned}$$

And the right-hand side of $P(k + 1)$ is

$$\frac{(k+1)(k+2)}{2}=\frac{k^2+3k+1}{2}.$$

Thus the two sides of $P(k + 1)$ are equal to the same quantity and so they are equal to each other. Therefore the equation $P(k + 1)$ is true [as was *to be shown*].

[Since we have proved both the basis step and the inductive step, we conclude that the theorem is true.]

Theorem 2

Sum of a Geometric Sequence

For any real number r except 1, and any integer $n \geq 0$,

$$\sum_{i=0}^{n} r^i=\frac{r^{n+1}-1}{r-1}.$$

Proof (by mathematical induction):

Suppose r is a particular but arbitrarily chosen real number that is not equal to 1, and let the property $P(n)$ be the equation

$$\sum_{i=0}^{n} r^i=\frac{r^{n+1}-1}{r-1} \qquad \leftarrow P(n)$$

We must show that $P(n)$ is true for all integers $n \geq 0$. We do this by mathematical induction on n.

Show that P(0) is true:

To establish $P(0)$, we must show that

$$\sum_{i=0}^{0} r^i=\frac{r^{0+1}-1}{r-1} \qquad \leftarrow P(0)$$

The left-hand side of this equation is $r0 = 1$ and the right-hand side is

$$\frac{r^{0+1}-1}{r-1}=\frac{r-1}{r-1}=1$$

also because $r1 = r$ and $r = 1$. Hence $P(0)$ is true.

Show that for all integers k≥ 0, if P(k) is true then P(k+1) is also true:

[Suppose that $P(k)$ is true for a particular but arbitrarily chosen integer $k \geq 0$. That is:]

Let k be any integer with $k \geq 0$, and suppose that

$$\sum_{i=0}^{k} r^i=\frac{r^{k+1}-1}{r-1} \qquad \leftarrow P(k) \text{ inductive hypothesis}$$

[We must show that $P(k + 1)$ is true. That is:] We must show that

$$\sum_{i=0}^{k+1} r^i=\frac{r^{(k+1)+1}-1}{r-1},$$

or, equivalently, that

$$\sum_{i=0}^{k+1} r^i=\frac{r^{k+2}-1}{r-1}. \qquad \leftarrow P(k+1)$$

[We will show that the left-hand side of $P(k + 1)$ equals the right-hand side.]

The left-hand side of $P(k + 1)$ is

$$\begin{aligned}
\sum_{i=0}^{k+1} r^i &= \sum_{i=0}^{k} r^i+r^{k+1} && \text{by writing the } (k+1)\text{st term separately from the first } k \text{ terms} \\
&=\frac{r^{k+1}-1}{r-1}+r^{k+1} && \text{by substitution from the inductive hypothesis} \\
&=\frac{r^{k+1}-1}{r-1}+\frac{r^{k+1}(r-1)}{r-1} && \text{by multiplying the numerator and denominator of the second term by } (r-1) \text{ to obtain a common denominator} \\
&=\frac{(r^{k+1}-1)+r^{k+1}(r-1)}{r-1} && \text{by adding fractions} \\
&=\frac{r^{k+1}-1+r^{k+2}-r^{k+1}}{r-1} && \text{by multiplying out and using the fact that } r^{k+1}\cdot r=r^{k+1},\ r^{k+1}\cdot r=r^{k+2} \\
&=\frac{r^{k+2}-1}{r-1} && \text{by canceling the } r^{k+1}\text{'s.}
\end{aligned}$$

which is the right-hand side of $P(k + 1)$ [*as was to be shown.*]

[Since we have proved the basis step and the inductive step, we conclude that the theorem is true.]

Exercise

For all integers $n \geq 1$, $2 + 4 + 6 + \ldots + 2n = n2 + n$.

Step-by-step solution

Step 1 of 4

Proof

For the given statement, the property is the equation

$P(n) \Rightarrow 2+4+6+\ldots\ldots\ldots+2n=n^2+n$

Show that the property is true for $n=1$

LHS

When we substitute 1 for *n*,

The left-hand side is the sum of all the even integers from 2 to 2.1

The sum is 2

RHS

$1^2+1=1+1=2$

$\therefore$ LHS = RHS

$\therefore$ The property is true for $n=1$

Step 2 of 4

Show that for all integers $k \geq 1$, If the property is true for $n=k$, then it is also true for $n=k+1$

Let *k* be any integer where $k \geq 1$ and suppose that the property is true for $n=k$.

i.e., suppose that

$2+4+6+\ldots\ldots\ldots\ldots+2k=k^2+k$ (the inductive hypothesis)

We must show that the property is true for $n=k+1$, i.e., we must show that

$2+4+6+\ldots\ldots\ldots\ldots+2k+2(k+1)=(k+1)^2+(k+1)$

$=(k^2+2k+1)+(k+1)$ (by algebra)

$=k^2+3k+2$

$\Rightarrow 2+4+6+\ldots\ldots\ldots\ldots+2k+2(k+1)=k^2+3k+2 \qquad \rightarrow(1)$

Step 3 of 4

LHS of (1)

$2+4+6+\ldots\ldots\ldots\ldots+2k+2(k+1)=2+4+6+\ldots\ldots\ldots\ldots+(2k+2)$

$=2+4+6+\ldots\ldots\ldots\ldots+2k+(2k+2)$

Step 4 of 4

$=[2+4+6+\ldots\ldots\ldots\ldots+2k]+(2k+2)$

$=(k^2+k)+(2k+2)$ (by the inductive hypothesis)

$=k^2+k+2k+2$

$=k^2+3k+2$

= RHS of (1)

Thus, the property is true for $n=k+1$

$\therefore$ The given property is true for all $n \geq 1$

Chapter 5.2, Problem 7E

Problem

Prove each statement *i* using mathematical induction. Do not derive them from Theorem 1 or Theorem 2.

Theorem 1

Sum of the First n integers

For all integers $n \geq 1$,

$$1 + 2 + \cdots + n = \frac{n(n+1)}{2}.$$

Proof (by mathematical induction):

Let the property $P(n)$ be the equation

$$1 + 2 + 3 + \cdots + n = \frac{n(n+1)}{2}. \qquad \leftarrow P(n)$$

Show that P(1) is true:

To establish $P(1)$, we must show that

$$1 = \frac{1(1+1)}{2} \qquad \leftarrow P(1)$$

But the left-hand side of this equation is 1 and the right-hand side is

$$\frac{1(1+1)}{2} = \frac{2}{2} = 1$$

also. Hence $P(1)$ is true.

Show that for all integers k≥ 1, if P(k) is true then P(k + 1) is also true:

[Suppose that $P(k)$ is true for a particular but arbitrarily chosen integer $k \geq 1$.

That is,] Suppose that k is any integer with $k \geq 1$ such that

$$1 + 2 + 3 + \cdots + k = \frac{k(k+1)}{2} \qquad \begin{array}{l}\leftarrow P(k)\\ \text{inductive hypothesis}\end{array}$$

[We must show that $P(k + 1)$ is true. That is,] We must show that

$$1 + 2 + 3 + \cdots + (k+1) = \frac{(k+1)[(k+1)+1]}{2}.$$

or, equivalently, that

$$1 + 2 + 3 + \cdots + (k+1) = \frac{(k+1)(k+2)}{2}. \qquad \leftarrow P(k+1)$$

[We will show that the left-hand side and the right-hand side of P(k + 1) are equal to the same quantity and thus are equal to each other.]

The left-hand side of $P(k + 1)$ is

$$\begin{aligned}
&1 + 2 + 3 + \cdots + (k+1) \\
&\quad = 1 + 2 + 3 + \cdots + k + (k+1) && \text{by making the next-to-last term explicit} \\
&\quad = \frac{k(k+1)}{2} + (k+1) && \text{by substitution from the inductive hypothesis} \\
&\quad = \frac{k(k+1)}{2} + \frac{2(k+1)}{2} \\
&\quad = \frac{k^2+k}{2} + \frac{2k+2}{2} \\
&\quad = \frac{k^2+3k+1}{2} && \text{by algebra.}
\end{aligned}$$

And the right-hand side of $P(k + 1)$ is

$$\frac{(k+1)(k+2)}{2} = \frac{k^2+3k+1}{2}.$$

Thus the two sides of $P(k + 1)$ are equal to the same quantity and so they are equal to each other. Therefore the equation $P(k + 1)$ is true [as was *to be shown*].

[Since we have proved both the basis step and the inductive step, we conclude that the theorem is true.]

Theorem 2

Sum of a Geometric Sequence

For any real number r except 1, and any integer $n \geq 0$,

$$\sum_{i=0}^{n} r^i = \frac{r^{n+1}-1}{r-1}.$$

Proof (by mathematical induction):

Suppose r is a particular but arbitrarily chosen real number that is not equal to 1, and let the property $P(n)$ be the equation

$$\sum_{i=0}^{n} r^i = \frac{r^{n+1}-1}{r-1} \qquad \leftarrow P(n)$$

We must show that $P(n)$ is true for all integers $n \geq 0$. We do this by mathematical induction on n.

Show that P(0) is true:

To establish $P(0)$, we must show that

$$\sum_{i=0}^{0} r^i = \frac{r^{0+1}-1}{r-1} \qquad \leftarrow P(0)$$

The left-hand side of this equation is $r0 = 1$ and the right-hand side is

$$\frac{r^{0+1}-1}{r-1} = \frac{r-1}{r-1} = 1$$

also because $r1 = r$ and $r = 1$. Hence $P(0)$ is true.

Show that for all integers k≥ 0, if P(k) is true then P(k+1) is also true:

[Suppose that $P(k)$ is true for a particular but arbitrarily chosen integer $k \geq 0$. That is,]

Let k be any integer with $k \geq 0$, and suppose that

$$\sum_{i=0}^{k} r^i = \frac{r^{k+1}-1}{r-1} \qquad \begin{array}{l}\leftarrow P(k)\\ \text{inductive hypothesis}\end{array}$$

[We must show that $P(k + 1)$ is true. That is,] We must show that

$$\sum_{i=0}^{k+1} r^i = \frac{r^{(k+1)+1}-1}{r-1}.$$

or, equivalently, that

$$\sum_{i=0}^{k+1} r^i = \frac{r^{k+2}-1}{r-1}. \qquad \leftarrow P(k+1)$$

[We will show that the left-hand side of $P(k + 1)$ equals the right-hand side.]

The left-hand side of $P(k + 1)$ is

$$\begin{aligned}
\sum_{i=0}^{k+1} r^i &= \sum_{i=0}^{k} r^i + r^{k+1} && \text{by writing the } (k+1)\text{st term separately from the first } k \text{ terms} \\
&= \frac{r^{k+1}-1}{r-1} + r^{k+1} && \text{by substitution from the inductive hypothesis} \\
&= \frac{r^{k+1}-1}{r-1} + \frac{r^{k+1}(r-1)}{r-1} && \text{by multiplying the numerator and denominator of the second term by } (r-1) \text{ to obtain a common denominator} \\
&= \frac{(r^{k+1}-1)+r^{k+1}(r-1)}{r-1} && \text{by adding fractions} \\
&= \frac{r^{k+1}-1+r^{k+2}-r^{k+1}}{r-1} && \text{by multiplying out and using the fact that } r^{k+1} \cdot r = r^{k+1} \text{ or } r^{k+2} \\
&= \frac{r^{k+2}-1}{r-1} && \text{by canceling the } r^{k+1}\text{'s.}
\end{aligned}$$

which is the right-hand side of $P(k + 1)$ [as was *to be shown*.]

[Since we have proved the basis step and the inductive step, we conclude that the theorem is true.]

Exercise

For all integers $n \geq 1$,

$$1 + 6 + 11 + 16 + \cdots + (5n-4) = \frac{n(5n-3)}{2}.$$

Step-by-step solution

Step 1 of 3

Let the statement is, "for all integer $n \geq 1$,

$$1 + 6 + 11 + 16 + \cdots + (5n-4) = \frac{n(5n-3)}{2}$$

Proof: For the given statement, the property $P(n)$ is the equation, i.e.,

$$P(n) = 1 + 6 + 11 + 16 + \cdots + (5n-4) = \frac{n(5n-3)}{2}$$

Step 1: Show that $P(1)$ is true.

To prove $P(1)$, it must be shown that when 1 is substituted into the equation in place of n,

The left-hand side equals the right-hand side.

Now the left-hand side of $P(1)$ is 1, and the right-hand side is $\frac{1\cdot(5(1)-3)}{2} = \frac{2}{2} = 1$ also.

Thus, $P(1)$ is true.

Step 2 of 3

Step 2: Show that for all integer $k \geq 1$, if $P(k)$ is true then $P(k+1)$ is true.

Let k be any integer with $k \geq 1$ and suppose $P(k)$ is true, i.e.,

$1 + 6 + 11 + 16 + \cdots + (5k-4) = \frac{k(5k-3)}{2}$ (inductive hypothesis)

Now, it must be shown that $P(k+1)$ is true, i.e.,

$$1 + 6 + 11 + 16 + \cdots + (5(k+1)-4) = \frac{(k+1)(5(k+1)-3)}{2}$$

Or, equivalently,

$$P(k+1) = 1 + 6 + 11 + 16 + \cdots + (5(k+1)-4) = \frac{(k+1)(5k+2)}{2}$$

$$= \frac{5k^2+7k+2}{2}$$

Step 3 of 3

But the left-hand side of $P(k+1)$ is

$1 + 6 + 11 + 16 + \cdots + (5(k+1)-4)$

$= 1 + 6 + 11 + 16 + \cdots + (5k-4) + (5(k+1)-4)$ (by making the next-to-last term explicit)

$= \frac{k(5k-3)}{2} + (5(k+1)-4)$ (by substitution from the inductive hypothesis)

$= \frac{k(5k-3)}{2} + (5k+1)$

$= \frac{5k^2-3k+10k+2}{2}$

$= \frac{5k^2+7k+2}{2}$

And this is right-hand side of $P(k+1)$.

Hence the property is true for $n = k+1$.

Thus, $P(n)$ is true for all the integers $n \geq 1$.

Chapter 5.2, Problem 9E

Problem

Prove each statement *i* using mathematical induction. Do not derive them from Theorem 1 or Theorem 2.

Theorem 1

Sum of the First n Integers

For all integers $n \geq 1$,

$$1+2+\cdots+n=\frac{n(n+1)}{2}.$$

Proof (by mathematical induction):

Let the property $P(n)$ be the equation

$$1+2+3+\cdots+n=\frac{n(n+1)}{2}. \quad \leftarrow P(n)$$

Show that P(1) is true:

To establish $P(1)$, we must show that

$$1=\frac{1(1+1)}{2} \qquad \leftarrow P(1)$$

But the left-hand side of this equation is 1 and the right-hand side is

$$\frac{1(1+1)}{2}=\frac{2}{2}=1$$

also. Hence $P(1)$ is true.

Show that for all integers k≥1, if P(k) is true then P(k + 1) is also true:

[Suppose that $P(k)$ is true for a particular but arbitrarily chosen integer $k \geq 1$.

That is,] Suppose that k is any integer with $k \geq 1$ such that

$$1+2+3+\cdots+k=\frac{k(k+1)}{2} \qquad \begin{array}{l}\leftarrow P(k)\\ \text{inductive hypothesis}\end{array}$$

[We must show that $P(k+1)$ is true. That is,] We must show that

$$1+2+3+\cdots+(k+1)=\frac{(k+1)[(k+1)+1]}{2},$$

or, equivalently, that

$$1+2+3+\cdots+(k+1)=\frac{(k+1)(k+2)}{2}. \quad \leftarrow P(k+1)$$

[We will show that the left-hand side and the right-hand side of P(k + 1) are equal to the same quantity and thus are equal to each other.]

The left-hand side of $P(k+1)$ is

$$\begin{aligned}
&1+2+3+\cdots+(k+1)\\
&\quad=[1+2+3+\cdots+k]+(k+1) && \text{by making the next-to-last term explicit}\\
&\quad=\frac{k(k+1)}{2}+(k+1) && \text{by substitution from the inductive hypothesis}\\
&\quad=\frac{k(k+1)}{2}+\frac{2(k+1)}{2}\\
&\quad=\frac{k^2+k}{2}+\frac{2k+2}{2}\\
&\quad=\frac{k^2+3k+1}{2} && \text{by algebra.}
\end{aligned}$$

And the right-hand side of $P(k+1)$ is

$$\frac{(k+1)(k+2)}{2}=\frac{k^2+3k+1}{2}$$

Thus the two sides of $P(k+1)$ are equal to the same quantity and so they are equal to each other. Therefore the equation $P(k+1)$ is true [*as was to be shown*].

[Since we have proved both the basis step and the inductive step, we conclude that the theorem is true.]

Theorem 2

Sum of a Geometric Sequence

For any real number r except 1, and any integer $n \geq 0$,

$$\sum_{i=0}^{n} r^i=\frac{r^{n+1}-1}{r-1}.$$

Proof (by mathematical induction):

Suppose r is a particular but arbitrarily chosen real number that is not equal to 1, and let the property $P(n)$ be the equation

$$\sum_{i=0}^{n} r^i=\frac{r^{n+1}-1}{r-1} \quad \leftarrow P(n)$$

We must show that $P(n)$ is true for all integers $n \geq 0$. We do this by mathematical induction on n.

Show that P(0) is true:

To establish $P(0)$, we must show that

$$\sum_{i=0}^{0} r^i=\frac{r^{0+1}-1}{r-1} \quad \leftarrow P(0)$$

The left-hand side of this equation is $r0 = 1$ and the right-hand side is

$$\frac{r^{0+1}-1}{r-1}=\frac{r-1}{r-1}=1$$

also because $r1 = r$ and $r = 1$. Hence $P(0)$ is true.

Show that for all integers k≥0, if P(k) is true then P(k+1) is also true:

[Suppose that $P(k)$ is true for a particular but arbitrarily chosen integer $k \geq 0$. That is,]

Let k be any integer with $k \geq 0$, and suppose that

$$\sum_{i=0}^{k} r^i=\frac{r^{k+1}-1}{r-1} \quad \begin{array}{l}\leftarrow P(k)\\ \text{inductive hypothesis}\end{array}$$

[We must show that $P(k+1)$ is true. That is,] We must show that

$$\sum_{i=0}^{k+1} r^i=\frac{r^{(k+1)+1}-1}{r-1},$$

or, equivalently, that

$$\sum_{i=0}^{k+1} r^i=\frac{r^{k+2}-1}{r-1}. \quad \leftarrow P(k+1)$$

[We will show that the left-hand side of $P(k+1)$ equals the right-hand side.]

The left-hand side of $P(k+1)$ is

$$\begin{aligned}
\sum_{i=0}^{k+1} r^i &= \sum_{i=0}^{k} r^i+r^{k+1} && \text{by writing the } (k+1)\text{st term separately from the first } k \text{ terms}\\
&=\frac{r^{k+1}-1}{r-1}+r^{k+1} && \text{by substitution from the inductive hypothesis}\\
&=\frac{r^{k+1}-1}{r-1}+\frac{r^{k+1}(r-1)}{r-1} && \text{by multiplying the numerator and denominator of the second term by } (r-1) \text{ to obtain a common denominator}\\
&=\frac{(r^{k+1}-1)+r^{k+1}(r-1)}{r-1} && \text{by adding fractions}\\
&=\frac{r^{k+1}-1+r^{k+2}-r^{k+1}}{r-1} && \text{by multiplying out and using the fact that } r^{k+1}\cdot r=r^{k+1}\cdot r^1=r^{k+2}\\
&=\frac{r^{k+2}-1}{r-1} && \text{by canceling the } r^{k+1}\text{'s.}
\end{aligned}$$

which is the right-hand side of $P(k+1)$ [*as was to be shown.*]

[Since we have proved the basis step and the inductive step, we conclude that the theorem is true.]

Exercise

For all integers $n \geq 3$,

$$4^3+4^4+4^5+\cdots+4^n=\frac{4(4^n-16)}{3}$$

Step-by-step solution

Step 1 of 3

Consider the statement:

$P(n):\ 4^3+4^4+4^5+\cdots+4^n=\frac{4(4^n-16)}{3}$ For all integers $n \geq 3$.

Objective is to prove the above statement by using Mathematical induction.

Basis step: Prove that the property is true for $n=3$.

LHS:

The left-hand side is the sum of all terms from 4^3 to 4^3, i.e., just 4^3, itself.

RHS:

$$\begin{aligned}
&\frac{4(4^3-16)}{3}=\frac{4\times(64-16)}{3} \qquad (4^3=4^2\times 4=16\times 4=64)\\
&=\frac{4\times 48}{3}\\
&=\frac{4\times 3\times 16}{3}\\
&=4\times 16\\
&=4\times 4^2\\
&=4^3
\end{aligned}$$

LHS = RHS.

Hence, the statement $P(n)$ is true for $n=3$.

Step 2 of 3

Suppose that the property is true for $n=k$,

That is, the statement $P(k): 4^3+4^4+4^5+\cdots+4^k=\frac{4(4^k-16)}{3}$ is true.

Now, we can show that

$$4^3+4^4+4^5+\cdots+4^k+4^{k+1}=\frac{4(4^{k+1}-16)}{3} \qquad \to(1)$$

Step 3 of 3

LHS of (1):

$$\begin{aligned}
&\text{LHS}=4^3+4^4+4^5+\cdots+4^k+4^{k+1}\\
&=\left[4^3+4^4+4^5+\cdots+4^k\right]+4^{k+1}\\
&=\frac{4(4^k-16)}{3}+4^{k+1}\\
&=\frac{4(4^k-16)+3\times 4^{k+1}}{3} && \text{Take } LCM.\\
&=\frac{4(4^k-16)+3\times 4^k\times 4}{3} && (\text{Since } a^{m+n}=a^m\times a^n)\\
&=\frac{4\left[4^k-16+3\times 4^k\right]}{3} && \text{Take 4 as common}\\
&=\frac{4\left[4^k(1+3)-16\right]}{3}\\
&=\frac{4(4^k\times 4-16)}{3}\\
&=\frac{4(4^{k+1}-16)}{3}\\
&=\text{RHS of (1)}
\end{aligned}$$

$$4^3+4^4+4^5+\cdots+4^k+4^{k+1}=\frac{4(4^{k+1}-16)}{3}.$$

Thus, the statement $P(n)$ is true for $n=k+1$.

Therefore, by the principle of mathematical induction, the statement $P(n)$ is true for all $n \geq 3$.

Chapter 5.2, Problem 10E

Problem

Prove the statements by mathematical induction.

Exercise

$1^2+2^2+\cdots+n^2=\frac{n(n+1)(2n+1)}{6}$, for all integers $n \geq 1$.

Step-by-step solution

Step 1 of 2

Consider the statement:

For all integers $n \geq 1$, $1^2+2^2+3^2+\cdots+n^2=\frac{n(n+1)(2n+1)}{6}$.

Objective is to prove this statement by using Mathematical induction.

Show that $1^2+2^2+3^2+\cdots+n^2=\frac{n(n+1)(2n+1)}{6}, \forall n \geq 1$

Suppose that the given statement is $P(k)$.

When $k=1$,

$$\begin{aligned} P(1) &= 1^2 \\ &= 1 \\ &= \text{LHS} \end{aligned}$$

$$\begin{aligned} \text{RHS} &= \frac{(1)(1+1)(2+1)}{6} \\ &= \frac{6}{6} \\ &= 1 \end{aligned}$$

$\text{LHS}=\text{RHS}$

Hence, the property is true for $P(1)$. $\cdots\cdots(1)$

Step 2 of 2

Assume that $P(m)$ is true.

i.e., $1^2+2^2+3^2+\cdots+m^2=\frac{m(m+1)(2m+1)}{6}$ $\cdots\cdots(2)$

When $k=m+1$, $P(m+1)$

$\text{LHS}=$ Sum of the squares of $(m+1)$ terms in the given summation

Add the $m+1^{th}$ term on both sides of equation (2),

$$\begin{aligned} \left\{1^2+2^2+3^2+\cdots+m^2\right\}+(m+1)^2 &= \left\{\frac{m(m+1)(2m+1)}{6}\right\}+(m+1)^2 \\ &= \frac{m(m+1)(2m+1)+6(m+1)^2}{6} \\ &= \frac{(m+1)\{m(2m+1)+6(m+1)\}}{6} \\ &= \frac{(m+1)\{2m^2+7m+6\}}{6} \\ &= \frac{(m+1)\{2m^2+4m+3m+6\}}{6} \\ &= \frac{(m+1)[2m(m+2)+3(m+2)]}{6} \\ &= \frac{(m+1)(m+2)(2m+3)}{6} \\ &= \frac{(m+1)(m+1+1)\{2(m+1)+1\}}{6} \end{aligned}$$

This expression is in the required form.

So, $P(m+1)$ is true. $\cdots\cdots(3)$

From equations $(1),(2)$, and (3) satisfy the hypotheses of mathematical induction.

So, by the result of mathematical induction, the given statement is true for all integers $n \geq 1$.

i.e., $1^2+2^2+3^2+\cdots+n^2=\frac{n(n+1)(2n+1)}{6}, \forall n \geq 1$

Comments (1)

What happened to the exponent in the second line?

Chapter 5.2, Problem 11E

Problem

Prove the statements by mathematical induction.

Exercise

$1^3 + 2^3 + \cdots + n^3 = \left[\frac{n(n+1)}{2}\right]^2$, for all integers $n \geq 1$.

Step-by-step solution

Step 1 of 4

$$1^3 + 2^3 + 3^3 + \ldots\ldots\ldots\ldots + n^3 = \left\{\frac{n(n+1)}{2}\right\}^2 \ \forall\ n \geq 1$$

Suppose that the given statement is $P(n)$

When $n = 1,\ P(1) = 1^3 = 1 = \text{LHS}$

$$\left\{\frac{1(1+1)}{2}\right\}^2 = 1^2 = 1 = \text{RHS}$$

$\text{LHS} = \text{RHS}$

So $P(1)$ is true ------- (1)

Step 2 of 4

Inductive step

Assume that $P(m)$ is true for m

i.e., $1^3 + 2^3 + 3^3 + \ldots\ldots\ldots\ldots + m^3 = \left\{\frac{m(m+1)}{2}\right\}^2 \rightarrow (2)$

When $k = m+1$, the sum of the $m+1$ terms is nothing but adding the $m+1^{th}$ term on both sides

$$\left\{1^3 + 2^3 + 3^3 + \ldots\ldots\ldots\ldots + m^3\right\} + (m+1)^3 = \frac{m^2(m+1)^2}{4} + (m+1)^3$$

$$= \frac{m^2(m+1)^2 + 4(m+1)^3}{4}$$

$$= \frac{m^2(m+1)^2 + 4(m+1)^2(m+1)}{4}$$

$$= \frac{(m+1)^2\left(m^2 + 4(m+1)\right)}{4}$$

$$= \frac{(m+1)^2\left(m^2 + 4m + 4\right)}{4}$$

$$= \frac{(m+1)^2(m+2)^2}{2^2}$$

Step 3 of 4

$$= \left\{\frac{(m+1)(m+2)}{2}\right\}^2$$

Step 4 of 4

This is the required form

So $P(m+1)$ is true -------- (3)

(1), (2), and (3) satisfy the hypothesis of mathematical induction

So by the result of the mathematical induction, the given statement is true for every natural value of n

i.e., $1^3 + 2^3 + 3^3 + \ldots\ldots\ldots\ldots + n^3 = \left\{\frac{n(n+1)}{2}\right\}^2$

Chapter 5.2, Problem 12E

Problem

Prove the statements by mathematical induction.

Exercise

$\frac{1}{1\cdot 2}+\frac{1}{2\cdot 3}+\cdots+\frac{1}{n(n+1)}=\frac{n}{n+1}$, for all integers $n \geq 1$.

Step-by-step solution

Step 1 of 3

Consider the statement:

For all integers $n \geq 1$, $\frac{1}{1\cdot 2}+\frac{1}{2\cdot 3}+\frac{1}{3\cdot 4}+\cdots+\frac{1}{n(n+1)}=\frac{n}{n+1}$.

Objective is to prove this statement by using mathematical induction.

Step 2 of 3

Suppose that the given statement is $P(n)$.

When $n=1$,

$$\begin{aligned} P(1) &= \frac{1}{1\cdot 2} \\ &= \frac{1}{2} \\ &= \text{LHS} \end{aligned}$$

$$\begin{aligned} \text{RHS} &= \frac{n}{n+1} \\ &= \frac{1}{1+1} \\ &= \frac{1}{2} \end{aligned}$$

$\text{LHS}=\text{RHS}$. Hence, the statement is true for $n=1$. $\cdots\cdots(1)$

Step 3 of 3

Suppose that the statement is true for $n=m$.

That is,

$$\frac{1}{1\cdot 2}+\frac{1}{2\cdot 3}+\frac{1}{3\cdot 4}+\cdots+\frac{1}{m(m+1)}=\frac{m}{m+1} \quad \cdots\cdots(2)$$

To prove the result by mathematical induction it is enough to show that the result is true for $n=m+1$.

When $n=m+1$, the sum of the $m+1$ terms is calculated by adding the $m+1^{th}$ term on both sides,

$$\begin{aligned} \left\{\frac{1}{1\cdot 2}+\frac{1}{2\cdot 3}+\frac{1}{3\cdot 4}+\cdots+\frac{1}{m(m+1)}\right\}+\left(\frac{1}{(m+1)(m+2)}\right) &= \frac{m}{m+1}+\frac{1}{(m+1)(m+2)} \\ &= \frac{m(m+2)+1}{(m+1)(m+2)} \\ &= \frac{m^2+2m+1}{(m+1)(m+2)} \\ &= \frac{(m+1)^2}{(m+1)(m+2)} \end{aligned}$$

$$\begin{aligned} &= \frac{m+1}{m+2} \\ &= \frac{m+1}{(m+1)+1} \end{aligned}$$

This expression is in the required form.

$$\frac{1}{1\cdot 2}+\frac{1}{2\cdot 3}+\frac{1}{3\cdot 4}+\cdots+\frac{1}{(m+1)((m+1)+1)}=\frac{m+1}{(m+1)+1}$$

Hence, $P(m+1)$ is true. $\cdots\cdots(3)$

From equations $(1),(2)$, and (3) satisfy the hypothesis of mathematical induction.

So, by the result of mathematical induction, the given statement is true for all integers $n \geq 1$.

That is,

$$\frac{1}{1\cdot 2}+\frac{1}{2\cdot 3}+\frac{1}{3\cdot 4}+\cdots+\frac{1}{n(n+1)}=\frac{n}{n+1}, \ \forall n \geq 1.$$

Chapter 5.2, Problem 13E

Problem

Prove the statements by mathematical induction.

Exercise

$\sum_{i=1}^{n-1} i(i+1) = \frac{n(n-1)(n+1)}{3}$, for all integers $n \geq 2$.

Step-by-step solution

Step 1 of 5

Let $P(n)$ represent the statement that $\sum_{i=1}^{n-1} i(i+1) = \frac{n(n-1)(n+1)}{3}, \forall\ n \geq 2$

Show that the property is true for $n = 2$

When $n = 2$, the LHS of $P(n)$ is $\sum_{i=1}^{1} i(i+1) = 1(1+1) = 2$, and the

RHS is $\frac{2(2-1)(2+1)}{3} = \frac{6}{3} = 2$

$\therefore$ The property is true for $n = 2$

Step 2 of 5

Show that for all integers $k \geq 2$, if the property is true for $n = k$, then it is true for $n=k+1$

Assume that the property is true for $n = k$

That is, $\sum_{i=1}^{k-1} i(i+1) = \frac{k(k-1)(k+1)}{3}$ (the inductive hypothesis)

We must show that the property is true for $n = k + 1$

Step 3 of 5

That is, we must show that $\sum_{i=1}^{k} i(i+1) = \frac{(k+1)(k)(k+2)}{3}, \forall\ n \geq 2$

Step 4 of 5

Now, $\sum_{i=1}^{k} i(i+1)$

$= \sum_{i=1}^{k-1} i(i+1) + k(k+1)$ (by writing the last term separately)

$= \frac{k(k-1)(k+1)}{3} + k(k+1)$ (by the inductive hypothesis)

$= \frac{k(k-1)(k+1)}{3} + \frac{3k(k+1)}{3}$ (since $\frac{3}{3} = 1$)

$= \frac{k(k-1)(k+1) + 3k(k+1)}{3}$

$= \frac{k(k+1)[(k-1)+3]}{3}$

Comments (1)

can you explain the first line ? from where you got k (k+1)

Step 5 of 5

$= \frac{k(k+1)(k+2)}{3}$

$\therefore$ $P(n)$ is also true for $n = k+1$

Thus, from the principle of mathematical induction, the given property is true for all integers $n \geq 2$

Chapter 5.2, Problem 14E

Problem

$\sum_{i=1}^{n+1} i \cdot 2^i = n \cdot 2^{n+2} + 2$, for all integers $n \geq 0$.

Step-by-step solution

Step 1 of 7

The objective is to prove that $\sum_{i=1}^{n+1} i \cdot 2^i = n \cdot 2^{n+2} + 2$ for all integers $n \geq 0$.

Principle of Mathematical Induction: Let $P(n)$ be a property that is defined for integers *n*, and let *a* be a fixed integer. Then the statement $P(n)$ is true for all integers $n \geq a$ if

(i) $P(a)$ is true.

(ii) For all integers $k \geq a$, if $P(k)$ is true then $P(k+1)$ is true.

Step 2 of 7

Let the property $P(n)$ be the equation

$$\sum_{i=1}^{n+1} i \cdot 2^i = n \cdot 2^{n+2} + 2$$

Since the property should be true for all integers $n \geq 0$, take $a = 0$.

Step 1 (basic step): Show that $P(0)$ is true.

To establish $P(0)$, show that

$$\sum_{i=1}^{1} i \cdot 2^i = 0 \cdot 2^2 + 2$$

Step 3 of 7

The left-hand side of the equation is

$$\begin{aligned}\sum_{i=1}^{1} i \cdot 2^i &= 1 \cdot 2^1 \\ &= 2\end{aligned}$$

Step 4 of 7

The right-hand side of the equation is

$$\begin{aligned}0 \cdot 2^2 + 2 &= 0 + 2 \\ &= 2\end{aligned}$$

Hence, $\sum_{i=1}^{1} i \cdot 2^i = 0 \cdot 2^2 + 2$, and $P(0)$ is true.

Step 5 of 7

Step 2: Show that for all integers $k \geq 0$, if $P(k)$ is true then $P(k+1)$ is also true.

Suppose that $P(k)$ is true for a particular but arbitrarily chosen integer $k \geq 0$.

That is, suppose that *k* is any integer with $k \geq 0$ such that

$$\sum_{i=1}^{k+1} i \cdot 2^i = k \cdot 2^{k+2} + 2 \quad \text{.....(1)}$$

To show that $P(k+1)$ is true. That is, show that

$$\sum_{i=1}^{(k+1)+1} i \cdot 2^i = (k+1) \cdot 2^{(k+1)+2} + 2$$

Step 6 of 7

The left-hand side of $P(k+1)$ is

$$\begin{aligned}\sum_{i=1}^{(k+1)+1} i \cdot 2^i &= \sum_{i=1}^{k+2} i \cdot 2^i \\ &= \sum_{i=1}^{k+1} i \cdot 2^i + (k+2) \cdot 2^{(k+2)} \\ &= k \cdot 2^{k+2} + 2 + (k+2) \cdot 2^{(k+2)} \qquad \text{substituting for } \sum_{i=1}^{k+1} i \cdot 2^i \text{ from (1)} \\ &= k \cdot 2^{k+2} + (k+2) \cdot 2^{(k+2)} + 2\end{aligned}$$

$$\begin{aligned}&= 2^{k+2}(k+k+2) + 2 \\ &= 2^{k+2}(2k+2) + 2 \\ &= 2^{k+2} \cdot 2(k+1) + 2 \\ &= 2^{k+2+1}(k+1) + 2 \\ &= (k+1)2^{(k+1)+2} + 2 \\ &= \text{right-hand side}\end{aligned}$$

Hence, $P(k+1)$ is true.

Step 7 of 7

Since both the basic step and the induction step are true, the property $P(n)$ is true for all integers $n \geq 0$.

That is, $\sum_{i=1}^{n+1} i \cdot 2^i = n \cdot 2^{n+2} + 2$ for all integers $n \geq 0$.

Chapter 5.2, Problem 15E

Problem

Prove the statements by mathematical induction.

Exercise

$\sum_{i=1}^{n} i(i!) = (n+1)! - 1$, for all integers $n \geq 1$.

Step-by-step solution

Step 1 of 4

Consider

$\sum_{i=1}^{n} i(i!) = (n+1)! - 1$, for all integers $n \geq 1$

Let the property $P(n)$ be the equation $\sum_{i=1}^{n} i(i!) = (n+1)! - 1$,

To show that $P(n)$ is true for all integers $n \geq 1$. Do this by using mathematical induction.

Remember that $n! = 1 \times 2 \times 3 \times \ldots\ldots \times (n-1) \times n$

Step 2 of 4

Show that $P(1)$ is true:

That is to show that $1(1!) = (1+1)! - 1 \quad P(1)$

The left hand side of the equation is $1(1!) = 1$ and right-hand side is

$(1+1)! - 1 = 2! - 1$

$= 2 - 1$

$= 1$

It follows that $1 = 1$

Hence $P(1)$ is true.

Step 3 of 4

Show that for all integers $n \geq 1$, $P(k)$ is true then $P(k+1)$ is also true:

Suppose $P(k)$ is true.

Then the inductive hypothesis is

$\sum_{i=1}^{k} i(i!) = (k+1)! - 1, \quad (k \geq 1)$

Now show that $P(k+1)$ is true.

That is to show that

$\sum_{i=1}^{k+1} i(i!) = ((k+1)+1)! - 1,$

Or, equivalently that

$\sum_{i=1}^{k+1} i(i!) = (k+2)! - 1,$

The left-hand side of $P(k+1)$ is

$\sum_{i=1}^{k+1} i(i!) = \sum_{i=1}^{k} i(i!) + (k+1)((k+1)!)$ Write into two terms

$= (k+1)! - 1 + (k+1)((k+1)!)$ By $P(k)$

$= (k+1)!\left[1 + (k+1)\right] - 1$ Taking common term $(k+1)!$

$= (k+1)!(k+2) - 1$ Simplify

$= (k+2)! - 1 \quad n! = n(n-1)!$

which is right hand side of $P(k+1)$

Step 4 of 4

Hence from the principle of mathematical induction,

$\sum_{i=1}^{n} i(i!) = (n+1)! - 1$, is true, for all integers $n \geq 1$

Chapter 5.2, Problem 16E

Problem

Prove the statements by mathematical induction.

Exercise

$\left(1-\frac{1}{2^2}\right)\left(1-\frac{1}{3^2}\right)\cdots\left(1-\frac{1}{n^2}\right)=\frac{n+1}{2n}$, for all integers $n \geq 2$.

Step-by-step solution

Step 1 of 3

Let $P(n)$ be the statement that

$$\left(1-\frac{1}{2^2}\right)\left(1-\frac{1}{3^2}\right)\left(1-\frac{1}{4^2}\right)\ldots\ldots\ldots\ldots\left(1-\frac{1}{n^2}\right)=\frac{n+1}{2n} \quad \text{for all integers } n \geq 2$$

Show that the property is true for $n = 2$

Then, $P(2)=1-\frac{1}{2^2}=\frac{3}{4}=\text{LHS}$

$\text{RHS}=\frac{2+1}{2.2}=\frac{3}{4}$

$\therefore \text{LHS}=\text{RHS}$, so the given statement is true for $n = 2$ ------- (1)

Step 2 of 3

Assume that $P(m)$ is true

i.e., $\left(1-\frac{1}{2^2}\right)\left(1-\frac{1}{3^2}\right)\left(1-\frac{1}{4^2}\right)\ldots\ldots\ldots\ldots\left(1-\frac{1}{m^2}\right)=\frac{m+1}{2m} \quad \rightarrow (2)$

Now, we can show that the property is true for $n = m + 1$

When $n=m+1$, we multiply the $m+1^{th}$ term on both sides while allowing the statement to stand for the product

i.e., $P(m+1)=$

$$\left\{\left(1-\frac{1}{2^2}\right)\left(1-\frac{1}{3^2}\right)\ldots\ldots\ldots\ldots\left(1-\frac{1}{m^2}\right)\right\}\left(1-\frac{1}{(m+1)^2}\right)=\left(\frac{m+1}{2m}\right)\left(1-\frac{1}{(m+1)^2}\right)$$

$$=\left(\frac{m+1}{2m}\right)\left(\frac{(m+1)^2-1}{(m+1)^2}\right)$$

$$=\frac{(m+1)\left(m^2+2m+1-1\right)}{(2m)(m+1)^2}$$

$$=\frac{m^2+2m}{2m(m+1)}$$

$$=\frac{m(m+2)}{m(2m+2)}$$

$$=\frac{(m+2)}{(2m+2)}$$

Step 3 of 3

$$=\frac{(m+1)+1}{2(m+1)}$$

This is the required form

So $P(m+1)$ is true ------ (3)

(1), (2), and (3) satisfy the hypothesis of mathematical induction

So by the result of mathematical induction, the given statement

$$\left(1-\frac{1}{2^2}\right)\left(1-\frac{1}{3^2}\right)\left(1-\frac{1}{4^2}\right)\ldots\ldots\ldots\ldots\left(1-\frac{1}{n^2}\right)=\frac{n+1}{2n} \quad \text{for all integers } n \geq 2 \text{ is true}$$

Chapter 5.2, Problem 18E

Problem

Prove each of the statement by mathematical induction.

$\prod_{i=2}^{n}\left(1-\frac{1}{i}\right)=\frac{1}{n}$ for every integer $n \geq 2$.

Hint: See the discussion at the beginning of this section.

Step-by-step solution

Step 1 of 3

Consider the following formula.

$\prod_{i=2}^{n}\left(1-\frac{1}{i}\right)=\frac{1}{n}$ for every integer $n \geq 2$.

The main objective of the problem is to prove that the above statement is true.

Step 2 of 3

Base case: $n=2$

Obtain $P(2)$ as follows.

$$\prod_{i=2}^{2}\left(1-\frac{1}{i}\right)=\frac{1}{2}$$

Simplify the LHS as follows.

$$\begin{aligned}\prod_{i=2}^{2}\left(1-\frac{1}{i}\right)&=\left(1-\frac{1}{2}\right)\\&=\frac{1}{2}\end{aligned}$$

Obtain the RHS as follows.

$$\frac{1}{2}$$

Observe that both the LHS and RHS are equal.

Thus, $\prod_{i=2}^{2}\left(1-\frac{1}{i}\right)=\frac{1}{2}$

Hence, $P(2)$ is true.

Step 3 of 3

Induction hypothesis:

For every integer $k \geq 2$, if $P(k)$ is true then $P(k+1)$ is true. That is if $\prod_{i=2}^{k}\left(1-\frac{1}{i}\right)=\frac{1}{k}$, then the following has to be shown: $\prod_{i=2}^{k+1}\left(1-\frac{1}{i}\right)=\frac{1}{k+1}$

Simplify the LHS as follows.

$$\begin{aligned}\prod_{i=2}^{k+1}\left(1-\frac{1}{i}\right)&=\left[\prod_{i=2}^{k}\left(1-\frac{1}{i}\right)\right]\left(1-\frac{1}{k+1}\right)\\&=\frac{1}{k}\left(1-\frac{1}{k+1}\right)\left[\because \prod_{i=2}^{k}\left(1-\frac{1}{i}\right)=\frac{1}{k}\right]\\&=\frac{1}{k}\left(\frac{k+1-1}{k+1}\right)\\&=\frac{1}{k}\left(\frac{k}{k+1}\right)\\&=\frac{1}{k+1}\\&=\text{RHS}\end{aligned}$$

Thus $P(k+1)$ is true whenever $P(k)$ is true.

Hence by the principle of mathematical induction the statement $\prod_{i=2}^{n}\left(1-\frac{1}{i}\right)=\frac{1}{n}$ is true for all $n \geq 2$.

Chapter 5.2, Problem 20E

Problem

Use the formula for the sum of the first *n* integers and/or the formula for the sum of a geometric sequence to evaluate the sums to write them in closed form.

Execise

4 + 8 + 12 + 16 + ... + 200

Step-by-step solution

Step 1 of 1

$$4+8+12+16+.....+200$$
$$=4(1+2+3+4+.....+50)$$
$$=4\frac{50(50+1)}{2} \text{ since } 1+2+3+4+.....+n=\frac{n(n+1)}{2}$$
$$=4\frac{50(51)}{2}$$
$$=4\left(\frac{2550}{2}\right)$$
$$=4(1275)$$
$$=5100$$

Chapter 5.2, Problem 21E

Problem

Use the formula for the sum of the first *n* integers and/or the formula for the sum of a geometric sequence to evaluate the sums to write them in closed form.

Execise

5 + 10 + 15 + 20 + … + 300

Step-by-step solution

Step 1 of 2

Consider a sequence $5+10+15+...+300$.

The objective is use the formula for the sum of the first *n* integers and to write the sequence in closed form.

Step 2 of 2

Rewrite the sequence $5+10+15+...+300$ as,

$5(1+2+3+...+60)$.

The sum of the sequence of the first *n* integers $1+2+3+...+n$ in closed form is, $\frac{n(n+1)}{2}$.

Apply the formula for the sum of the first *n* integers over $5(1+2+3+...+60)$ with $n=60$.

Therefore, the sum is,

$$\begin{aligned}5(1+2+3+...+60) &= 5\left(\frac{60(60+1)}{2}\right)\\ &= 5\left(\frac{60(61)}{2}\right)\\ &= 5\left(\frac{3660}{2}\right)\\ &= 5(1830)\end{aligned}$$

$=9150$

Hence, the sum of the sequence $5+10+15+...+300$ in closed form is $\boxed{9150}$.

Chapter 5.2, Problem 22E

Problem

Use the formula for the sum of the first *n* integers and/or the formula for the sum of a geometric sequence to evaluate the sum or to write them in closed form.

a. 3 + 4 + 5 + 6 + ... + 1000

---

b. 3 + 4 + 5 + 6 + ... + *m*

Step-by-step solution

Step 1 of 2

a.

Consider the following sum.

$$3+4+5+6+\cdots+1000$$

The objective is to write the above sum in closed form.

$$\begin{aligned}3+4+5+6+\cdots+1000 &= 1+2+3+4+5+6+\cdots+1000-(1+2)\\ &= \left(\frac{1000\times 1001}{2}\right)-3 \qquad \left[\because 1+2+\cdots+n=\frac{n(n+1)}{2}\right]\\ &= 500500-3\\ &= 500497\end{aligned}$$

Thus, the required sum is $500,497$.

Step 2 of 2

b.

Consider the following sum.

$$3+4+5+6+\cdots+m$$

The objective is to write the above sum in closed form.

$$\begin{aligned}3+4+5+6+\cdots+m &= 1+2+3+4+5+6+\cdots+m-(1+2)\\ &= \left(\frac{m(m+1)}{2}\right)-3 \qquad \left[\because 1+2+\cdots+n=\frac{n(n+1)}{2}\right]\\ &= \frac{m^2+m-6}{2}\end{aligned}$$

Thus, the required sum in closed form is $\frac{m^2+m-6}{2}$.

Chapter 5.2, Problem 23E

Problem

Use the formula for the sum of the first *n* integers and/or the formula for the sum of a geometric sequence to evaluate the sum or to write them in closed form.

a. 7 + 8 + 9 + 10 + ... + 600

---

b. 7 + 8 + 9 + 10 + ... + *k*

Step-by-step solution

Step 1 of 2

a.

Consider the following sum.

$$7+8+9+10+\cdots+600$$

The objective is to write the above sum in closed form.

$$\begin{aligned}7+8+9+10+\cdots+600 &= 1+2+\cdots+600-(1+2+3+4+5+6)\\ &= \left(\frac{600\times 601}{2}\right)-21 \qquad \left[\because 1+2+\cdots+n=\frac{n(n+1)}{2}\right]\\ &= 180300-21\\ &= 180279\end{aligned}$$

Thus, the required sum is $180,279$.

Step 2 of 2

b.

Consider the given sum.

$$7+8+9+10+\cdots+k$$

The objective is to write the above sum in closed form.

$$\begin{aligned}7+8+9+10+\cdots+k &= 1+2+\cdots+k-(1+2+3+4+5+6)\\ &= \left(\frac{k(k+1)}{2}\right)-21 \qquad \left[\because 1+2+\cdots+n=\frac{n(n+1)}{2}\right]\\ &= \frac{k^2+k-42}{2}\end{aligned}$$

Thus, the required sum in closed form is $\frac{k^2+k-42}{2}$.

Chapter 5.2, Problem 24E

Problem

Use the formula for the sum of the first *n* integers and/or the formula for the sum of a geometric sequence to evaluate the sums to write them in closed form.

Execise

1 + 2 + 3 +… + (*k* – 1), where *k* is an integer and *k* > 2.

Step-by-step solution

Step 1 of 1

Consider the series $1+2+3+\cdots+(k-1)$.

Here, $k \geq 2$ is an integer.

The objective is to find the sum of the first *n* integers.

The sum of the first *n* integers is $1+2+3+\cdots+n=\frac{n(n+1)}{2}$.

The *n*th term of the series $1+2+3+\cdots+(k-1)$ is $(k-1)$.

Thus, the sum of the given series is

$$\begin{aligned}1+2+3+\cdots+(k-1) &= \frac{(k-1)((k-1)+1)}{2} \\ &= \frac{(k-1)(k-1+1)}{2} \\ &= \frac{(k-1)k}{2}\end{aligned}$$

Thus, the sum of the series is $\boxed{\frac{k(k-1)}{2}}$.

Chapter 5.2, Problem 26E

Problem

Use the formula for the sum of the first *n* integers and/or the formula for the sum of a geometric sequence to evaluate the sums to write them in closed form.

Execise

3 + 32 + 33 + … + *3n*, where *n* is an integer with *n* ≥ 1

Step-by-step solution

Step 1 of 2

Consider the series as, $3+3^2+3^3+\cdots+3^n$.

Here, n is an integer such that $n \geq 1$.

The objective is to find the sum or write in closed form.

The series $3+3^2+3^3+\cdots+3^n$ is a geometric series.

Rewrite the series as follows:

$$3+3^2+3^3+\cdots+3^n = 3\left(1+3+3^2+3^3+\cdots+3^{n-1}\right).$$

Step 2 of 2

The formula for the sum of the geometric series is,

$$1+r+r^2+\cdots+r^n = \sum_{i=0}^{n} r^i = \frac{r^{n+1}-1}{r-1} \quad \text{..... (1)}$$

Here, r is any real number except 1 and the integer $n \geq 1$.

Here, the term $r=3$.

Thus, the sum of the series $3+3^2+3^3+\cdots+3^n$ is,

$$\begin{aligned} 3+3^2+3^3+\cdots+3^n &= 3\left(1+3+3^2+3^3+\cdots+3^{n-1}\right) \\ &= 3\cdot\frac{3^{(n-1)+1}-1}{3-1} && \text{Substituite } r=3 \text{ and } n=n-1 \text{ in } (1) \\ &= 3\cdot\frac{3^n-1}{2} && \text{Simplify} \\ &= \frac{3}{2}\left(3^n-1\right) \end{aligned}$$

Thus, the sum of the series is,

$$\boxed{\frac{3}{2}\left(3^n-1\right) \text{ or } \frac{3^{n+1}-3}{2}}.$$

Chapter 5.2, Problem 27E

Problem

Use the formula for the sum of the first *n* integers and/or the formula for the sum of a geometric sequence to evaluate the sums to write them in closed form.

Execise

53 + 54 + 55 + …+ 5*k*, where *k* is any integer with *k* ≥ 3.

Step-by-step solution

Step 1 of 3

Consider the series $5^3+5^4+5^5+\cdots+5^k$.

Here, k is an integer with $k\geq 3$.

The objective is to find the sum of the above series.

The series $5^3+5^4+5^5+\cdots+5^k$ is a geometric series.

Rewrite the above series as follows:

$$5^3+5^4+5^5+\cdots+5^k=5^3\left(1+5+5^2+5^3+\cdots+5^{k-3}\right).$$

Step 2 of 3

Consider the geometric series as,

$$1+r+r^2+r^3+\cdots+r^n.$$

Here, r is any real number except 1 and the integer $n\geq 1$.

The formula for the sum of a geometric series is,

$$\sum_{i=0}^{n} r^i=\frac{r^{n+1}-1}{r-1}.$$

Step 3 of 3

Now, consider the geometric series as,

$$1+5+5^2+5^3+\cdots+5^{k-3}$$

Apply the formula for the sum of a geometric series to the above geometric series with $r=5$.

Thus, the sum of the series $5^3+5^4+5^5+\cdots+5^k$ is,

$$\begin{aligned}5^3+5^4+5^5+\cdots+5^k&=5^3\left(1+5+5^2+5^3+\cdots+5^{k-3}\right)\\&=5^3\cdot\frac{5^{(k-3)+1}-1}{5-1} && \text{Substituite } r=5\\&=5^3\cdot\frac{5^{k-2}-1}{4} && \text{Simplify}\\&=\frac{125}{4}\left(5^{k-2}-1\right)\end{aligned}$$

Thus, the required sum of the series is, $\boxed{\frac{125}{4}\left(5^{k-2}-1\right)}$.

Chapter 5.2, Problem 29E

Problem

Use the formula for the sum of the first *n* integers and/or the formula for the sum of a geometric sequence to evaluate the sums to write them in closed form.

Execise

1 –2 + 22 –23 + … + (–1)*n*2*n*, where *n* is a positive integer

Step-by-step solution

Step 1 of 1

Consider the series $1-2+2^2-2^3+\cdots+(-1)^n 2^n$.

Here, *n* is a positive integer.

The objective is to find the sum of the geometric series.

The sum of the geometric series is $\sum_{i=0}^{n} r^i = \frac{r^{n+1}-1}{r-1}$, where *r* is any real number except 1 and the integer $n \geq 1$.

Here, the term $r=-2$.

Thus, the sum of the series $1-2+2^2-2^3+\cdots+(-1)^n 2^n$ is,

$$\begin{aligned} 1-2+2^2-2^3+\cdots+(-1)^n 2^n &= \frac{(-2)^{n+1}-1}{-2-1} && \text{Substituite } r=-2 \\ &= \frac{(-2)^{n+1}-1}{-3} && \text{Simplify} \\ &= \frac{1-(-2)^{n+1}}{3} \end{aligned}$$

Thus, the sum of the series is $\boxed{\frac{1-(-2)^{n+1}}{3}}$.

Chapter 5.2, Problem 30E

Problem

Observe that

$$\frac{1}{1\cdot 3}=\frac{1}{3}$$
$$\frac{1}{1\cdot 3}+\frac{1}{3\cdot 5}=\frac{2}{5}$$
$$\frac{1}{1\cdot 3}+\frac{1}{3\cdot 5}+\frac{1}{5\cdot 7}=\frac{3}{7}$$
$$\frac{1}{1\cdot 3}+\frac{1}{3\cdot 5}+\frac{1}{5\cdot 7}+\frac{1}{7\cdot 9}=\frac{4}{9}.$$

Guess a general formula and prove it by mathematical induction.

Step-by-step solution

Step 1 of 4

Consider the following sums.

$$\frac{1}{1\cdot 3}=\frac{1}{3}=\frac{1}{2\cdot 1+1}$$
$$\frac{1}{1\cdot 3}+\frac{1}{3\cdot 5}=\frac{2}{5}=\frac{2}{2\cdot 2+1}$$
$$\frac{1}{1\cdot 3}+\frac{1}{3\cdot 5}+\frac{1}{5\cdot 7}=\frac{3}{7}=\frac{3}{2\cdot 3+1}$$
$$\frac{1}{1\cdot 3}+\frac{1}{3\cdot 5}+\frac{1}{5\cdot 7}+\frac{1}{7\cdot 9}=\frac{4}{9}=\frac{4}{2\cdot 4+1}$$
$$\vdots$$
$$\frac{1}{1\cdot 3}+\frac{1}{3\cdot 5}+\frac{1}{5\cdot 7}+\frac{1}{7\cdot 9}+\cdots+\frac{1}{(2n-1)(2n+1)}=\frac{n}{2n+1}$$

Let the general formula be as follows.

For every integer $n\geq 1$, $\frac{1}{1\cdot 3}+\frac{1}{3\cdot 5}+\frac{1}{5\cdot 7}+\frac{1}{7\cdot 9}+\cdots+\frac{1}{(2n-1)(2n+1)}=\frac{n}{2n+1}$.

Step 2 of 4

Proof:

Let the property $P(n)$ be the equation .

$$P(n):\ \frac{1}{1\cdot 3}+\frac{1}{3\cdot 5}+\frac{1}{5\cdot 7}+\frac{1}{7\cdot 9}+\cdots+\frac{1}{(2n-1)(2n+1)}=\frac{n}{2n+1}$$

Base case:

The LHS of $P(1)$ is $\frac{1}{1\cdot 3}=\frac{1}{3}$.

The RHS of $P(1)$ is $\frac{1}{2\cdot 1+1}=\frac{1}{2+1}=\frac{1}{3}$.

Observe that LHS and RHS are the same. Thus, $P(1)$ is true.

Step 3 of 4

Inductive hypothesis:

Let $P(k)$ is true. That is $P(k):\ \frac{1}{1\cdot 3}+\frac{1}{3\cdot 5}+\frac{1}{5\cdot 7}+\frac{1}{7\cdot 9}+\cdots+\frac{1}{(2k-1)(2k+1)}=\frac{k}{2k+1}$ is true.

Prove that $P(k+1)$ is true.

That is prove that $P(k+1):\ \frac{1}{1\cdot 3}+\frac{1}{3\cdot 5}+\frac{1}{5\cdot 7}+\frac{1}{7\cdot 9}+\cdots+\frac{1}{(2k+1)(2k+3)}=\frac{k+1}{2(k+1)+1}$ is true.

Step 4 of 4

Consider the LHS of $P(k+1)$.

$$\begin{aligned}
&\frac{1}{1\cdot 3}+\frac{1}{3\cdot 5}+\frac{1}{5\cdot 7}+\frac{1}{7\cdot 9}+\cdots+\frac{1}{(2k-1)(2k+1)}+\frac{1}{(2k+1)(2k+3)}\\
&=\left\{\frac{1}{1\cdot 3}+\frac{1}{3\cdot 5}+\frac{1}{5\cdot 7}+\frac{1}{7\cdot 9}+\cdots+\frac{1}{(2k-1)(2k+1)}\right\}+\frac{1}{(2k+1)(2k+3)}\\
&=\frac{k}{2k+1}+\frac{1}{(2k+1)(2k+3)}\left[\because \text{Inductive hypothesis}\right]\\
&=\frac{k(2k+3)+1}{(2k+1)(2k+3)}\\
&=\frac{2k^2+3k+1}{(2k+1)(2k+3)}\\
&=\frac{(2k+1)(k+1)}{(2k+1)(2k+3)}\\
&=\frac{(k+1)}{(2k+3)}\\
&=\frac{(k+1)}{(2(k+1)+1)}\\
&=\text{RHS}
\end{aligned}$$

Thus by the principle of mathematical induction

$$P(n):\frac{1}{1\cdot 3}+\frac{1}{3\cdot 5}+\cdots+\frac{1}{(2n-1)(2n+1)}=\frac{n}{2n+1},\forall n\in\square.$$

Chapter 5.2, Problem 31E

Problem

Compute values of the product

$$\left(1+\frac{1}{1}\right)\left(1+\frac{1}{2}\right)\left(1+\frac{1}{3}\right)\cdots\left(1+\frac{1}{n}\right)$$

for small values of n in order to conjecture a general formula for the product. Prove your conjecture by mathematical induction.

Step-by-step solution

Step 1 of 4

Consider the given product.

$$\left(1+\frac{1}{1}\right)\left(1+\frac{1}{2}\right)\left(1+\frac{1}{3}\right)\cdots\left(1+\frac{1}{n}\right)$$

Let the general formula be as follows.

$$\begin{aligned}\left(1+\frac{1}{1}\right)\left(1+\frac{1}{2}\right)\left(1+\frac{1}{3}\right)\cdots\left(1+\frac{1}{n}\right)&=(2)\left(\frac{3}{2}\right)\left(\frac{4}{3}\right)\cdots\left(\frac{n+1}{n}\right)\\&=n+1\end{aligned}$$

Step 2 of 4

Proof:

$$P(n):\left(1+\frac{1}{1}\right)\left(1+\frac{1}{2}\right)\left(1+\frac{1}{3}\right)\cdots\left(1+\frac{1}{n}\right)=n+1$$

Base case:

LHS of $P(1)$ is $1+\frac{1}{1}=1+1=2$.

RHS of $P(1)$ is $1+1=2$.

Observe that LHS and RHS are the same.

Thus, $P(1)$ is true.

Step 3 of 4

Inductive hypothesis:

Let $P(k)$ is true. That is $P(k)$: $\left(1+\frac{1}{1}\right)\left(1+\frac{1}{2}\right)\left(1+\frac{1}{3}\right)\cdots\left(1+\frac{1}{n}\right)=k+1$ is true.

Prove that $P(k+1)$ is true.

That is prove that $P(k+1)$: $\left(1+\frac{1}{1}\right)\left(1+\frac{1}{2}\right)\left(1+\frac{1}{3}\right)\cdots\left(1+\frac{1}{k+1}\right)=k+2$ is true.

Step 4 of 4

Consider the LHS of $P(k+1)$.

$$\begin{aligned}&\left(1+\frac{1}{1}\right)\left(1+\frac{1}{2}\right)\left(1+\frac{1}{3}\right)\cdots\left(1+\frac{1}{k}\right)\left(1+\frac{1}{k+1}\right)\\&=\left\{\left(1+\frac{1}{1}\right)\left(1+\frac{1}{2}\right)\left(1+\frac{1}{3}\right)\cdots\left(1+\frac{1}{k}\right)\right\}\left(1+\frac{1}{k+1}\right)\\&=(k+1)\left(1+\frac{1}{k+1}\right)[\because \text{By inductive hypothesis}]\\&=(k+1)\left(\frac{k+2}{k+1}\right)\\&=k+2\\&=\text{RHS}\end{aligned}$$

Thus by the principle of mathematical induction

$$P(n):\left(1+\frac{1}{1}\right)\left(1+\frac{1}{2}\right)\left(1+\frac{1}{3}\right)\cdots\left(1+\frac{1}{n}\right)=n+1,\forall n\geq 1.$$

Chapter 5.2, Problem 32E

Problem

Observe that

$$\begin{aligned} 1 &= 1 \\ 1-4 &= -(1+2) \\ 1-4+9 &= 1+2+3 \\ 1-4+9-16 &= -(1+2+3+4) \\ 1-4+9-16+25 &= 1+2+3+4+5. \end{aligned}$$

Guess a general formula and prove it by mathematical induction.

Step-by-step solution

Step 1 of 4

Consider the given pattern.

$$\begin{aligned} 1 &= 1 \\ 1-4 &= -(1+2) \\ 1-4+9 &= 1+2+3 \\ 1-4+9-16 &= -(1+2+3+4) \\ 1-4+9-16+25 &= 1+2+3+4+5 \end{aligned}$$

Let the general formula be as follows.

$$1-4+9-16+25-\cdots n^2 = (-1)^{n-1}[1+2+3+\cdots+n]$$

$$\sum_{i=1}^{n}(-1)^{i-1}i^2 = (-1)^{n-1}\left(\frac{n(n+1)}{2}\right)$$

Step 2 of 4

Proof:

$$P(n):\ \sum_{i=1}^{n}(-1)^{i-1}i^2 = (-1)^{n-1}\left(\frac{n(n+1)}{2}\right)$$

Base case:

LHS of $P(1)$ is $(-1)^{1-1}1^2 = 1$.

RHS of $P(1)$ is $(-1)^{1-1}\left(\frac{1(1+1)}{2}\right) = 1\left(\frac{2}{2}\right) = 1$.

Observe that LHS and RHS are the same.

Thus, $P(1)$ is true.

Step 3 of 4

Inductive hypothesis:

Let $P(k)$ is true. That is $P(k):\ \sum_{i=1}^{k}(-1)^{i-1}i^2 = (-1)^{k-1}\left(\frac{k(k+1)}{2}\right)$ is true.

Show that $P(k+1):\ \sum_{i=1}^{k+1}(-1)^{i-1}i^2 = (-1)^{k}\left(\frac{(k+1)(k+2)}{2}\right)$ is true.

Step 4 of 4

Consider the LHS of $P(k+1)$.

$$\begin{aligned} \sum_{i=1}^{k+1}(-1)^{i-1}i^2 &= \sum_{i=1}^{k}(-1)^{i-1}i^2 + (-1)^{k+1-1}(k+1)^2 \\ &= (-1)^{k-1}\left(\frac{k(k+1)}{2}\right) + (-1)^{k}(k+1)^2 \quad [\because \text{Inductive hypothesis}] \\ &= (-1)^{k-1}(k+1)\left[\frac{k}{2} + (-1)(k+1)\right] \\ &= (-1)^{k-1}(k+1)\left[\frac{k}{2} - k - 1\right] \\ &= (-1)^{k-1}(k+1)\left[\frac{k-2k-2}{2}\right] \\ &= (-1)^{k-1}(k+1)\left[\frac{-k-2}{2}\right] \\ &= (-1)^{k}(k+1)\left[\frac{k+2}{2}\right] \\ &= (-1)^{k}\frac{(k+1)(k+2)}{2} \\ &= \text{RHS} \end{aligned}$$

Thus by the principle of mathematical induction method

$$\sum_{i=1}^{n}(-1)^{i-1}i^2 = (-1)^{n-1}\left(\frac{n(n+1)}{2}\right), \forall n \geq 1.$$

Chapter 5.2, Problem 33E

Problem

Find a formula in *n, a, m,* and *d* for the sum *(a + md)* + *(a + (m* + 1)d) + *(a + (m* + 2)d) +… + *(a + (m + n)d),* where *m* and *n* are integers, *n* ≥ 0, and *a* and *d* are real numbers. Justify your answer.

Step-by-step solution

Step 1 of 3

Consider the series $(a+md)+(a+(m+1)d)+(a+(m+2)d)+\cdots+(a+(m+n)d)$.

Here, *a*, *d* are the real numbers, *n*, *m* are the integers and $n \geq 0$.

The objective is to find the sum of the series in terms of *a*, *m*, *n*, and *d*.

Step 2 of 3

For this first note that the sum of the first n natural number is,

$$1+2+3+\cdots+n=\frac{n(n+1)}{2}$$

Now rewrite the series as follows:

$$\begin{aligned}\left\{\begin{matrix}(a+md)+(a+(m+1)d)+\\(a+(m+2)d)+\cdots+(a+(m+n)d)\end{matrix}\right\}&=\left\{\begin{matrix}(a+a+\cdots+a(n+1\text{ times}))\\+(md+(m+1)d+\cdots+(m+n)d)\end{matrix}\right\}\\&=\left\{\begin{matrix}(a+a+\cdots+a(n+1\text{ times}))+\\d(m+(m+1)+\cdots+(m+n))\end{matrix}\right\}\end{aligned}$$

Step 3 of 3

Thus, the sum of the above series is,

$$\begin{aligned}\left\{\begin{matrix}(a+md)+(a+(m+1)d)+\\(a+(m+2)d)+\cdots+(a+(m+n)d)\end{matrix}\right\}&=\left\{\begin{matrix}\left(\underbrace{a+a+\cdots+a}_{n+1\text{ times}}\right)+\\d(m+(m+1)+\cdots+(m+n))\end{matrix}\right\}\\&=\left\{(n+1)a+(n+1)md+d\frac{(n(n+1))}{2}\right\}\\&=(n+1)\left[a+md+\frac{dn}{2}\right]\end{aligned}$$

Hence, the sum of the series in terms of *a*, *m*, *n*, and *d* is $\boxed{(n+1)\left[a+md+\frac{dn}{2}\right]}$.

Chapter 5.2, Problem 34E

Problem

Find a formula in *a, r, m,* and *n* for the sum

arm + arm+1 + arm+2 + … + arm+

where *m* and *n* are integers, *n* ≥ 0, and *a* and *r* are real numbers. Justify your answer.

Step-by-step solution

Step 1 of 1

Consider the formula for m and n are integers with $n \geq 0$ and a and r are real numbers.

$$ar^m + ar^{m+1} + ar^{m+2} + \cdots + ar^{m+n}$$

Objective is to find a formula for the sum.

$$ar^m + ar^{m+1} + ar^{m+2} + \cdots + ar^{m+n} = a\left(r^m + r^{m+1} + r^{m+2} + \cdots + r^{m+n}\right)$$

Take a as common

$$= a\left(r^m + r^m r^1 + r^m r^2 + \cdots + r^m r^n\right)$$

$$\left[\text{Use } x^{a+b} = x^a x^b\right]$$

$$= ar^m\left(1 + r + r^2 + \cdots + r^n\right)$$

Take r^m as common.

$$= ar^m\left(\frac{r^{n+1} - 1}{r - 1}\right)$$

Therefore, the formula for sum is $\boxed{ar^m\left(\frac{r^{n+1} - 1}{r - 1}\right)}$.

Chapter 5.2, Problem 35E

Problem

You have two parents, four grandparents, eight great-grandparents, and so forth.

a. If all your ancestors were distinct, what would be the total number of your ancestors for the past 40 generations (counting your parents' generation as number one)? *(Hint:* Use the formula for the sum of a geometric sequence.)

b. Assuming that each generation represents 25 years, how long is 40 generations?

c. The total number of people who have ever lived is approximately 10 billion, which equals 1010 people. Compare this fact with the answer to part (a). What do you deduce?

Step-by-step solution

Step 1 of 4

Consider the problem in which a person has two parents, four grandparents, eight great grandparents, and so on.

Step 2 of 4

(a)

Objective is to determine the total number of ancestors for the past 40 years.

Consider the sequence of ancestors for the past 40 years $2^1, 2^2, 2^3, \ldots, 2^{40}$

Now, in order to find the total number of ancestors in 40 generations compare this sequence of ancestors with the geometric sequence $a, ar, ar^2, \ldots, ar^n$ whose sum is, $a\left(\frac{r^n-1}{r-1}\right)$. Here a denotes the first term and r denotes the common ratio.

For the sequence, $2^1, 2^2, 2^3, \ldots, 2^{40}$, the number of distinct ancestors for the past 40 generations is:

$$\begin{aligned} 2+2^2+2^3+\cdots+2^{40} &= 2\left(1+2+2^2+\cdots+2^{39}\right) \\ &= 2\left[\frac{2^{40}-1}{2-1}\right] \\ &= 2\left(2^{40}-1\right) \\ &= 2^{41}-2 \end{aligned}$$

That is,

$$\begin{aligned} 2+2^2+2^3+\cdots+2^{40} &= 2^{41}-2 \\ &= 2{,}199{,}023{,}255{,}550 \end{aligned}$$

Hence, total number of ancestors in 40 generations is $\boxed{2{,}199{,}023{,}255{,}550}$ **.**

Step 3 of 4

(b)

Next assume that each generation represents 25 years then objective is to find the duration of 40 generations.

Since each generation has duration 25 years, the series represents an arithmetic sequence with first term $a=0$ and common difference $d=25$.

Thus, the length of 40 generations is,

$$\begin{aligned} a+40d &= 0+40(25) \\ &= 1000 \end{aligned}$$

Hence, the duration of 40 generations is $\boxed{\text{1000 years}}$.

Step 4 of 4

(c)

Consider that the total number of people lived is approximately 10^{10} people. Objective is to compare this fact with part (a),

$$2+2^2+2^3+\cdots+2^{40} = 2^{41}-2$$

Also,

$$10^{10} < 2^{41}-2$$

From this it can be concluded that, the ancestors cannot be distinct.

Chapter 5.2, Problem 36E

Problem

Find the mistakes in the proof fragments,

Exercise

Theorem: For any integer $n \geq 1$,

$$1^2 + 2^2 + \cdots + n^2 = \frac{n(n+1)(2n+1)}{6}.$$

"Proof (by mathematical induction): Certainly the theorem is true for $n = 1$ because 12 = 1 and $\frac{1(1+1)(2\cdot 1+1)}{6} = 1$. So the basis step is true.

For the inductive step, suppose that for some integer $k \geq 1$,

$k^2 = \frac{k(k+1)(2k+1)}{6}$. We must show that

$(k+1)^2 = \frac{(k+1)((k+1)+1)(2(k+1)+1)}{6}$."

Step-by-step solution

Step 1 of 1

Consider that the sum of the squares of the first n natural numbers is

$1^2 + 2^2 + \cdots + n^2 = \frac{n(n+1)(2n+1)}{6}$, for any integer $n \geq 1$.

The given inductive step is $k^2 = \frac{k(k+1)(2k+1)}{6}$ is wrong.

The statement should be $1^2 + 2^2 + 3^2 + \ldots\ldots + k^2 = \frac{k(k+1)(2k+1)}{6}$.

To prove the result is true for $n = k+1$, we have to prove that

$$1^2 + 2^2 + 3^2 + \ldots\ldots\ldots + k^2 + (k+1)^2 = \frac{(k+1)\{(k+1)+1\}\{2(k+1)+1\}}{6}.$$

But the given statement is $(k+1)^2 = \frac{(k+1)\{(k+1)+1\}\{2(k+1)+1\}}{6}$, which is also wrong.

Hence, the correct statement is,

$$1^2 + 2^2 + 3^2 + \ldots\ldots\ldots + k^2 + (k+1)^2 = \frac{(k+1)\{(k+1)+1\}\{2(k+1)+1\}}{6}.$$

Chapter 5.2, Problem 37E

Problem

Find the mistakes in the proof fragments,

Exercise

Theorem: For any integer $n > 0$,

1 + 2 + 22 + … + 2n = 2n +1 –1.

"Proof (by mathematical induction): Let the property

P(n) be 1 + 2 + 22 +…+ 2n = 2n +1 –1.

Show that P(0) is true:

The left-hand side of *P (0)* is 1 + 2 + 22 + … + 20 = 1 and the right-hand side is20+1 –1 = 2 –1 = 1 also. So *P* (0) is true."

Step-by-step solution

Step 1 of 2

Consider that property that, $1+2+2^2+\cdots+2^n=2^{n+1}-1$, for any integer $n \geq 0$ and the proof of this property provided in the text book. The objective is to find the mistake in the proof.

Step 2 of 2

Consider, $P(n)=1+2+2^2+\cdots+2^n=2^{n+1}-1$

The mistakes in the proof is in showing that $P(0)$is true. Because in the left-hand side of $P(0)$is 1 but in the proof, it is written that $P(0)=1+2+2^2+\cdots+2^0$ and this is not equal to 1.

Hence, the mistake is in $P(0)$ **.**

Chapter 5.2, Problem 38E

Problem

Find the mistakes in the proof fragments,

Exercise

Theorem: For any integer $n \geq 1$,

$$\sum_{i=1}^{n} i(i!) = (n+1)! - 1.$$

"Proof (by mathematical induction): Let the property

$P(n)$ be $\sum_{i=1}^{n} i(i!) = (n+1)! - 1.$

Show that P(1) is true: When $n = 1$

$$\sum_{i=1}^{1} i(i!) = (1+1)! - 1$$

So $1(1!) = 2! - 1$

and $1 = 1$

Thus $P(1)$ is true."

Step-by-step solution

Step 1 of 5

Consider the series $\sum_{i=1}^{n} i(i!) = (n+1)! - 1$, for any integer $n \geq 1$.

The objective is to verify the proof given in the question.

Step 2 of 5

Consider the property $P(n)$ with the equation such that $P(n)$ be $\sum_{i=1}^{n} i(i!) = (n+1)! - 1$.

To Show $P(1)$ is true:

$$\begin{aligned}\sum_{i=1}^{1} i(i!) &= (1+1)! - 1\\ 1(1!) &= 2! - 1\\ 1 &= 1\end{aligned}$$

Step 3 of 5

The proof given above to show that $P(1)$ is true is wrong because starting from a given statement and then deducing a true conclusion does not always verify the statement. And one has to prove the left-hand side (LHS) and the right-hand side (RHS) separately.

Step 4 of 5

A proof must be verified by following two ways given below:

1. Transform the Left-hand side and Right-hand side separately until they both are equal.

2. Transform one side of the equation until it appears to be same as the other sides of the equation.

Step 5 of 5

Here, in the proof, considering $\sum_{i=1}^{1} i(i!) = (1+1)! - 1$ is wrong.

Therefore, to provide the correct proof, prove LHS and RHS separately as given below:

$$\begin{aligned}\text{LHS} &= \sum_{i=1}^{1} i(i!)\\ &= 1(1!)\\ &= 1\\ \text{RHS} &= (1+1)! - 1\\ &= 2! - 1\\ &= 2 - 1\\ &= 1\end{aligned}$$

This implies, $\text{LHS} = \text{RHS}$.

Hence, $P(1)$ is true.

Chapter 5.2, Problem 39E

Problem

Use Theorem to prove that if *m* and *n* are any positive integers and *m* is odd, then $\sum_{k=0}^{m-1}(n+k)$ is divisible by m. Does the conclusion hold if *m* is even? Justify your answer.

Theorem 1

Sum of the First n Integers

For all integers $n \geq 1$,

$$1+2+\cdots+n=\frac{n(n+1)}{2}.$$

Proof (by mathematical induction):

Let the property $P(n)$ be the equation

$$1+2+3+\cdots+n=\frac{n(n+1)}{2}. \qquad \leftarrow P(n)$$

Show that P(1) is true:

To establish $P(1)$, we must show that

$$1=\frac{1(1+1)}{2} \qquad \leftarrow P(1)$$

But the left-hand side of this equation is 1 and the right-hand side is

$$\frac{1(1+1)}{2}=\frac{2}{2}=1$$

also. Hence $P(1)$ is true.

Show that for all integers k≥ 1, if P(k) is true then P(k + 1) is also true:

[Suppose that $P(k)$ is true for a particular but arbitrarily chosen integer $k \geq 1$.

That is:] Suppose that k is any integer with $k \geq 1$ such that

$$1+2+3+\cdots+k=\frac{k(k+1)}{2} \qquad \leftarrow P(k) \text{ inductive hypothesis}$$

[We must show that $P(k + 1)$ is true. That is:] We must show that

$$1+2+3+\cdots+(k+1)=\frac{(k+1)[(k+1)+1]}{2},$$

or, equivalently, that

$$1+2+3+\cdots+(k+1)=\frac{(k+1)(k+2)}{2}. \qquad \leftarrow P(k+1)$$

[We will show that the left-hand side and the right-hand side of P(k + 1) are equal to the same quantity and thus are equal to each other.]

The left-hand side of $P(k + 1)$ is

$$\begin{aligned}
&1+2+3+\cdots+(k+1) \\
&\quad =1+2+3+\cdots+k+(k+1) && \text{by making the next-to-last term explicit} \\
&\quad =\frac{k(k+1)}{2}+(k+1) && \text{by substitution from the inductive hypothesis} \\
&\quad =\frac{k(k+1)}{2}+\frac{2(k+1)}{2} \\
&\quad =\frac{k^2+k}{2}+\frac{2k+2}{2} \\
&\quad =\frac{k^2+3k+1}{2} && \text{by algebra.}
\end{aligned}$$

And the right-hand side of $P(k + 1)$ is

$$\frac{(k+1)(k+2)}{2}=\frac{k^2+3k+1}{2}.$$

Thus the two sides of $P(k + 1)$ are equal to the same quantity and so they are equal to each other. Therefore the equation $P(k + 1)$ is true [*as was to be shown*].

[Since we have proved both the basis step and the inductive step, we conclude that the theorem is true.]

Step-by-step solution

Step 1 of 5

The objective is to prove that $\sum_{k=0}^{m-1}(n+k)$ is divisible by *m*, where *m* and *n* are any positive integers and *m* is odd.

Theorem 5.2.2: For all integers $n \geq 1$, the sum of the first *n* integers is given by

$$1+2+\ldots+n=\frac{n(n+1)}{2} \quad \ldots\ldots(1)$$

Step 2 of 5

Consider $\sum_{k=0}^{m-1}(n+k)$.

$$\begin{aligned}
\sum_{k=0}^{m-1}(n+k) &= (n)+(n+1)+(n+2)+\ldots+(n+m-1) \\
&= (n+n+n+\ldots m \text{ times})+(1+2+\ldots+(m-1))
\end{aligned}$$

Step 3 of 5

Now,

$$n+n+n+\ldots m \text{ times}=mn$$

and

$$\begin{aligned}
1+2+\ldots+(m-1) &= \frac{(m-1)(m-1+1)}{2} \qquad \text{from (1)} \\
&= \frac{(m-1)m}{2}
\end{aligned}$$

Step 4 of 5

Therefore,

$$\sum_{k=0}^{m-1}(n+k)=mn+\frac{(m-1)m}{2}$$

The first term of the summation is *mn* which is divisible by *m*, as dividing *mn* by *m* gives *n* which is an integer.

The second term of the summation is $\frac{(m-1)m}{2}$. Dividing $\frac{(m-1)m}{2}$ by *m* gives $\frac{(m-1)}{2}$.

When *m* is odd, $(m-1)$ is even and hence $\frac{(m-1)}{2}$ is an integer. Therefore, when *m* is odd, $\frac{(m-1)m}{2}$ is divisible by *m*.

Hence, when *m* is odd, $\sum_{k=0}^{m-1}(n+k)$ is divisible by *m*, where *m* and *n* are any positive integers.

Step 5 of 5

Consider the second term of the summation again. Dividing $\frac{(m-1)m}{2}$ by *m* gives $\frac{(m-1)}{2}$.

When *m* is even, $(m-1)$ is odd and hence $\frac{(m-1)}{2}$ is not an integer. Therefore, when *m* is even, $\frac{(m-1)m}{2}$ is not divisible by *m*. The first term of the summation *mn* is divisible by *m* irrespective of the value of *m*.

Since the first term of the summation is divisible by *m* and the second term of the summation is not divisible of *m* when *m* is even, $\sum_{k=0}^{m-1}(n+k)$ is not divisible by *m* when *m* is even.

Chapter 5.2, Problem 40E

Problem

Use Theorem and the result of exercise 10 to prove that if p is any prime number with $p \geq 5$, then the sum of squares of any p consecutive integers is divisible by p.

Theorem 1

Sum of the First n Integers

For all integers $n \geq 1$,

$$1 + 2 + \cdots + n = \frac{n(n+1)}{2}.$$

Proof (by mathematical induction):

Let the property $P(n)$ be the equation

$$1 + 2 + 3 + \cdots + n = \frac{n(n+1)}{2}. \qquad \leftarrow P(n)$$

Show that P(1) is true:

To establish $P(1)$, we must show that

$$1 = \frac{1(1+1)}{2} \qquad \leftarrow P(1)$$

But the left-hand side of this equation is 1 and the right-hand side is

$$\frac{1(1+1)}{2} = \frac{2}{2} = 1$$

also. Hence $P(1)$ is true.

Show that for all integers k≥ 1, if P(k) is true then P(k + 1) is also true:

[Suppose that $P(k)$ is true for a particular but arbitrarily chosen integer $k \geq 1$.

That is:] Suppose that k is any integer with $k \geq 1$ such that

$$1 + 2 + 3 + \cdots + k = \frac{k(k+1)}{2} \qquad \leftarrow P(k) \text{ inductive hypothesis}$$

[We must show that $P(k + 1)$ is true. That is:] We must show that

$$1 + 2 + 3 + \cdots + (k+1) = \frac{(k+1)[(k+1)+1]}{2},$$

or, equivalently, that

$$1 + 2 + 3 + \cdots + (k+1) = \frac{(k+1)(k+2)}{2}. \qquad \leftarrow P(k+1)$$

[We will show that the left-hand side and the right-hand side of P(k + 1) are equal to the same quantity and thus are equal to each other.]

The left-hand side of $P(k + 1)$ is

$$\begin{aligned}
&1 + 2 + 3 + \cdots + (k+1) \\
&\quad = 1 + 2 + 3 + \cdots + k + (k+1) && \text{by making the next-to-last term explicit} \\
&\quad = \frac{k(k+1)}{2} + (k+1) && \text{by substitution from the inductive hypothesis} \\
&\quad = \frac{k(k+1)}{2} + \frac{2(k+1)}{2} \\
&\quad = \frac{k^2+k}{2} + \frac{2k+2}{2} \\
&\quad = \frac{k^2+3k+1}{2} && \text{by algebra.}
\end{aligned}$$

And the right-hand side of $P(k + 1)$ is

$$\frac{(k+1)(k+2)}{2} = \frac{k^2+3k+1}{2}.$$

Thus the two sides of $P(k + 1)$ are equal to the same quantity and so they are equal to each other. Therefore the equation $P(k + 1)$ is true [*as was to be shown*].

[Since we have proved both the basis step and the inductive step, we conclude that the theorem is true.]

Step-by-step solution

Step 1 of 1

If $p \geq 5$ and a prime, then the sum of the squares of p consecutive integers is divisible by p

Suppose that $m+1,\ m+2,\ m+3, \ldots\ldots\ldots\ldots m+p$ are p consecutive integers

Sum of the squares $= (m+1)^2 + (m+2)^2 + \ldots\ldots\ldots\ldots (m+p)^2 \qquad \to (1)$

$$= \left\{1^2 + 2^2 + \ldots\ldots\ldots + (m+p)^2\right\} - \left\{1^2 + 2^2 + \ldots\ldots\ldots m^2\right\}$$

$$= \frac{(m+p)(m+p+1)\{2m+2p+1\}}{6} - \frac{m(m+1)(2m+1)}{6}$$

$$= \frac{(m+p)(m+p+1)(2(m+p)+1) - m(m+1)(2m+1)}{6}$$

$$= \frac{\left\{\begin{array}{l} m(m+1)(2m+1) + p(m+1)(2m+1) + m(p)(2m+1) \\ +m(m+1)(2p) + m(p)(2p) + p(p)(2m+1) + \\ p(2p) + p(m+1)(2p) \end{array}\right\} - m(m+1)(2m+1)}{6}$$

$$= \frac{\begin{array}{l} p(m+1)(2m+1) + mp(2m+1) + 2mp(m+1) + 2p^2m + \\ p^2(2m+1) + 2p^3 + 2p^2(m+1) \end{array}}{6} \qquad \to (*)$$

$$= \frac{p\{(m+1)(2m+1)m(2m+1) + 2m(m+1) + 2mp + p(2m+1) + 2p^2\}}{6}$$

Clearly (*) is an integer, and since p is not divisible by 6, we say that

$= \dfrac{(m+1)(2m+1)m(2m+1) + 2m(m+1) + 2mp + p(2m+1) + 2p^2}{6}$ is an integer 1

$\therefore (1)$ is a multiple of p

Thus, the sum of the squares of any p consecutive integers is divisible by p

Chapter 5.3, Problem 1E

Problem

Use mathematical induction (and the proof of proposition 5.3.1 as a model) to show that any amount of money of at least 14¢ can be made up using 3¢ and 8¢ coins.

Step-by-step solution

Step 1 of 3

The objective is to prove that $P(n)$ is true for every integer $n \geq 14$ using mathematical induction.

Step 2 of 3

Proof:

Let the property $P(n)$ be the sentence: " $n¢$ can be obtained using a combination of 3 $¢$ and 8 $¢$ coins".

Prove that $P(n)$ is true for every integer $n \geq 14$. For that first show that $P(14)$ are true.

$P(14)$ is true, since $14¢ = 2 \times 3¢ + 8¢$

Step 3 of 3

Let $k(\geq 14) \in \square$. Assume that combination of $3¢$ and $8¢$ coins can result in $k¢$.

Show that $(k+1)¢$ can be obtained using a combination of $3¢$ and $8¢$ coins.

If $k¢$ has one $8¢$ coin, then replace it with three $3¢$ coins to get a total of $(k+1)¢$.

If the $k¢$ consists of $3¢$ coins only then there must be a minimum of five 3-cent coins. Here replace five $3¢$ with two $8¢$ coin to get a total of $(k+1)¢$.

Thus, in both cases, 3-cent and 8-cent coins can result in $(k+1)¢$.

Hence $P(n)$ is true for every integer $n \geq 14$.

Chapter 5.3, Problem 2E

Problem

Use mathematical induction to show that any postage of at least 12¢ can be obtained using 3¢ and 7¢ stamps.

Step-by-step solution

Step 1 of 3

The objective is to prove that $P(n)$ is true for every integer $n \geq 12$ using mathematical induction.

Step 2 of 3

Proof:

$P(n)$: "Postage of $n¢$ can be obtained by a combination of $3¢$ and $7¢$ stamps".

$P(12)$ is true, since 12 $¢$ can be represented using four 3 $¢$ stamps.

Let $k(\geq 12) \in \square$. And suppose that:

$k¢$ can be obtained by a combination of $3¢$ and $7¢$ stamps.

Step 3 of 3

If $k¢$ does not consists of two $3¢$ stamps, then at least two $7¢$ stamps must be be there. Then replace two $7¢$ stamps with five $3¢$ stamps to obtain a total of $(k+1)¢$.

If $k¢$ consists of $3¢$ stamps only then replace two $3¢$ stamps with one $7¢$ stamps to get a total of $(k+1)¢$.

Thus, in both cases, $3¢$ and $7¢$ stamps can result in $(k+1)¢$.

Hence $P(n)$ is true for every integer $n \geq 12$.

Chapter 5.3, Problem 3E

Problem

Stamps are sold in packages containing either 5 stamps or 8 stamps.

a. Show that a person can obtain 5, 8, 10, 13, 15, 16, 20, 21, 24, or 25 stamps by buying a collection of 5-stamp packages and 8-stamp packages.

b. Use mathematical induction to show that any quantity of at least 28 stamps can be obtained by buying a collection of 5-stamp packages and 8-stamp packages.

Step-by-step solution

Step 1 of 3

a.

The objective is show $5, 8, 10, 13, 15, 16, 20, 21, 24 \text{ and } 25$ stamps can be obtained by buying of 5-stamp and 8-stamp packages.

$5 = 1 \times 5$
$8 = 1 \times 8$
$10 = 2 \times 5$
$13 = 1 \times 5 + 1 \times 8$
$15 = 3 \times 5$
$16 = 2 \times 8$
$20 = 4 \times 5$
$21 = 2 \times 8 + 1 \times 5$
$24 = 3 \times 8$
$25 = 5 \times 5$

Hence Proved.

Step 2 of 3

b.

The objective is to prove that $P(n)$ is true for every integer $n \geq 28$ using mathematical induction.

Proof:

Let the property $P(n)$ be the sentence: "*n* stamps can be obtained by buying a collection of 5-stamp packages and 8-stamp packages".

Prove that $P(n)$ is true for every integer $n \geq 28$. For that first show that $P(28)$ are true.

P(28) is true, since 28 stamps can be represented using four 5-stamp packages and one 8-stamp packages.

Now, show that for every integer $k \geq 28, \text{ if } P(k)$ is true then $P(k+1)$ is true.

$k(\geq 28) \in \square$. And suppose that:

k stamps can be obtained by collection of 5-stamp and 8-stamp packages.[Induction hypothesis]

Show that $k+1$ stamps can be obtained by collection of 5-stamp and 8-stamp packages.

Step 3 of 3

There are two possible cases: The collection of *k* stamps includes three 5-stamp packages or it does not.

Case 1: (the collection of *k* stamps includes three 5-stamp packages):

In this case replace three 5-stamp packages by two 8-stamp packages to make a collection of $k+1$ stamps.

Case 2: (the collection of *k* stamps does not include three 5-stamp packages):

In this case the collection includes at most two 5-stamp packages. Since there are at least 28 stamps and at most 10 come from 5-stamp packages, at least 18 stamps come from 8-stamp packages. And because the smallest multiple of 8 that is at least 18 is 24; at least three 8-stamp packages must be in the collection. Replace three 8-stamp packages by five 5-stamp packages to make a collection of $k+1$ stamps.

Thus in either of the two possible cases a collection of $k+1$ stamps can be obtained by collection of 5-stamp and 8-stamp packages.

Hence $P(n)$ is true for all $n \geq 28$.

Chapter 5.3, Problem 4E

Problem

For each positive integer *n*, let *P(n)* be the property

5*n* –1 is divisible by 4.

a. Write *P* (0). Is *P* (0) true?

b. Write *P (k)*.

c. Write *P(k* + 1).

d. In a proof by mathematical induction that this divisibility property holds for all integers *n* ≥ 0, what must be shown in the inductive step?

Step-by-step solution

Step 1 of 5

The property $P(n)$ is

$5^n - 1$ is divisible by 4

for each positive integer *n*.

(a)

Write $P(0)$.

Since $P(n)$ is " $5^n - 1$ is divisible by 4", substitute 0 for *n* to find $P(0)$.

Hence,

$P(0)$ is " $5^0 - 1$ is divisible by 4".

Now,

$$\begin{aligned} 5^0 - 1 &= 1 - 1 \\ &= 0 \end{aligned}$$

It is known that 0 is divisible by 4. Therefore, $5^0 - 1$ is divisible by 4, and hence $P(0)$ is true.

Step 2 of 5

(b)

Write $P(k)$.

Since $P(n)$ is $5^n - 1$ is divisible by 4, substitute *k* for *n* to find $P(k)$.

Hence,

$P(k)$ is $5^k - 1$ is divisible by 4.

Step 3 of 5

(c)

Write $P(k+1)$.

Since $P(n)$ is $5^n - 1$ is divisible by 4, substitute $k+1$ for *n* to find $P(k+1)$.

Hence,

$P(k+1)$ is $5^{k+1} - 1$ is divisible by 4.

Step 4 of 5

(d)

The objective is the find what must be shown in the inductive step to prove the property $P(n)$ for all integers $n \geq 0$.

<u>Principle of Mathematical Induction:</u> Let $P(n)$ be a property that is defined for integers *n*, and let *a* be a fixed integer. Then the statement $P(n)$ is true for all integers $n \geq a$ if

(i) $P(a)$ is true.

(ii) For all integers $k \geq a$, if $P(k)$ is true then $P(k+1)$ is true.

Since the property $P(n)$ should be true for all integers $n \geq 0$, $a = 0$.

Step 5 of 5

Now, $P(0)$ is true as already seen in part (a).

It is required to show the second part of the principle of mathematical induction.

That is, it is required to be shown that, "if for some integer $k \geq a$, $P(k)$ is true then $P(k+1)$ is true".

That is, it is required to be shown that, "if for some integer $k \geq 0$, $5^k - 1$ is divisible by 4, then $5^{k+1} - 1$ is divisible by 4".

Chapter 5.3, Problem 4E

Problem

For each positive integer *n*, let *P(n)* be the property

5*n* –1 is divisible by 4.

a. Write *P* (0). Is *P* (0) true?

b. Write *P (k)*.

c. Write *P(k* + 1).

d. In a proof by mathematical induction that this divisibility property holds for all integers *n* ≥ 0, what must be shown in the inductive step?

Step-by-step solution

Step 1 of 5

The property $P(n)$ is

$5^n - 1$ is divisible by 4

for each positive integer *n*.

(a)

Write $P(0)$.

Since $P(n)$ is " $5^n - 1$ is divisible by 4", substitute 0 for *n* to find $P(0)$.

Hence,

$P(0)$ is " $5^0 - 1$ is divisible by 4".

Now,

$$\begin{aligned} 5^0 - 1 &= 1 - 1 \\ &= 0 \end{aligned}$$

It is known that 0 is divisible by 4. Therefore, $5^0 - 1$ is divisible by 4, and hence $P(0)$ is true.

Step 2 of 5

(b)

Write $P(k)$.

Since $P(n)$ is $5^n - 1$ is divisible by 4, substitute *k* for *n* to find $P(k)$.

Hence,

$P(k)$ is $5^k - 1$ is divisible by 4.

Step 3 of 5

(c)

Write $P(k+1)$.

Since $P(n)$ is $5^n - 1$ is divisible by 4, substitute $k+1$ for *n* to find $P(k+1)$.

Hence,

$P(k+1)$ is $5^{k+1} - 1$ is divisible by 4.

Step 4 of 5

(d)

The objective is the find what must be shown in the inductive step to prove the property $P(n)$ for all integers $n \geq 0$.

<u>Principle of Mathematical Induction:</u> Let $P(n)$ be a property that is defined for integers *n*, and let *a* be a fixed integer. Then the statement $P(n)$ is true for all integers $n \geq a$ if

(i) $P(a)$ is true.

(ii) For all integers $k \geq a$, if $P(k)$ is true then $P(k+1)$ is true.

Since the property $P(n)$ should be true for all integers $n \geq 0$, $a = 0$.

Step 5 of 5

Now, $P(0)$ is true as already seen in part (a).

It is required to show the second part of the principle of mathematical induction.

That is, it is required to be shown that, "if for some integer $k \geq a$, $P(k)$ is true then $P(k+1)$ is true".

That is, it is required to be shown that, "if for some integer $k \geq 0$, $5^k - 1$ is divisible by 4, then $5^{k+1} - 1$ is divisible by 4".

Chapter 5.3, Problem 5E

Problem

For each positive integer *n*, let *P (n)* be the property

$2n < (n + 1)!$.

a. Write *P (2)*. Is *P (2)* true?

b. Write *P(k)*.

c. Write *P(k* + 1).

d. In a proof by mathematical induction that this inequality holds for all integers $n \geq 2$, what must be shown in the inductive step?

Step-by-step solution

Step 1 of 4

Consider that $P(n)$ is the property $2^n < (n+1)!$, where *n* is a positive integer.

a)

The objective is to verify whether $P(2)$ is true or not.

Let $n = 2$.

Then, substitute $n = 2$ in $P(n)$.

Therefore, $P(2)$ is $2^2 < (2+1)!$

$4 < (3)!$

$4 < 6$

Clearly, $2^2 < (2+1)!$.

Thus, $P(2)$ is true.

Step 2 of 4

b)

The objective is to write the expression for $P(k)$.

Let $n = k$.

Then, substitute $n = k$ in $P(n)$.

Therefore, the expression for $P(k)$ is $\boxed{2^k < (k+1)!}$.

Step 3 of 4

c)

The objective is to write the expression for $P(k+1)$.

Let $n = k+1$.

Then, substitute $n = k+1$ in $P(n)$.

Therefore, the expression for $P(k+1)$ is $\boxed{2^{k+1} < ((k+1)+1)!}$.

Step 4 of 4

d)

To show that the result is true for all integers $n \geq 2$, first assume that the result is true for $k \geq 2$.

That is $2^k < (k+1)!$, for $k \geq 2$.

Prove that that result is true for $n = k+1$ as,

Consider

$$\begin{aligned} 2^{k+1} &= 2^k \cdot 2 \\ &< ((k+1)!) \cdot 2 && \text{Since by assumption } 2^k < (k+1)! \\ &< (k+2)! && \text{Since } ((k+2)!) \cdot 2 < (k+2)!,\ \forall k \geq 2 \\ &< ((k+1)+1)! \end{aligned}$$

Therefore, the value $2^{k+1} < ((k+1)+1)!$ for all $k \geq 2$

That is, $2^{k+1} < ((k+1)+1)!$ is true, for $n = k+1$.

Therefore, the inductive step is $2^{k+1} < ((k+1)+1)!$, for $n = k+1$.

Hence, the statement $P(n)$ is true for all $n \geq 2$

Chapter 5.3, Problem 6E

Problem

For each positive integer n, let $P(n)$ be the sentence

Any checkerboard with dimensions $2 \times 3n$ can be completely covered with L-shaped trominoes.

a. Write $P(1)$. Is $P(1)$ true?

b. Write $P(k)$.

c. Write $P(k + 1)$.

d. In a proof by mathematical induction that $P(n)$ is true for each integer $n \geq 1$, what must be shown in the inductive step?

Step-by-step solution

Step 1 of 5

a.

Consider the following statement.

Any checkerboard whose dimension is $2 \times 3n$ can be fully covered with L-shaped trominoes.

The objective is to first write $P(1)$ and then check whether $P(1)$ is true or not.

Step 2 of 5

Obtain $P(1)$ as follows.

Any checkerboard whose dimension is 2×3 can be fully covered with L-shaped trominoes.

Obtain the diagram as follows.

Observe from the diagram that $P(1)$ is true.

Step 3 of 5

b.

The objective is to write $P(k)$.

Obtain $P(k)$ form the formula given as follows.

Any checkerboard whose dimension is $2 \times 3k$ can be fully covered with L-shaped trominoes.

Step 4 of 5

c.

The objective is to write $P(k+1)$.

Obtain $P(k+1)$ form the formula given as follows.

Any checkerboard whose dimension is $2 \times 3(k+1)$ can be fully covered with L-shaped trominoes.

Step 5 of 5

d.

The objective is to find what has to be shown in the inductive step.

For mathematical induction $k \geq 1$ such that k is any integer, then in the inductive step it should be shown that if $P(k)$, then $P(k+1)$.

That is if any checkerboard whose dimension is $2 \times 3k$ can be fully covered with L-shaped trominoes then any checkerboard whose dimension is $2 \times 3(k+1)$ can also be fully covered with L-shaped trominoes.

Chapter 5.3, Problem 8E

Problem

Prove the statement by mathematical induction.

Exercise

$5n - 1$ is divisible by 4, for each integer $n \geq 0$.

Step-by-step solution

Step 1 of 2

It is prove that $5^n - 1$ is divisible by 4.

Proof (by mathematical induction):

Let the property $P(n)$ be the sentence " $5^n - 1$ is divisible by 4."

$5^n - 1$ is divisible by 4. ? $P(n)$

For P(0) is true:

To find P(0), we must note that

$5^0 - 1$ is divisible by 4. ? P(0)

Since

$5^0 - 1 = 1 - 1 = 0$

and 0 is divisible by 4. So, P(0) is true.

Step 2 of 2

Now, we need to show that for all integers $k = 0$, if P(k) is true then P(k + 1) is also true:

Consider that P(k) is true for any integer $k = 0$.

Assume k be any integer with $k = 0$ for

$5^k - 1$ is divisible by 4. ? P(k) inductive hypothesis

Using the definition of divisibility, we have

$5^k - 1$ = 4r for integer r .

We must show that

$5^{k+1} - 1$ is divisible by 4. ? P(k + 1)

Since

$$\begin{aligned} 5^{k+1} - 1 &= 5^k \cdot 5 - 1 && [\text{by the laws of exponents}] \\ &= 5^k(4+1) - 1 \\ &= 5^k \cdot 4 + (5^k - 1) \\ &= 5^k \cdot 4 + 4r && [\text{by inductive hypothesis}] \\ &= 4(5^k + r) && [\text{by factoring out the 4}] \end{aligned}$$

As $5^{k+1} - 1$ is a factor of 4 and $(5^k + r)$ so, by definition of divisibility, $5^{k+1} - 1$ is divisible by 4.

Chapter 5.3, Problem 9E

Problem

Prove the statement by mathematical induction.

Exercise

$7n - 1$ is divisible by 6, for each integer $n \geq 0$.

Step-by-step solution

Step 1 of 2

Consider the statement as,

" $P(n): 7^n - 1$ is divisible by 6," for each integer $n \geq 0$.

The objective is to prove the above statement by mathematical induction.

Basis step:

For $n = 0$,

$P(0): 7^0 - 1 = 1 - 1 = 0$

Thus, 0 is divisible by 6 since zero is divisible by all integers.

Hence, $P(0)$ is true.

Inductive step:

Let $P(k)$ be true for some k for an arbitrary integer $k \geq 0$.

That is, $P(k): 7^k - 1$ is divisible by 6.

Thus, by the definition of divisibility, there exists an integer p, such that $7^k - 1 = 6p$.

Step 2 of 2

Now, need to prove that $P(k+1)$ is true.

Consider $7^{k+1} - 1$.

$$\begin{aligned} 7^{k+1} - 1 &= 7^k \times 7 - 1 \\ &= 7 \times (7^k) - 1 \\ &= 7 \times (7^k - 1 + 1) - 1 \\ &= 7 \times (6p + 1) - 1 \quad (\text{Since } 7^k - 1 = 6p) \\ &= 42p + 7 - 1 \\ &= 42p + 6 \\ &= 6(7p + 1) \end{aligned}$$

The value of $(7p+1)$ is an integer since product or sum of integers is also an integer.

Hence, by the definition of divisibility, $7^{k+1} - 1$ is divisible by 6 since there is an integer $q = 7p + 1$

Such that $7^{k+1} - 1 = 6q$.

Thus, $P(k+1)$ is true.

Therefore, by the principle of mathematical induction, the statement

" $P(n): 7^n - 1$ is divisible by 6," is true for each integer $n \geq 0$.

Chapter 5.3, Problem 10E

Problem

Prove the statement by mathematical induction.

Exercise

$n3 - 7n + 3$ is divisible by 3, for each integer $n \geq 0$.

Step-by-step solution

Step 1 of 3

Proof (by mathematical induction)

For the given statement, the property is the sentence " $n^3 - 7n + 3$ is divisible by 3 for each integer $n \geq 0$"

Show that the property is true for $n = 0$

When $n = 0$, the property is the sentence

$0^3 - 7 \times 0 + 3$

This is divisible by 3

However, $0^3 - 7 \times 0 + 3 = 0 - 0 + 3$

$= 3$

And 3 is divisible by 3 because $3 = 3 \times 1$

Thus, the property is true for $n = 0$

Step 2 of 3

Show that for any integer $k \geq 0$, if the property is true for $n = k$, then it is also true for $n = k + 1$

Let k be any integer where $k \geq 0$

Assume that the property is true for $n = k$

i.e., assume that " $k^3 - 7k + 3$ is divisible by 3" is true (the inductive hypothesis)

We must show that the property is true for $n = k + 1$

i.e., we must show that " $(k+1)^3 - 7(k+1) + 3$ is divisible by 3"

Now,

$$(k+1)^3 - 7(k+1) + 3$$

$$= k^3 + 3k^2 + 3k + 1 - 7k - 7 + 3 \quad \left(\therefore (a+b)^3 = a^3 + 3a^2b + 3ab^2 + b^3\right)$$

$$= \left(k^3 - 7k + 3\right) + \left(3k^2 + 3k + 1 - 7\right)$$

$$= \left(k^3 - 7k + 3\right) + \left(3k^2 + 3k - 6\right)$$

Step 3 of 3

$$= \left(k^3 - 7k + 3\right) + 3\left(k^2 + k - 2\right) \quad \rightarrow (1)$$

By the inductive hypothesis,

$k^3 - 7k + 3$ is divisible by 3

And $k^3 - 7k + 3 = 3 \cdot r$ for some integer r

Substituting the value into equation (1), we get

$$(k+1)^3 - 7(k+1) + 3 = 3 \cdot r + 3\left(k^2 + k - 2\right)$$

$$= 3\left(r + k^2 + k - 2\right)$$

Since k and r are integers, $r + k^2 + k - 2$ is clearly an integer

By the definition of divisibility,

$(k+1)^3 - 7(k+1) + 3$ is divisible by 3

$\therefore$ The property is true for $n = k + 1$

Thus, the property is true for all integers $n \geq 0$

Thus, proved

Chapter 5.3, Problem 11E

Problem

Prove the statement by mathematical induction.

Exercise

32*n* – 1 is divisible by 8, for each integer *n* ≥0.

Step-by-step solution

Step 1 of 2

Consider the statement as,

" $P(n): 3^{2n}-1$ is divisible by 8," for each integer $n \geq 0$.

The objective is to prove the above statement by mathematical induction.

Basis step:

For $n=0$,

$P(0): 3^{2(0)}-1=1-1=0$

Thus, 0 is divisible by 8 since zero is divisible by all integers.

Hence, $P(0)$ is true.

Inductive step:

Let $P(k)$ be true for some k for an arbitrary integer $k \geq 0$.

That is, $P(n): 3^{2n}-1$ is divisible by 8.

Thus, by the definition of divisibility, there exists an integer p, such that $3^{2k}-1=8p.$ .....(1)

Step 2 of 2

Now, need to prove that $P(k+1)$ is true.

Consider $3^{2(k+1)}-1$.

$$\begin{aligned} 3^{2(k+1)}-1 &= 3^{2k+2}-1 \\ &= 3^{2k}\cdot 3^2-1 \\ &= 9(8p+1)-1 \end{aligned}$$

$$\begin{aligned} &= 72p+9-1 \\ &= 72p+8 \\ &= 8(9p+1) \end{aligned}$$

The value of $(9p+1)$ is an integer since product or sum of integers is also an integer.

Hence, by the definition of divisibility, $3^{2(k+1)}-1$ is divisible by 8 since there is an integer $q=9p+1$

Such that $3^{2(k+1)}-1=8q.$

Thus, $P(k+1)$ is true.

Therefore, by the principle of mathematical induction, the statement

" $P(n): 3^{2n}-1$ is divisible by 8," is true for each integer $n \geq 0$.

Chapter 5.3, Problem 11E

Problem

Prove the statement by mathematical induction.

Exercise

32*n* – 1 is divisible by 8, for each integer *n* ≥0.

Step-by-step solution

Step 1 of 2

Consider the statement as,

" $P(n): 3^{2n}-1$ is divisible by 8," for each integer $n \geq 0$.

The objective is to prove the above statement by mathematical induction.

Basis step:

For $n=0$,

$P(0): 3^{2(0)}-1=1-1=0$

Thus, 0 is divisible by 8 since zero is divisible by all integers.

Hence, $P(0)$ is true.

Inductive step:

Let $P(k)$ be true for some k for an arbitrary integer $k \geq 0$.

That is, $P(n): 3^{2n}-1$ is divisible by 8.

Thus, by the definition of divisibility, there exists an integer p, such that $3^{2k}-1=8p.$ .....(1)

Step 2 of 2

Now, need to prove that $P(k+1)$ is true.

Consider $3^{2(k+1)}-1$.

$$\begin{aligned} 3^{2(k+1)}-1 &= 3^{2k+2}-1 \\ &= 3^{2k}\cdot 3^2-1 \\ &= 9(8p+1)-1 \end{aligned}$$

$$\begin{aligned} &= 72p+9-1 \\ &= 72p+8 \\ &= 8(9p+1) \end{aligned}$$

The value of $(9p+1)$ is an integer since product or sum of integers is also an integer.

Hence, by the definition of divisibility, $3^{2(k+1)}-1$ is divisible by 8 since there is an integer $q=9p+1$

Such that $3^{2(k+1)}-1=8q.$

Thus, $P(k+1)$ is true.

Therefore, by the principle of mathematical induction, the statement

" $P(n): 3^{2n}-1$ is divisible by 8," is true for each integer $n \geq 0$.

Chapter 5.3, Problem 12E

Problem

Prove the statement by mathematical induction.

Exercise

For any integer $n \geq 0$, $7n - 2n$ is divisible by 5.

Step-by-step solution

Step 1 of 2

Consider the statement as,

" $P(n): 7^n - 2^n$ is divisible by 5," for each integer $n \geq 0$.

The objective is to prove the above statement by mathematical induction.

Basis step:

For $n = 0$,

$P(0): 7^0 - 2^0 = 1 - 1 = 0$

Thus, 0 is divisible by 5 since zero is divisible by all integers.

Hence, $P(0)$ is true.

Inductive step:

Let $P(k)$ be true for some k for an arbitrary integer $k \geq 0$.

That is, $P(k): 7^k - 2^k$ is divisible by 5.

Thus, by the definition of divisibility, there exists an integer p, such that $7^k - 2^k = 5p$.

Step 2 of 2

Now, need to prove that $P(k+1)$ is true.

Consider $7^{k+1} - 2^{k+1}$.

$$\begin{aligned} 7^{k+1} - 2^{k+1} &= 7^k \cdot 7 - 2^k \cdot 2 \qquad \text{Adding and subtracting the term } 7 \cdot 2^k \\ &= 7^k \cdot 7 + 7 \cdot 2^k - 7 \cdot 2^k - 2^k \cdot 2 \\ &= 7\left(7^k - 2^k\right) + 2^k(7-2) \\ &= 7\left(7^k - 2^k\right) + 2^k \cdot 5 \\ &= 7(5p) + 2^k \cdot 5 \\ &= 5\left(7p + 2^k\right) \end{aligned}$$

The value of $\left(7p + 2^k\right)$ is an integer since product or sum of integers is also an integer.

Hence, by the definition of divisibility, $7^{k+1} - 2^{k+1}$ is divisible by 5 since there is an integer $q = \left(7p + 2^k\right)$

Such that $7^{k+1} - 2^{k+1} = 5q$

Thus, $P(k+1)$ is true.

Therefore, by the principle of mathematical induction, the statement

" $P(n): 7^n - 2^n$ is divisible by 5," is true for each integer $n \geq 0$.

Comments (1)

Where does 7*2^k come from that you are adding and subtracting

Chapter 5.3, Problem 13E

Problem

Prove the statement by mathematical induction.

Exercise

For any integer $n \geq 0$, $xn - yn$ is divisible by $x - y$, where x and y are any integers with $x \neq y$.

Step-by-step solution

Step 1 of 7

By induction method we have to prove that for all integers $n \geq 0$,

$$"x^n - y^n \text{ is divisble by } x - y" \qquad \leftarrow p(n)$$

Step 2 of 7

Show that $p(0)$ is true:

That means we have to prove

$$"x^0 - y^0 \text{ is divisble by } x - y" \qquad \leftarrow p(0)$$

For $n = 0$, $x^0 - y^0 = 1 - 1 = 0$ which is always divisible by $x - y$.

Therefore, $p(0)$ is true.

Step 3 of 7

Show that for all integers $n \geq 0$ if $p(k)$ is true then $p(k+1)$ is also true:

That means for $n = k$,

$$"x^k - y^k \text{ is divisble by } x - y" \qquad \leftarrow p(k)$$

Inductive hypothesis

Step 4 of 7

To show $p(k+1)$ is true, we must show

$$"x^{k+1} - y^{k+1} \text{ is divisble by } x - y" \qquad \leftarrow p(k+1)$$

Now

Step 5 of 7

$$\begin{aligned} x^{k+1} - y^{k+1} &= x^{k+1} - x.y^k + x.y^k - y^{k+1} && (\text{by algebra}) \\ &= x^k.x - x.y^k + x.y^k - y^k.y && (\text{by the law of exponents}) \\ &= x\left(x^k - y^k\right) + y^k(x - y) && (\text{by algebra}) \end{aligned}$$

Step 6 of 7

By inductive hypothesis $p(k)$ $"x^k - y^k \text{ is divisble by } x - y"$ and it is always true that $(x - y)$ is divisible by itself. Therefore $x\left(x^k - y^k\right) + y^k(x - y)$ is divisible by $(x - y)$ and hence $p(k+1)$ is also true.

Step 7 of 7

Since we proved the basis step $p(0)$ and inductive step, therefore the proposition is true.

Chapter 5.3, Problem 14E

Problem

Prove the statement by mathematical induction.

Exercise

$n3 - n$ is divisible by 6, for each integer $n \geq 0$.

Step-by-step solution

Step 1 of 4

Consider the statement as follows:

$n^3 - n$ is divisible by 6, for each integer $n \geq 0$.

The objective is to prove the statement by mathematical induction.

Step 2 of 4

Assume the statement as follows:

$P(n): n^3 - n$ is divisible by 6.

Step 1:

For $n = 0$,

$$\begin{aligned} n^3 - n &= 0^3 - 0 \\ &= 0 \end{aligned}$$

Since 0 is divisible by 6.

Therefore, $n^3 - n$ is divisible by 6 for $n = 0$.

This implies $P(n)$ is true for $n = 0$.

Step 3 of 4

Step 2:

Assume that $P(n)$ is true for any positive integer $n = k$.

This implies that $n^3 - n$ is divisible by 6 for $n = k$.

Since $n^3 - n$ is divisible by 6 for $n = k$.

Therefore, $k^3 - k = 6m$ for any integer *m*.

Step 4 of 4

Step 3:

Use step 2, to prove that $P(n)$ is true for $n = k + 1$.

For $n = k + 1$,

$$\begin{aligned} n^3 - n &= (k+1)^3 - k - 1 \\ &= k^3 + 1^3 + 3k^2 + 3k - k - 1 \\ &= (k^3 - k) + (3k^2 + 3k) \\ &= 6m + 3k(k+1) \qquad \text{From step 2: } k^3 - k = 6m \end{aligned}$$

Since $k(k+1)$ is the product of two consecutive integers.

This implies that one of k and $k+1$ must be even.

Therefore, the product $k(k+1)$ must be even.

Thus, assume $k(k+1) = 2\lambda$ for any integer λ.

Thus, the above equation becomes.

$$\begin{aligned} n^3 - n &= 6m + 3k(k+1) \\ &= 6m + 3(2\lambda) \\ &= 6m + 6\lambda \\ &= 6(m + \lambda) \end{aligned}$$

The sum of two integers is an integer.

Therefore, $m = \lambda$ must be an integer.

This implies that $n^3 - n$ is divisible by 6 for $n = k + 1$.

This implies that $P(n)$ is true for $n = k + 1$.

For $P(n): n^3 - n$ is divisible by 6,

$P(0)$ is true and for $P(k)$ to be true, $P(k+1)$ is also true.

Therefore, by mathematical induction $P(n)$ is true for all integers $n \geq 0$.

Hence, $n^3 - n$ is divisible by 6, for each integer $n \geq 0$.

Chapter 5.3, Problem 15E

Problem

Prove the statement by mathematical induction.

Exercise

$n(n2 + 5)$ is divisible by 6, for each integer $n \geq 0$.

Step-by-step solution

Step 1 of 2

The objective is to prove the following statement using mathematical induction.

$n\left(n^2+5\right)$ is divisible by 6, for each integer $n \geq 0$.

Let $P(n): n\left(n^2+5\right)$ is divisible by 6.

Basis Step:

For $n=0$, $P(0): 0\left(0^2+5\right)=0$ is divisible by 6.

Hence $P(0)$ is true.

Step 2 of 2

Inductive Hypothesis:

Suppose that k is any integer with $k \geq 0$ such that $P(k): k\left(k^2+5\right)$ is divisible by 6.

Need to show that $P(k+1)$ is divisible by 6.

Consider

$$\begin{aligned}(k+1)\left((k+1)^2+5\right) &= (k+1)\left(k^2+2k+1+5\right) \\ &= (k+1)\left(\left(k^2+5\right)+(2k+1)\right) \\ &= (k+1)\left(k^2+5\right)+(k+1)(2k+1)\end{aligned}$$

$$\begin{aligned}&= k\left(k^2+5\right)+\left(k^2+5\right)+\left(2k^2+3k+1\right) \\ &= k\left(k^2+5\right)+\left(3k^2+3k+6\right) \\ &= k\left(k^2+5\right)+3k(k+1)+6\end{aligned}$$

As the product of two consecutive numbers is even so $k(k+1)$ is even.

It follows that $3k(k+1)$ is a multiple of 6.

Thus, each term of $(k+1)\left((k+1)^2+5\right)$ is divisible by 6.

Therefore, $P(k+1)$ is divisible by 6.

Hence, $n\left(n^2+5\right)$ is divisible by 6, for each integer $n \geq 0$.

Chapter 5.3, Problem 16E

Problem

Prove the statement by mathematical induction.

Exercise

$2n<(n+1)!$, for all integers $n \geq 2$.

Step-by-step solution

Step 1 of 3

The objective is to prove that $2^n < (n+1)!$ for all integers $n \geq 2$.

Step 2 of 3

Consider $P(n): 2^n < (n+1)!$ for all integers $n \geq 2$.

Use mathematical induction to prove the property $P(n)$.

Base Step:

For $n = 2$,

Substitute $n = 2$ in $P(2)$.

$$\begin{aligned} 2^2 &< (2+1)! \\ 4 &< 3! \\ &< 6 \end{aligned}$$

Therefore, the result is true for $n = 2$.

For $n = 3$,

Substitute $n = 3$ in $P(3)$

$$\begin{aligned} 3^2 &< (3+1)! \\ 9 &< 4! \\ 9 &< 24 \end{aligned}$$

Therefore, the result is true for $n = 3$

Step 3 of 3

Inductive Hypothesis:

Assume that the result is true for $n = k$.

That is:

$2^k < (k+1)!$.

Need to show that the result is true for $n = k+1$.

That is:

$2^{k+1} < ((k+1)+1)!$.

Rewrite 2^{k+1} as:

$$\begin{aligned} 2^{k+1} &= 2 \cdot 2^k \\ &< 2 \cdot (k+1)! \\ &< (k+2)(k+1)! \end{aligned}$$

As $2 < k+2$,

This implies,

$$\begin{aligned} 2^{k+1} &= (k+2)! \\ &= ((k+1)+1)! \end{aligned}$$

Thus, $P(n)$ is true for $n = k+1$.

Hence, **it proved** $2^n < (n+1)!$ for all integers $n \geq 2$.

Chapter 5.3, Problem 17E

Problem

Prove the statement by mathematical induction.

Exercise

$1 + 3n \le 4n$, for every integer $n \ge 0$.

Step-by-step solution

Step 1 of 2

The objective is to prove $1+3n \le 4^n$, for every integer $n \ge 0$ using mathematical induction.

Let $P(n)$ be the inequality $1+3n \le 4^n$ for every integer $n \ge 0$.

Basis step:

Show that the statement is true for $n = 0$.

$$\begin{aligned} 1+3(0) &\overset{?}{\le} 4^0 \\ 1 &\le 1 \end{aligned}$$

Thus, the inequality is true for $n = 0$.

Step 2 of 2

Inductive Step:

Assume that the inequality is true for $n = k$.

That is, $1+3k \le 4^k$.

Need to show that the result is true for $n = k+1$.

Consider,

$$\begin{aligned} 1+3(k+1) &= 1+3k+3 \\ &\le 4^k+3 && \text{By assumption} \\ &\le 4^k+3\cdot 4^k && \text{since } 3 < 3\cdot 4^k \\ &= 4^k(1+3) \\ &= 4^{k+1} \end{aligned}$$

Thus, the result is true for $n = k+1$.

Therefore, $1+3n \le 4^n$, for every integer $n \ge 0$.

Chapter 5.3, Problem 18E

Problem

Prove the statement by mathematical induction.

Exercise

$5n + 9 \le 6n$, for all integers $n \ge 2$.

Step-by-step solution

Step 1 of 3

Consider the statement " $5^n + 9 < 6^n$, for all integers $n \ge 2$". The objective of the problem is to prove the given statement by using mathematical induction.

Let $P(n)$ be the statement $5^n + 9 < 6^n$. Take, $n = 2$, then

$$5^2 + 9 < 6^2$$
$$34 < 36$$

Thus, $P(2)$ is true, since $34 < 36$.

Step 2 of 3

Now, suppose that $P(k)$ is true for an arbitrary integer $k \ge 2$. That is,

$$5^k + 9 < 6^k$$

Then, prove that $P(k+1)$ and this establishes the proof of the statement for all $n \ge 2$ by induction. That is, to prove that $5^{k+1} + 9 < 6^{k+1}$. Now,

$$5^{k+1} + 9 = 5 \cdot 5^k + 9$$

By using the inductive hypothesis in the alternative form, $5^k < 6^k - 9$. Then,

$$\begin{aligned} 5^{k+1} + 9 &< 5 \cdot (6^k - 9) + 9 \\ &= 5 \cdot 6^k - 45 + 9 && \text{Using the distributive property} \\ &= 5 \cdot 6^k - 36 && \text{Simplify} \end{aligned}$$

Step 3 of 3

But, $5 \cdot 6^k < 6 \cdot 6^k$ or 6^{k+1} and $-36 < 0$, so that this quantity is less than 6^{k+1}. Therefore, $5^{k+1} + 9 < 6^{k+1}$, as desired.

Thus, $P(k+1)$ is true.

Hence, by the principle of mathematical induction, $P(n)$ is true for all nonnegative integers $n \ge 2$

Chapter 5.3, Problem 19E

Problem

Prove the statement by mathematical induction.

Exercise

*n*2<*2n,* for all integers *n*≥ 5.

Step-by-step solution

Step 1 of 3

Mathematical induction makes knowledge of the general pattern a matter of mathematical certainty rather than vague conjecture.

Step 2 of 3

Consider the property $P(n)$ be the inequality $n^2 < 2^n$.

First check that $P(5)$ is true;

$5^2 < 2^5$

The left-hand side is;

$5^2 = 25$

And, the right hand side is;

$2^5 = 32$

So, $P(5)$ is true.

Step 3 of 3

Suppose that $P(k)$ is true.

To show that for all integers $k \geq 5$,

If $P(k)$ is true then $P(k+1)$ is true.

Consider *k* be any integer with $k \geq 5$ and such that,

$k^2 < 2^k$

Then, show that $P(k+1)$ is true, that is;

$(k+1)^2 < 2^{k+1}$

Then proceed as shown below;

$$\begin{aligned}(k+1)^2 &= (k^2+2k+1)\\ &< 2^k+2k+1\\ &< 2^k+2^k\end{aligned}$$

Since, $2k+1 < 2^k$, for all integers $k \geq 5$ therefore,

$$\begin{aligned}k^2+2k+1 &< 2^k+2k+1\\ &< 2^k+2^k\end{aligned}$$

This implies that,

$$\begin{aligned}(k+1)^2 &< 2\cdot 2^k\\ &= 2^{k+1}\end{aligned}$$

Hence, by the mathematical induction $n^2 < 2^n$ is true for all integers $n \geq 5$.

Hence, proved

Comments (1)

How did we know 2k + 1 was < 2^k

Chapter 5.3, Problem 20E

Problem

Prove the statement by mathematical induction.

Exercise

$2n \le (n+2)!$, for all integers $n \ge 0$.

Step-by-step solution

Step 1 of 3

Consider the statement as, "$2^n < (n+2)!$, for all integers $n \ge 0$."

The objective is to prove the above statement by using Mathematical induction.

Let the property $P(n)$ be the sentence "$2^n < (n+2)!$".

That is,

$P(n): 2^n < (n+2)!$

Show that the statement $P(0)$ is true.

That is, need to show that $2^0 < (0+2)!$

But, $2^0 = 1$ and $(0+2)! = 2! = 2$.

Clearly, $1 < 2$

$\Rightarrow 2^0 < (0+2)!$

Hence $P(0)$ is true. (Basis step)

Step 2 of 3

Now, show that for all integers $k \ge 0$, if the property is true for $n = k$ that is, if $P(k)$ is true, then

$P(k+1)$ is also true.

Let k be any integer such that $k \ge 0$

Assume that the property is true for $n = k$.

That is, the statement $P(k): 2^k < (k+2)!$ is true for some integer $k \ge 0$. (Inductive Hypothesis)

Need to show that the property is true for $n = k+1$.

That is, should show that

$P(k+1): 2^{k+1} < (k+1+2)!$

$P(k+1): 2^{k+1} < (k+3)!$ is true.

Step 3 of 3

Consider the left hand side of the statement in $P(k+1)$ as,

$$\begin{aligned} 2^{k+1} &= 2^k \cdot 2 && \text{by the laws of exponents} \\ &< (k+2)! \cdot 2 && \text{by inductive hypothesis} \\ &< (k+2)! \cdot (k+3) && (\text{Since } 2 < k+3 \text{ becuase } k \ge 0) \\ &= (k+3) \cdot (k+2)! \\ &= (k+3)! \end{aligned}$$

Thus, the property is true for $n = k+1$.

That is, $P(k+1): 2^{k+1} < (k+3)!$ is true.

Since, the basis step and the inductive step have been proved, the proposition $P(n): 2^n < (n+2)!$ is true for all integers $n \ge 0$.

Chapter 5.3, Problem 21E

Problem

Prove the statement by mathematical induction.

Exercise

$\sqrt{n} < \frac{1}{\sqrt{1}} + \frac{1}{\sqrt{2}} + \cdots + \frac{1}{\sqrt{n}}$ for all integers $n \geq 2$.

Step-by-step solution

Step 1 of 6

Consider the statement,

$\sqrt{n} < \frac{1}{\sqrt{1}} + \frac{1}{\sqrt{2}} + \cdots + \frac{1}{\sqrt{n}}$, for all integers $n \geq 2$.

Let the property $P(n)$ be the equation $\sqrt{n} < \frac{1}{\sqrt{1}} + \frac{1}{\sqrt{2}} + \ldots + \frac{1}{\sqrt{n}}$.

The objective is to show that $P(n)$ is true for all integers $n \geq 2$ by using mathematical induction.

Step 2 of 6

Base step:

Show that $P(2)$ is true:

That is to show that $\sqrt{2} < \frac{1}{\sqrt{1}} + \frac{1}{\sqrt{2}}$ $P(2)$

The left hand side of the equation is $\sqrt{2} = 1.41421$

The right-hand side of the equation is,

$\frac{1}{\sqrt{1}} + \frac{1}{\sqrt{2}} = \frac{1}{1} + \frac{1}{\sqrt{2}}$ $\sqrt{1} = 1$

$= 1 + \frac{1}{1.41421}$ $\sqrt{2} = 1.41421$

$\approx 1 + 0.707108$ Simplify

$= 1.707108$

It follows that $\sqrt{2} < \frac{1}{\sqrt{1}} + \frac{1}{\sqrt{2}}$.

Hence, $P(2)$ is true.

Step 3 of 6

Show that for all integers $k \geq 2$, if $P(k)$ is true then $P(k+1)$ is also true.

Suppose $P(k)$ is true.

Then the inductive hypothesis is,

$\sqrt{k} < \frac{1}{\sqrt{1}} + \frac{1}{\sqrt{2}} + \cdots + \frac{1}{\sqrt{k}}$ $(k \geq 2)$

Step 4 of 6

Now, show that $P(k+1)$ is true.

That is to show that $\sqrt{k+1} < \frac{1}{\sqrt{1}} + \frac{1}{\sqrt{2}} + \cdots + \frac{1}{\sqrt{k}} + \frac{1}{\sqrt{k+1}}$.

Remember that

$\sqrt{k} < \sqrt{k+1}$ True for all $k \geq 2$

$\sqrt{k} - \frac{1}{\sqrt{k+1}} < \sqrt{k+1} - \frac{1}{\sqrt{k+1}}$ ..... (1) Subtract $\frac{1}{\sqrt{k+1}}$ from both sides

Step 5 of 6

Calculate the value of $\sqrt{k+1} - \frac{1}{\sqrt{k+1}}$:

$\sqrt{k+1} - \frac{1}{\sqrt{k+1}} = \frac{\left(\sqrt{k+1}\right)\left(\sqrt{k+1}\right) - 1}{\sqrt{k+1}}$ Take LCM

$= \frac{k+1-1}{\sqrt{k+1}}$

$= \frac{k}{\sqrt{k+1}}$

$= \frac{\cancel{\sqrt{k}} \cdot \sqrt{k}}{\cancel{\sqrt{k}} \sqrt{1 + \frac{1}{k}}}$

$< \sqrt{k}$ True for all $k \geq 2$

Thus, equation (1) becomes as follows:

$\sqrt{k} - \frac{1}{\sqrt{k+1}} < \sqrt{k+1} - \frac{1}{\sqrt{k+1}}$

$< \sqrt{k}$

Step 6 of 6

Consider the expression,

$\sqrt{k+1} - \frac{1}{\sqrt{k+1}} < \sqrt{k}$

$\sqrt{k+1} - \frac{1}{\sqrt{k+1}} < \frac{1}{\sqrt{1}} + \frac{1}{\sqrt{2}} + \cdots + \frac{1}{\sqrt{k}}$ By inductive hypothesis $P(k)$

$\sqrt{k+1} < \frac{1}{\sqrt{1}} + \frac{1}{\sqrt{2}} + \cdots + \frac{1}{\sqrt{k}} + \frac{1}{\sqrt{k+1}}$ Add $\frac{1}{\sqrt{k+1}}$ to both sides

Therefore, the statement becomes,

$\sqrt{k+1} < \frac{1}{\sqrt{1}} + \frac{1}{\sqrt{2}} + \cdots + \frac{1}{\sqrt{k}} + \frac{1}{\sqrt{k+1}}$

That is, $P(k+1)$ is true.

Hence from the principle of mathematical induction, $\boxed{\sqrt{n} < \frac{1}{\sqrt{1}} + \frac{1}{\sqrt{2}} + \cdots + \frac{1}{\sqrt{n}},\ n \geq 2}$.

Chapter 5.3, Problem 22E

Problem

Prove the statement by mathematical induction.

Exercise

1+ *nx* ≤ (1 + *x*)*n*, for all real numbers *x* ≥ –1 and integers *n* ≥2.

Step-by-step solution

Step 1 of 5

Let the property $P(n)$ be the inequality $1+nx \le (1+x)^n$. This is true for all real numbers $x > -1$ and integers $n \ge 2$.

Step 2 of 5

Show that $P(2)$ is true for all real numbers $x > -1$.

To establish $P(2)$ we must show that

$$\begin{aligned} 1+2(0) &\le (1+0)^2 \\ 1+0 &\le 1^2 \end{aligned}$$

$1+0=1$ and $1^2=1$, hence $1=1$.

Step 3 of 5

Suppose *x* is 1. To establish $P(2)$ we must show that

$$\begin{aligned} 1+2(1) &\le (1+1)^2 \\ 1+2 &\le 2^2 \end{aligned}$$

$1+2=3$ and $2^2=4$, hence $3<4$.

Show that for all integers $n \ge 2$ and real numbers $x > -1$, if $P(k)$ is true then $P(k+1)$ is also true.

Suppose $P(k)$ is true for a particular but arbitrarily chosen integer $k \ge 2$ and real numbers $x > -1$.

Step 4 of 5

Suppose that *k* is any integer with $k \ge 2$ such that $1+kx \le (1+x)^k$. We must show that $P(k+1)$ is true. That is we must show that $1+(k+1)x \le (1+x)^{k+1}$. Left side becomes as

$$1+kx+x \le (1+x)^k + (1+x)$$

By the inductive hypothesis, $1+kx \le (1+x)^k$ and for all real numbers *x*, $x \le 1+x$.

Step 5 of 5

Hence $1+(k+1)x \le (1+x)^k + (1+x)$. If it can be shown that $(1+x)^k + (1+x)$ is less than or equal to $(1+x)^{k+1}$, then the desired inequality will have been proved. But since the quantity $(1+x)^k$, (where 1 + *x* should be greater than or equal to 2, thereby *x* being greater than or equal to 1) can be added to or subtracted from an inequality without changing its direction,

$$\begin{aligned} (1+x)^k + (1+x) &\le (1+x)^{k+1} \\ (1+x) &\le (1+x)^{k+1} - (1+x)^k \\ &= (1+x)^k (1+x-1) \\ &= (1+x)^k x \end{aligned}$$

Multiplying or dividing an inequality by $1+x$ does not change its direction, as *x* is a real number greater than or equal to 1.

$$\begin{aligned} (1+x) &\le (1+x)^k x \\ 1 &\le \frac{(1+x)^k}{1+x} x \\ &= (1+x)^{k-1} x \end{aligned}$$

Last inequality is clearly true for all $k \ge 2$. Hence it is true that $1+(k+1)x \le (1+x)^{k+1}$.

Chapter 5.3, Problem 23E

Problem

Prove the statement by mathematical induction.

Exercise

a. $n3 > 2n + 1$, for all integers $n \geq 2$.

b. $n! > n2$, for all integers $n \geq 4$.

Step-by-step solution

Step 1 of 8

a)

For the given statement, the property is the inequality " $n^3 > 2n+1$ for all integers $n \geq 2$"

Show that the property is true for $n = 2$

When $n = 2$, the property is the inequality, " $2^3 > 2\times 2+1$"

But $2^3 = 8$ & $2\times 2+1 = 4+1 = 5$

Then, $8 > 5$

$\Rightarrow 2^3 > 2\times 2+1$

Thus, the property is true for $n = 2$

Step 2 of 8

Show that for all integers $k \geq 2$, if the property is true for $n = k$, then it is also true for $n = k+1$

Let k be any integer where $k \geq 2$

Assume that the property is true for $n = k$

i.e., suppose that $k^3 > 2k+1$

We must show that the property is true for $n = k+1$

i.e., we must show that $(k+1)^3 > 2(k+1)+1$

Step 3 of 8

Now,

$(k+1)^3 = k^3 + 3k^2 + 3k + 1$

Since $k^3 > 2k+1$ (by the inductive hypothesis)

And $3k^2 + 3k + 1 > 2$

Clearly,

$\Rightarrow k^3 + 3k^2 + 3k + 1 > 2k + 1 + 2$

$\Rightarrow (k+1)^3 > 2(k+1)+1$

Thus, the property is true for $n = k+1$

Step 4 of 8

Thus, the property is true for all integers $n \geq 2$

Thus, proved.

Step 5 of 8

b)

For the given statement, the property is the inequality " $n! > n^2$ for all integers $n \geq 4$"

Show that the property is true for $n = 4$

When $n = 4$, the property is the inequality " $4! > 4^2$"

But $4! = 4\times 3\times 2\times 1 = 24$

$4^2 = 4\times 4 = 16$

Clearly, $24 > 16$

$\Rightarrow 4! > 4^2$

Thus, the property is true for $n = 4$

Step 6 of 8

Show that for all integers $k \geq 4$, if the property is true for $n = k$, then it is also true for $n = k+1$

Let k be any integer with $k \geq 4$

Assume that the property is true for $n = k$

i.e., suppose that $k! > k^2$

We must show that the property is true for $n = k+1$

i.e., we must show that $(k+1)! > (k+1)^2$

Step 7 of 8

We know that

$k! > k+1$ for all $k > 2$

$\Rightarrow (k+1)\times k! > (k+1)(k+1)$

$\Rightarrow (k+1)! > (k+1)^2$

Thus, the property is true for $n = k+1$

Thus, the property is true for all integers $n \geq 4$

Step 8 of 8

Thus, proved.

Chapter 5.3, Problem 24E

Problem

A sequence *a*1, *a2, a3,* ... is defined by letting *a*1 = 3 and *ak* = *7ak—1* for all integers *k* ≥2. Show that *an* = 3•7*n*–1 for all integers *n* ≥ 1.

Step-by-step solution

Step 1 of 2

Proof: (by mathematical induction):

For the given statement, consider the property $P(n)$ be the equation $a_n = 3 \cdot 7^{n-1}$.

Show that $P(1)$ is true:

$P(1)$ says that $a_1 = 3 \cdot 7^{1-1}$. The left-hand side is a_1 and the right hand side is $3 \cdot 7^{1-1} = 3$.
$P(1)$ is true.

Step 2 of 2

Show that for all integers $k \geq 1$, if $P(k)$ is true then $P(k+1)$ is true.

Consider *k* be any integer with $k \geq 1$ and such that $P(k)$ is true.

$a_k = 3 \cdot 7^{k-1} \quad \leftarrow P(k)$ inductive hypothesis

We must show that $P(k+1)$ is true, that is

$$a_{k+1} = 3 \cdot 7^{(k+1)-1}$$
$$a_{k+1} = 3 \cdot 7^k$$

But

$$\begin{aligned} a_{k+1} &= 7a_k && [\text{by inductive hypothesis}] \\ &= 7\left(3 \cdot 7^{k-1}\right) && [\text{by inductive hypothesis}] \\ &= 3 \cdot 7^k && [\text{by law of exponents}] \end{aligned}$$

$3 \cdot 7^k$ is result of $P(k+1)$.

We proved the basis step and the inductive step, therefore the proposition is true.

Chapter 5.3, Problem 25E

Problem

A sequence *b0, b*1, *b2,* ... is defined by letting *b0* = 5 and *bk* = 4 + *bk*–1 for all integers *k* > 1. Show that *bn* ≥4*n* for all integers *n* ≥ 0.

Step-by-step solution

Step 1 of 8

Let $b_0,\ b_1,\ b_2, \ldots$ be the sequence defined by specifying that $b_0 = 5$ and $b_k = 4 + b_{k-1}$ for all integers $k \geq 1$. Let the property $P(n)$ be the inequality $b_n > 4n$. We will use mathematical induction to prove that for all integers $n \geq 0$, $P(n)$ is true.

Step 2 of 8

Show that $P(1)$ is true.

To establish $P(1)$ we must show that

$$\begin{aligned} b_1 &> 4(1) \\ b_1 &> 4 \end{aligned}$$

Left side of $P(1)$ is 9 by definition of $b_0,\ b_1,\ b_2, \ldots$ and the right side of $P(1)$ is 4. Hence 9 > 4 implies $P(1)$ is true.

Step 3 of 8

Show that for all integers $k \geq 0$, if $P(k)$ is true then $P(k+1)$ is also true.

Suppose that $P(k)$ is true for a particular but arbitrarily chosen integer $k \geq 0$. Suppose that $b_k > 4k$.

Step 4 of 8

We must show that $P(k+1)$ is true. That is we must show that $b_{k+1} > 4(k+1)$. But the left side of $P(k+1)$ is $b_{k+1} = 4 + b_{k+1-1}$. This is by the definition of $b_0,\ b_1,\ b_2, \ldots$

$$\begin{aligned} b_{k+1} &= 4 + b_{k+1-1} \\ &= 4 + b_k \end{aligned}$$

Step 5 of 8

Now subtract 4 from both the sides to get,

Step 6 of 8

$$\begin{aligned} b_{k+1} &= 4 + b_k \\ b_{k+1} - 4 &= 4 + b_k - 4 \\ b_{k+1} - 4 &= b_k \end{aligned}$$

Step 7 of 8

Since $b_k > 4k$, the above equation becomes,

$$\begin{aligned} b_{k+1} - 4 &= b_k \\ b_{k+1} - 4 &> 4k \end{aligned}$$

Step 8 of 8

Adding 4 on both sides of the equation does not change the direction and hence

$$\begin{aligned} b_{k+1} - 4 &> 4k \\ b_{k+1} - 4 + 4 &> 4k + 4 \\ b_{k+1} &> 4k + 4 \\ b_{k+1} &> 4(k+1) \end{aligned}$$

Last inequality is clearly the right side of the equation as was to be shown.

Chapter 5.3, Problem 25E

Problem

A sequence *b0, b*1, *b2,* ... is defined by letting *b0* = 5 and *bk* = 4 + *bk*–1 for all integers *k* > 1. Show that *bn* ≥4*n* for all integers *n* ≥ 0.

Step-by-step solution

Step 1 of 8

Let $b_0,\ b_1,\ b_2, \ldots$ be the sequence defined by specifying that $b_0 = 5$ and $b_k = 4 + b_{k-1}$ for all integers $k \geq 1$. Let the property $P(n)$ be the inequality $b_n > 4n$. We will use mathematical induction to prove that for all integers $n \geq 0$, $P(n)$ is true.

Step 2 of 8

Show that $P(1)$ is true.

To establish $P(1)$ we must show that

$$\begin{aligned} b_1 &> 4(1) \\ b_1 &> 4 \end{aligned}$$

Left side of $P(1)$ is 9 by definition of $b_0,\ b_1,\ b_2, \ldots$ and the right side of $P(1)$ is 4. Hence 9 > 4 implies $P(1)$ is true.

Step 3 of 8

Show that for all integers $k \geq 0$, if $P(k)$ is true then $P(k+1)$ is also true.

Suppose that $P(k)$ is true for a particular but arbitrarily chosen integer $k \geq 0$. Suppose that $b_k > 4k$.

Step 4 of 8

We must show that $P(k+1)$ is true. That is we must show that $b_{k+1} > 4(k+1)$. But the left side of $P(k+1)$ is $b_{k+1} = 4 + b_{k+1-1}$. This is by the definition of $b_0,\ b_1,\ b_2, \ldots$

$$\begin{aligned} b_{k+1} &= 4 + b_{k+1-1} \\ &= 4 + b_k \end{aligned}$$

Step 5 of 8

Now subtract 4 from both the sides to get,

Step 6 of 8

$$\begin{aligned} b_{k+1} &= 4 + b_k \\ b_{k+1} - 4 &= 4 + b_k - 4 \\ b_{k+1} - 4 &= b_k \end{aligned}$$

Step 7 of 8

Since $b_k > 4k$, the above equation becomes,

$$\begin{aligned} b_{k+1} - 4 &= b_k \\ b_{k+1} - 4 &> 4k \end{aligned}$$

Step 8 of 8

Adding 4 on both sides of the equation does not change the direction and hence

$$\begin{aligned} b_{k+1} - 4 &> 4k \\ b_{k+1} - 4 + 4 &> 4k + 4 \\ b_{k+1} &> 4k + 4 \\ b_{k+1} &> 4(k+1) \end{aligned}$$

Last inequality is clearly the right side of the equation as was to be shown.

Chapter 5.3, Problem 26E

Problem

A sequence *c0, c1, c2,* ... is defined by letting *c0* = 3 and *ck* = (*ck*–1)2 for all integers *k* ≥ 1. Show that *cn* = 32*n* for all integers *n* ≥ 0.

Step-by-step solution

Step 1 of 2

The objective is to show that $c_n = 3^{2^n}$ for all integers $n \geq 0$ and a sequence $c_0, c_1, c_2, \ldots$ defined by $c_0 = 3$ and $c_k = (c_{k-1})^2$ for all integers $k \geq 1$.

Let $P(n)$ be the property $c_n = 3^{2^n}$ for all integers $n \geq 0$.

Basis step:

For $n = 0$ the result is $c_0 = 3^{2^0} = 3^1 = 3$.

Thus, the property is true for $n = 0$.

Step 2 of 2

Inductive step:

Assume that the property is true for $n = k$.

That is, $c_k = 3^{2^k}$.

Need to show that the property is true for $n = k+1$.

That is $c_{k+1} = (c_{k+1-1})^2 = (c_k)^2$.

By inductive hypothesis, $c_k = 3^{2^k}$.

Then

$$\begin{aligned} c_{k+1} &= (c_k)^2 \\ &= \left(3^{2^k}\right)^2 \\ &= 3^{2^k} \cdot 3^{2^k} \\ &= 3^{\left(2^k + 2^k\right)} \quad \text{by } a^m \cdot a^n = a^{m+n} \\ &= 3^{2 \cdot 2^k} \\ &= 3^{2^{k+1}} \end{aligned}$$

Therefore, the property is true for $n = k+1$.

Hence, $c_n = 3^{2^n}$ for all integers $n \geq 0$.

Chapter 5.3, Problem 27E

Problem

A sequence *d2, d3,* ... is defined by letting *d1* = 2 and $d_k = \frac{d_{k-1}}{k}$ for all integers $k \geq 2$.

Show that for all integers $n \geq 1$ $d_n = \frac{2}{n!}$.

Step-by-step solution

Step 1 of 5

Consider that the sequence $d_1, d_2, d_3 \ldots$ is defined as $d_1 = 2$ and $d_k = \frac{d_{k-1}}{k}$.

The objective is to show that $d_n = \frac{2}{n!}$, for all integers $n \geq 1$.

Write the sequence by using the definition as follows:

$$\begin{aligned} d_1 &= 2 \\ d_2 &= \frac{d_1}{2} \\ &= \frac{2}{2} \\ &= 1 \\ d_3 &= \frac{d_2}{3} \\ &= \frac{1}{3} \\ d_4 &= \frac{d_3}{4} \\ &= \frac{\left(1/3\right)}{4} \\ &= \frac{1}{12} \end{aligned}$$

Step 2 of 5

Further, find the numbers in the sequence as follows:

$$\begin{aligned} d_5 &= \frac{d_4}{5} \\ &= \frac{\left(1/12\right)}{5} \\ &= \frac{1}{60} \\ d_6 &= \frac{d_5}{6} \\ &= \frac{\left(1/60\right)}{6} \\ &= \frac{1}{360} \end{aligned}$$

So, the sequence becomes $2, 1, \frac{1}{3}, \frac{1}{12}, \frac{1}{60}, \frac{1}{360}, \ldots$.

Rewrite the sequence as follows:

$$\begin{aligned} 2, 1, \frac{1}{3}, \frac{1}{12}, \frac{1}{60}, \frac{1}{360}, \ldots &= 2, \frac{2}{2}, \frac{2}{6}, \frac{2}{24}, \frac{2}{120}, \frac{2}{720}, \ldots \\ &= 2, \frac{2}{2!}, \frac{2}{3!}, \frac{2}{4!}, \frac{2}{5!}, \frac{2}{6!}, \ldots \end{aligned}$$

Step 3 of 5

Compare the sequence $2, \frac{2}{2!}, \frac{2}{3!}, \frac{2}{4!}, \frac{2}{5!}, \frac{2}{6!}, \ldots$ with the sequence $\{d_i\}$, $i = 1, 2, 3, \ldots$ gives

$$d_1 = \frac{2}{1!},\ d_2 = \frac{2}{2!},\ d_3 = \frac{2}{3!},\ d_4 = \frac{2}{4!},\ d_5 = \frac{2}{5!},\ d_6 = \frac{2}{6!}, \ldots$$

From this, obtain the generalised sequence $d_n = \frac{2}{n!}$.

Now prove that the generalisation $d_n = \frac{2}{n!}$ is true for all integers $n \geq 1$.

This can be proved by using mathematical induction on *n*.

Let the property $P(n)$ be the equation " $d_n = \frac{2}{n!}$."

Prove that $P(1)$ is true:

Let $n = 1$

Substitute $n = 1$ in $P(n)$.

$$\begin{aligned} d_1 &= \frac{2}{1!} \\ &= 2 \end{aligned}$$

Thus, the property $P(n)$ is true for $n = 1$.

Step 4 of 5

The inductive hypothesis is to assume that the property $P(n)$ is true for $n = k$.

That is, " $d_k = \frac{2}{k!}$, for all $k \geq 1$."

Then prove that the property is true for $n = k + 1$.

Let $n = k + 1$.

Step 5 of 5

By the definition of the sequence,

$$\begin{aligned} d_{k+1} &= \frac{d_k}{k+1} \\ &= \frac{\left(2/k!\right)}{(k+1)} && \text{By induction hypothesis} \\ &= \frac{2}{(k+1)k!} \\ &= \frac{2}{(k+1)!} \end{aligned}$$

Thus, the property is true for $n = k + 1$.

Hence, by the principle of mathematical induction,

$d_n = \frac{2}{n!}$, for all integers $n \geq 1$.

Chapter 5.3, Problem 28E

Problem

Prove that for every integer $n \geq 1$, $\frac{1}{3} = \frac{1+3+5+\cdots+(2n-1)}{(2n+1)(2n+3)+\cdots+(2n+(2n-1))}$.

Step-by-step solution

Step 1 of 4

Consider the following formula.

$P(n): \frac{1}{3} = \frac{1+3+5+\cdots+(2n-1)}{(2n+1)+(2n+3)+\cdots+(2n+(2n-1))}$ for every integer $n \geq 1$.

The objective is to prove the above statement is true

Step 2 of 4

Base Case: $n=1$

Obtain $P(1)$ as follows.

$$P(1): \frac{1}{3} = \frac{1+3+5+\cdots+(2(1)-1)}{(2(1)+1)+(2(1)+3)+\cdots+(2(1)+(2(1)-1))} = \frac{1}{3}$$

Thus, the base case is true for $n=1$.

Step 3 of 4

Induction hypothesis:

For every integer $k \geq 1$, if $P(k)$ is true then $P(k+1)$ is true. That is if

$P(k): \frac{1}{3} = \frac{1+3+5+\cdots+(2k-1)}{(2k+1)+(2k+3)+\cdots+(2k+(2k-1))}$, then it has to be shown that

$P(k+1): \frac{1}{3} = \frac{1+3+5+\cdots+(2(k+1)-1)}{(2(k+1)+1)+(2(k+1)+3)+\cdots+(2(k+1)+(2(k+1)-1))}$ or

equivalently $P(k+1): \frac{1}{3} = \frac{1+3+5+\cdots+(2k+1)}{(2k+3)+(2k+5)+\cdots+(4k+3)}$

Consider $P(k)$.

$$\frac{1}{3} = \frac{1+3+5+\cdots+(2k-1)}{(2k+1)+(2k+3)+\cdots+(2k+(2k-1))}$$

$$(2k+1)+(2k+3)+\cdots+(2k+(2k-1)) = 3[1+3+5+\cdots+(2k-1)]$$

Step 4 of 4

Simplify the RHS as follows.

$$\begin{aligned}
&\frac{1+3+5+\cdots+(2k+1)}{(2k+3)(2k+5)+\cdots+(4k+3)} \\
&= \frac{1+3+5+\cdots+(2k+1)}{(2k+3)(2k+5)+\cdots+(4k-1)+(4k+1)+(4k+3)} \\
&= \frac{1+3+5+\cdots+(2k+1)}{[3(1+3+5+\cdots+(2k-1))-(2k+1)]+(4k+1)+(4k+3)} [\because \text{By } P(k)] \\
&= \frac{1+3+5+\cdots+(2k+1)}{3(1+3+5+\cdots+(2k-1))-2k-1+8k+4} \\
&= \frac{1+3+5+\cdots+(2k+1)}{3(1+3+5+\cdots+(2k-1))+6k+3} \\
&= \frac{1+3+5+\cdots+(2k+1)}{3(1+3+5+\cdots+(2k-1))+3(2k+1)} \\
&= \frac{1+3+5+\cdots+(2k+1)}{3(1+3+5+\cdots+(2k-1)+(2k+1))} \\
&= \frac{1}{3}\frac{1+3+5+\cdots+(2k+1)}{(1+3+5+\cdots+(2k-1)+(2k+1))} \\
&= \frac{1}{3} \\
&= \text{LHS}
\end{aligned}$$

Thus $P(k+1)$ is true whenever $P(k)$ is true.

Hence, $P(n): \frac{1}{3} = \frac{1+3+5+\cdots+(2n-1)}{(2n+1)+(2n+3)+\cdots+(2n+(2n-1))}$ is true for all $n \geq 1$ by the principle of mathematical induction.

Chapter 5.3, Problem 29E

Problem

Use the definition of string and string length from page 13 in Section 1.4. Recursive definitions for these terms are given in Section 5.9.

A set *L* consists of strings obtained by juxtaposing one or more of *abb*, *bab*, and *bba*. Use mathematical induction to prove that for every integer $n \geq 1$, if a string *s* in *L* has length 3*n*, then *s* contains an even number of *b*'s.

Step-by-step solution

Step 1 of 3

The objective is to prove that $P(n)$ is true for every integer $n \geq 1$ using mathematical induction.

Step 2 of 3

Proof:

$P(n)$: "If a string *s* in *L* has length 3*n*, then *s* contains an even number of *b*'s."

Prove that $P(n)$ is true for every integer $n \geq 1$. For that first show that $P(1)$ are true.

$P(1)$ is true, since the strings with length 3 are *abb*, *bab* and *bba*. Observe that all these strings contains 2 b's which is even.

Now, show that for every integer $k \geq 1$, if $P(k)$ is true then $P(k+1)$ is true.

Let $k(\geq 1) \in \square$ And suppose that:

The length of string s in L is $3k$, then there are even number of *b*'s in s [Induction hypothesis]

Step 3 of 3

Show that: There are even number of *b*'s in s if length of string s in L is $3(k+1)$.

Suppose *s* is a string in L that has length $3(k+1)$.

Now $3(k+1) = 3k+3$ and the strings in *L* are obtained by juxtaposing strings already in *L* with one of *abb*, *bab*, or *bba*. Thus, either the initial or the final three characters in *s* are *abb*, *bab*, or *bba*.

By induction hypothesis the other 3*k* characters in *s* contain an even number, say *m*, of *b*'s. Because each of *abb*, *bab*, and *bba* contains 2 *b*'s, the total number of *b*'s in *s* is $m+2$, which is a sum of even integers and hence is even.

Hence Proved.

Chapter 5.3, Problem 30E

Problem

Use the definition of string and string length from page 13 in Section 1.4. Recursive definitions for these terms are given in Section 5.9.

A set *S* consists of strings obtained by juxtaposing one or more copies of 1110 and 0111. Use mathematical induction to prove that for every integer $n \geq 1$, if a string *s* in *S* has length 4*n*, then the number of 1's in *s* is a multiple of 3.

Step-by-step solution

Step 1 of 3

The objective is to prove that $P(n)$ is true for every integer $n \geq 1$ using mathematical induction.

Step 2 of 3

Proof:

$P(n)$: "If a string *s* in *S* has length 4*n*, then the number of 1's in *s* is a multiple of 3."

Prove that $P(n)$ is true for every integer $n \geq 1$. For that first show that $P(1)$ are true.

$P(1)$ is true, since the strings with length 3 are *abb*, *bab* and *bba*. Observe athat all these strings contains 2 b's which is even.

Now, show that for every integer $k \geq 1$, if $P(k)$ is true then $P(k+1)$ is true.

Let $k(\geq 1) \in \square$ And suppose that:

The length of string s in S is $4k$, then there $3x$ number of 1's in s where $3x$ is a multiple of 3 [Induction hypothesis]

Step 3 of 3

Show that: There are $3x$ number of 1's in s if length of string s in S is $4(k+1)$.

s is a string in *S* with length $4(k+1)$.

Now all the strings in *S* are obtained by juxtaposing strings of the form 1110 or 0111. Thus, since *s* has length $4(k+1) = 4k+4$, the initial or the final four characters in *s* are either 1110 or 0111.

By inductive hypothesis that the number of 1's in the other part of *s* is a multiple of 3 and, therefore, has the form 3*a* for some integer *a*. Because each of 1110 and 0111 contains three 1's, the total number of 1's in *s* is $3a+3$, which equals $3(a+1)$ and is a multiple of 3.

Hence Proved.

Exercise 1

Chapter 5, section 5.8, page 362

Discrete Mathematics with Applications
ISBN: 9781337694193

Table of contents

Solution

Verified

Step 1

1 of 7

This is a linear second-order linear homogeneous recurrence relation with constant coefficients (LSHRCC). Here $A = 2$, $B = -5$ and in particular A and B are constants with $B \neq 0$.

(a) $a_k = 2a_{k-1} - 5a_{k-2}$

Step 2

2 of 7

This is not an LSHRCC because b_{k-1} is not multiplied by a constant; the coefficient changes with each k.

(b) $b_k = kb_{k-1} + b_{k-2}$

Step 3

3 of 7

This is not an LSHRCC because c_{k-2} is squared and multiplied by c_{k-1}. LSHRCC relations are of the form $Aa_{k-1} + Ba_{k-2}$ for constants A and B with $B \neq 0$.

(c) $c_k = 3c_{k-1} \cdot c_{k-2}^2$

Step 4

4 of 7

This is an LSHRCC with $A = 3$ and $B = 1$.

(d) $d_k = 3d_{k-1} + d_{k-2}$

Step 5

5 of 7

This is not an LSHRCC because it has a constant term -2

(e) $r_k = r_{k-1} - r_{k-2} - 2$

Step 6

6 of 7

This is an LSHRCC. They are of the form $Aa_{k-1} + Ba_{k-2}$ with A and B constant and $B \neq 0$ so A can be 0.

(f) $s_k = 10s_{k-2}$

Result

7 of 7

(a), (d) and (f)

Exercise 54 Exercise 2

Exercise 2

Chapter 5, section 5.8, page 362

Discrete Mathematics with Applications

ISBN: 9781337694193

Table of contents

Solution

Verified

Step 1

1 of 2

a. No. Coefficients are not constant. b. Yes. A = -1 and B = 7. c. No. Not homogeneous because there is a constant term. d. No. Not linear because of the d^2. e. No. Not second order because of the k-3 degree. f. Yes. A = 1 and B = 10

Result

2 of 2

B and F.

Exercise 1 Exercise 3

Exercise 3

Chapter 5, section 5.8, page 363

Discrete Mathematics with Applications
ISBN: 9781337694193
Table of contents

Solution

Verified

Step 1

1 of 3

Given:

$$a_n = C \cdot 2^n + D$$

(a)

$$a_0 = 1$$

$$a_1 = 3$$

- Let us first evaluate $a_n = C \cdot 2^n + D$ at $n = 0$ and $n = 1$

$$a_0 = C \cdot 2^0 + D = C \cdot 1 + D = C + D$$
$$a_1 = C \cdot 2^1 + D = C \cdot 2 + D = 2C + D$$

Since $a_0 = 1$ and $a_1 = 3$, we then obtain the following two equations:

$$C + D = 1$$
$$2C + D = 3$$

Subtract the first equation from the second equation:

$$(2C + D) - (C + D) = 3 - 1$$
$$2C + D - C - D = 2 \quad \text{Distributive property}$$
$$C = 2 \quad \text{Combine like terms}$$

We have determined C. We can then use this value in the equation $C + D = 1$ to determine D.

$$C + D = 1$$
$$2 + D = 1 \quad C = 2$$
$$2 + D - 2 = 1 - 2 \quad \text{Subtract 2 from each side}$$
$$D = -1 \quad \text{Combine like terms}$$

Thus we have then obtain $C = 2$ and $D = -1$.

$$a_n = C \cdot 2^n + D = 2 \cdot 2^n + (-1) = 2^{n+1} - 1$$

- Evaluate at $n = 2$:

$$a_2 = 2^{2+1} - 1 = 2^3 - 1 = 8 - 1 = 7$$

Step 2

2 of 3

(b)

$$a_0 = 0$$

$$a_1 = 2$$

- Let us first evaluate $a_n = C \cdot 2^n + D$ at $n = 0$ and $n = 1$

$$a_0 = C \cdot 2^0 + D = C \cdot 1 + D = C + D$$
$$a_1 = C \cdot 2^1 + D = C \cdot 2 + D = 2C + D$$

Since $a_0 = 0$ and $a_1 = 2$, we then obtain the following two equations:

$$C + D = 0$$
$$2C + D = 2$$

Subtract the first equation from the second equation:

$$(2C + D) - (C + D) = 2 - 0$$
$$2C + D - C - D = 2 \quad \text{Distributive property}$$
$$C = 2 \quad \text{Combine like terms}$$

We have determined C. We can then use this value in the equation $C + D = 0$ to determine D.

$$C + D = 0$$
$$2 + D = 0 \quad C = 2$$
$$2 + D - 2 = 0 - 2 \quad \text{Subtract 2 from each side}$$
$$D = -2 \quad \text{Combine like terms}$$

Thus we have then obtain $C = 2$ and $D = -2$.

$$a_n = C \cdot 2^n + D = 2 \cdot 2^n + (-2) = 2^{n+1} - 2$$

- Evaluate at $n = 2$:

$$a_2 = 2^{2+1} - 2 = 2^3 - 2 = 8 - 2 = 6$$

Result

3 of 3

(a) $C = 2, D = -1, a_2 = 7$

(b) $C = 2, D = -2, a_2 = 6$

Exercise 2 Exercise 4

Exercise 4

Chapter 5, section 5.8, page 363

Discrete Mathematics with Applications
ISBN: 9781337694193

Table of contents

Solution

Verified

Step 1

1 of 3

Given:

$$b_n = C \cdot 3^n + D \cdot (-2)^n$$

(a)

$$b_0 = 0$$

$$b_1 = 5$$

- Let us first evaluate $b_n = C \cdot 3^n + D \cdot (-2)^n$ at $n = 0$ and $n = 1$

$$\begin{aligned} b_0 &= C \cdot 3^0 + D \cdot (-2)^0 = C \cdot 1 + D \cdot 1 = C + D \\ b_1 &= C \cdot 3^1 + D \cdot (-2)^1 = C \cdot 3 + D \cdot (-2) = 3C - 2D \end{aligned}$$

Since $b_0 = 0$ and $b_1 = 5$, we then obtain the following two equations:

$$\begin{aligned} C + D &= 0 \\ 3C - 2D &= 5 \end{aligned}$$

Add twice the first equation with the second equation:

$$\begin{aligned} 2(C + D) + (3C - 2D) &= 2 \cdot 0 + 5 \\ 2C + 2D + 3C - 2D &= 0 + 5 && \text{Distributive property} \\ 5C &= 5 && \text{Combine like terms} \\ C &= 1 && \text{Divide each side by 5} \end{aligned}$$

We have determined C. We can then use this value in the equation $C + D = 0$ to determine D.

$$\begin{aligned} C + D &= 0 \\ 1 + D &= 0 && C = 1 \\ 1 + D - 1 &= 0 - 1 && \text{Subtract 1 from each side} \\ D &= -1 && \text{Combine like terms} \end{aligned}$$

Thus we have then obtain $C = 1$ and $D = -1$.

$$b_n = C \cdot 3^n + D \cdot (-2)^n = 1 \cdot 3^n + (-1) \cdot (-2)^n = 3^n - (-2)^n$$

- Evaluate at $n = 2$:

$$b_2 = 3^2 - (-2)^2 = 9 - 4 = 5$$

Step 2

2 of 3

(b)

$$b_0 = 3$$

$$b_1 = 4$$

- Let us first evaluate $b_n = C \cdot 3^n + D \cdot (-2)^n$ at $n = 0$ and $n = 1$

$$\begin{aligned} b_0 &= C \cdot 3^0 + D \cdot (-2)^0 = C \cdot 1 + D \cdot 1 = C + D \\ b_1 &= C \cdot 3^1 + D \cdot (-2)^1 = C \cdot 3 + D \cdot (-2) = 3C - 2D \end{aligned}$$

Since $b_0 = 3$ and $b_1 = 4$, we then obtain the following two equations:

$$\begin{aligned} C + D &= 3 \\ 3C - 2D &= 4 \end{aligned}$$

Add twice the first equation with the second equation:

$$\begin{aligned} 2(C + D) + (3C - 2D) &= 2 \cdot 3 + 4 \\ 2C + 2D + 3C - 2D &= 6 + 4 && \text{Distributive property} \\ 5C &= 10 && \text{Combine like terms} \\ C &= 2 && \text{Divide each side by 5} \end{aligned}$$

We have determined C. We can then use this value in the equation $C + D = 3$ to determine D.

$$\begin{aligned} C + D &= 3 \\ 2 + D &= 3 && C = 2 \\ 2 + D - 2 &= 3 - 2 && \text{Subtract 1 from each side} \\ D &= 1 && \text{Combine like terms} \end{aligned}$$

Thus we have then obtain $C = 2$ and $D = 1$.

$$b_n = C \cdot 3^n + D \cdot (-2)^n = 2 \cdot 3^n + 1 \cdot (-2)^n = 2 \cdot 3^n + (-2)^n$$

- Evaluate at $n = 2$:

$$b_2 = 2 \cdot 3^2 + (-2)^2 = 2 \cdot 9 + 4 = 18 + 4 = 22$$

Result

3 of 3

(a) $C = 1$, $D = -1$, $b_2 = 5$

(b) $C = 2$, $D = 1$, $b_2 = 22$

Exercise 3 Exercise 5

Exercise 5

Chapter 5, section 5.8, page 363

Discrete Mathematics with Applications
ISBN: 9781337694193

Table of contents

Solution

Verified

Step 1

1 of 2

Given: $a_n = C \cdot 2^n + D$ for all integers $n \geq 0$, C and D are real numbers

To proof: $a_k = 3a_{k-1} - 2a_{k-2}$ for all integers $k \geq 2$

PROOF

Let k be an integer such that $k \geq 2$.

$$\begin{aligned}
3a_{k-1} - 2a_{k-2} &= 3(C \cdot 2^{k-1} + D) - 2(C \cdot 2^{k-2} + D) && a_n = C \cdot 2^n + D \\
&= 3C \cdot 2^{k-1} + 3D - 2C \cdot 2^{k-2} - 2D && \text{Distributive property} \\
&= 3C \cdot 2 \cdot 2^{k-2} + 3D - 2C \cdot 2^{k-2} - 2D \\
&= 6C \cdot 2^{k-2} + 3D - 2C \cdot 2^{k-2} - 2D \\
&= (6C - 2C) \cdot 2^{k-2} + (3-2)D && \text{Combine like terms} \\
&= 4C \cdot 2^{k-2} + D \\
&= C \cdot 2^2 \cdot 2^{k-2} + D && 4 = 2^2 \\
&= C \cdot 2^{2+k-2} + D \\
&= C \cdot 2^k + D && \text{Combine like terms} \\
&= a_k && a_n = C \cdot 2^n + D
\end{aligned}$$

Thus we have shown $a_k = 3a_{k-1} - 2a_{k-2}$.

$\square$

Result

2 of 2

$a_k = 3a_{k-1} - 2a_{k-2}$ for all integers $k \geq 2$

Exercise 4 Exercise 6

Exercise 6

Chapter 5, section 5.8, page 363

Discrete Mathematics with Applications
ISBN: 9781337694193

Table of contents

Solution

Verified

Step 1

1 of 2

Given: $b_n = C \cdot 3^n + D \cdot (-2)^n$ for all integers $n \geq 0$, C and D are real numbers

To proof: $b_k = b_{k-1} + 6b_{k-2}$ for all integers $k \geq 2$

PROOF

Let k be an integer such that $k \geq 2$.

$$\begin{aligned}
b_{k-1} + 6b_{k-2} &= (C \cdot 3^{k-1} + D \cdot (-2)^{k-1}) + 6(C \cdot 3^{k-2} + D \cdot (-2)^{k-2}) && b_n = C \cdot 3^n + D \cdot (-2)^n \\
&= C \cdot 3^{k-1} + D \cdot (-2)^{k-1} + 6C \cdot 3^{k-2} + 6D \cdot (-2)^{k-2} && \text{Distributive property} \\
&= C \cdot 3 \cdot 3^{k-2} + D \cdot (-2) \cdot (-2)^{k-2} + 6C \cdot 3^{k-2} + 6D \cdot (-2)^{k-2} \\
&= 3C \cdot 3^{k-2} - 2D \cdot (-2)^{k-2} + 6C \cdot 3^{k-2} + 6D \cdot (-2)^{k-2} \\
&= (3C + 6C) \cdot 3^{k-2} + (-2D + 6D) \cdot (-2)^{k-2} && \text{Combine like terms} \\
&= 9C \cdot 3^{k-2} + 4D \cdot (-2)^{k-2} \\
&= C \cdot 3^2 \cdot 3^{k-2} + D \cdot (-2)^2 \cdot (-2)^{k-2} && 9 = 3^2 \text{ and } 4 = (-2)^2 \\
&= C \cdot 3^{2+k-2} + D \cdot (-2)^{2+k-2} \\
&= C \cdot 3^k + D \cdot (-2)^k && \text{Combine like terms} \\
&= b_k && b_n = C \cdot 3^n + D \cdot (-2)^n
\end{aligned}$$

Thus we have shown $b_k = b_{k-1} + 6b_{k-2}$.

$\square$

Result

2 of 2

$b_k = b_{k-1} + 6b_{k-2}$ for all integers $k \geq 2$

Exercise 5 Exercise 7

Exercise 7

Chapter 5, section 5.8, page 363

Discrete Mathematics with Applications
ISBN: 9781337694193

Table of contents

Solution

Verified

Step 1

1 of 4

Given system of equations:

$$C + D = 1$$
$$C\left(\frac{1+\sqrt{5}}{2}\right) + D\left(\frac{1-\sqrt{5}}{2}\right) = 1$$

Multiply each side of the first equation by $-\left(\frac{1+\sqrt{5}}{2}\right)$:

$$-\left(\frac{1+\sqrt{5}}{2}\right)(C+D) = -\left(\frac{1+\sqrt{5}}{2}\right)(1)$$
$$C\left(\frac{1+\sqrt{5}}{2}\right) + D\left(\frac{1-\sqrt{5}}{2}\right) = 1$$

Use the distributive property and simplify:

$$-C\left(\frac{1+\sqrt{5}}{2}\right) - D\left(\frac{1+\sqrt{5}}{2}\right) = -\frac{1+\sqrt{5}}{2}$$
$$C\left(\frac{1+\sqrt{5}}{2}\right) + D\left(\frac{1-\sqrt{5}}{2}\right) = 1$$

Add the previous two equations:

Step 2

2 of 4

$$-C\left(\frac{1+\sqrt{5}}{2}\right) - D\left(\frac{1+\sqrt{5}}{2}\right) + C\left(\frac{1+\sqrt{5}}{2}\right) + D\left(\frac{1-\sqrt{5}}{2}\right) = -\frac{1+\sqrt{5}}{2} + 1$$
$$D\left(\frac{1-\sqrt{5}}{2} - \frac{1+\sqrt{5}}{2}\right) = -\frac{1+\sqrt{5}}{2} + \frac{2}{2} \qquad \text{Combine li}$$
$$D\left(\frac{1-\sqrt{5}-1-\sqrt{5}}{2}\right) = \frac{-(1+\sqrt{5})+2}{2}$$
$$D\left(\frac{-2\sqrt{5}}{2}\right) = \frac{(-1+2)-\sqrt{5}}{2}$$
$$D\left(-\sqrt{5}\right) = \frac{1-\sqrt{5}}{2}$$
$$D = \frac{1-\sqrt{5}}{-2\sqrt{5}} \qquad \text{Divide each side}$$
$$D = \frac{-(1-\sqrt{5})}{2\sqrt{5}}$$

Step 3

3 of 4

We have found an expression for D. We can then use this expression and the equation $C + D = 1$ to obtain an expression for C:

$$C + D = 1$$
$$C + \frac{-(1-\sqrt{5})}{2\sqrt{5}} = 1 \qquad D = \frac{-(1-\sqrt{5})}{2\sqrt{5}}$$
$$C = 1 - \frac{-(1-\sqrt{5})}{2\sqrt{5}} \qquad \text{Subtract } \frac{-(1-\sqrt{5})}{2\sqrt{5}} \text{ from each side}$$
$$= \frac{2\sqrt{5}}{2\sqrt{5}} + \frac{1-\sqrt{5}}{2\sqrt{5}}$$
$$= \frac{2\sqrt{5}+1-\sqrt{5}}{2\sqrt{5}}$$
$$= \frac{1+\sqrt{5}}{2\sqrt{5}} \qquad \text{Combine like terms}$$

Result

4 of 4

$$C = \frac{1+\sqrt{5}}{2\sqrt{5}} \text{ and } D = \frac{-(1-\sqrt{5})}{2\sqrt{5}}$$

Exercise 6 Exercise 8

Exercise 8

Chapter 5, section 5.8, page 363

Discrete Mathematics with Applications
ISBN: 9781337694193

Table of contents

Solution

Verified

Step 1

1 of 4

Given:

$$\begin{aligned} a_k &= 2a_{k-1} + 3a_{k-2} \text{ for all integers } k \geq 2 \\ a_0 &= 1 \\ a_1 &= 2 \end{aligned}$$

(a) $1, t, t^2, t^3, \ldots, t^n, \ldots$ satisfies the sequence.

Lemma 5.8.1 A recurrence relation of the form $a_k = Aa_{k-1} + Ba_{k-2}$ for all integers $k \geq 2$ is satisfied by the sequence $1, t, t^2, \ldots, t^n, \ldots$ if and only if t satisfies the equation $t^2 - At - B = 0$ (t is a nonzero real number).

In this case: $A = 2$ and $B = 3$. We then know that t needs to satisfy the characteristic equation $t^2 - At - B = 0$ for these values of A and B.

$$\begin{aligned} t^2 - At - B &= 0 \\ t^2 - 2t - 3 &= 0 && A = 2 \text{ and } B = 3 \\ t^2 + t - 3t - 3 &= 0 && -2t = t - 3t \\ t(t+1) - 3(t+1) &= 0 && \text{Distributive property} \\ (t-3)(t+1) &= 0 && \text{Distributive property} \\ t - 3 = 0 \text{ or } t + 1 &= 0 && \text{Zero product property} \\ t = 3 \text{ or } t &= -1 && \text{Solve each equation to } t \end{aligned}$$

Step 2

2 of 4

(b) In part (a), we determined that the two roots of the characteristic equation are $r = -1$ and $s = 3$.

Since the roots are distinct, the explicit formula of the sequence is $a_n = Cr^n + Ds^n$ by the **Distinct-Roots Theorem**.

$$\begin{aligned} a_n &= Cr^n + Ds^n \\ &= C \cdot (-1)^n + D \cdot 3^n && r = -1 \text{ and } s = 3 \end{aligned}$$

We can determine the constants C and D by using the initial conditions $a_0 = 1$ and $a_1 = 2$.

$$\begin{aligned} a_0 &= C \cdot (-1)^0 + D \cdot 3^0 = C \cdot 1 + D \cdot 1 = C + D \\ a_1 &= C \cdot (-1)^1 + D \cdot 3^1 = C \cdot (-1) + D \cdot 3 = -C + 3D \end{aligned}$$

Since $a_0 = 1$ and $a_1 = 2$:

$$\begin{aligned} C + D &= 1 \\ -C + 3D &= 2 \end{aligned}$$

Add the two equations:

$$\begin{aligned} C + D - C + 3D &= 1 + 2 \\ 4D &= 3 && \text{Combine like terms} \\ D &= \frac{3}{4} && \text{Divide each side by 4} \end{aligned}$$

We have determine D. We can then determine C using the known values of D and the equation $C + D = 1$.

$$\begin{aligned} C + D &= 1 \\ C + \frac{3}{4} &= 1 && D = \frac{3}{4} \\ C &= 1 - \frac{3}{4} && \text{Subtract } \frac{3}{4} \text{ from each side} \\ C &= \frac{1}{4} \end{aligned}$$

Step 3

3 of 4

Since the general solution was $a_n = C \cdot (-1)^n + D \cdot 3^n$, we then obtain:

$$a_n = C \cdot (-1)^n + D \cdot 3^n = \frac{1}{4} \cdot (-1)^n + \frac{3}{4} \cdot 3^n$$

Result

4 of 4

(a) $t = -1$ and $t = 3$

(b) $a_n = \frac{1}{4} \cdot (-1)^n + \frac{3}{4} \cdot 3^n$

Exercise 7 Exercise 9

Exercise 9

Chapter 5, section 5.8, page 363

Discrete Mathematics with Applications
ISBN: 9781337694193

Table of contents

Solution

Verified

Step 1

1 of 2

(a)\ If, for each $k \geq 2$,

$$t^k = 7t^{k-1} - 10t^{k-2} \text{ when } t \neq 0$$

then $t^2 = 7t - 10$ $[by\ dividing\ by\ t^{k-2}]$, and so

$$t^2 - 7t + 10 = 0$$

Factoring above equation gives

$$t^2 - 7t + 10 = (t-2)(t-5) = 0$$

Therefore, all the possible values of t are $t = 2$ or $t = 5$.

(b)\ From the above part and by the distinct roots theorem, It follows that for some constants C and D, $b_0, b_1, b_2,\ldots$ satisfies the equation

$$b_n = C \cdot 2^n + D \cdot 5^n$$

for every integer $n \geq 0$.

Substituting the initial conditions $b_0 = b_1 = 2$ in the above equation gives

$$\begin{aligned} C + D &= 2 \qquad (1) \\ 2C + 5D &= 2 \qquad (2) \end{aligned}$$

Solving (1) and (2) gives $C = \frac{8}{3}$ and $D = -\frac{2}{3}$.

Therefore, the explicit formula for the sequence satisfying the given initial conditions as well as the recurrence relation is

$$b_n = \frac{8}{3} \cdot 2^n + \left(-\frac{2}{3}\right) \cdot 5^n$$

or equivalently

$$b_n = \frac{1}{3}\left(2^{n+3} - 2 \cdot 5^n\right)$$

Result

2 of 2

(a)\ $t = 2$ or $t = 5$

(b)\ $b_n = \frac{1}{3}\left(2^{n+3} - 2 \cdot 5^n\right)$

Exercise 8 Exercise 10

Exercise 10

Chapter 5, section 5.8, page 363

Discrete Mathematics with Applications
ISBN: 9781337694193

Table of contents

Solution

Verified

Step 1

1 of 2

(a)\ If, for each $k \geq 2$,

$$t^k = t^{k-1} + 6t^{k-2} \text{ when } t \neq 0$$

then $t^2 = t + 6$ $[by\ dividing\ by\ t^{k-2}]$, and so

$$t^2 - t - 6 = 0$$

Factoring above equation gives

$$t^2 - t - 6 = (t-3)(t+2) = 0$$

Therefore, all the possible values of t are $t = -2$ or $t = 3$.

(b)\ From the above part and by the distinct roots theorem, It follows that for some constants C and D, $c_0, c_1, c_2,\ldots$ satisfies the equation

$$c_n = C \cdot (-2)^n + D \cdot 3^n$$

for every integer $n \geq 0$.

Substituting the initial conditions $c_0 = 0$ and $c_1 = 3$ in the above equation gives

$$\begin{aligned} C + D &= 0 \qquad (1) \\ -2C + 3D &= 3 \qquad (2) \end{aligned}$$

Solving (1) and (2) gives $C = -\frac{3}{5}$ and $D = \frac{3}{5}$.

Therefore, the explicit formula for the sequence satisfying the given initial conditions as well as the recurrence relation is

$$c_n = \left(-\frac{3}{5}\right) \cdot (-2)^n + \left(\frac{3}{5}\right) \cdot 3^n$$

or equivalently

$$c_n = -\frac{3}{5}\left((-2)^n - 3^n\right)$$

Result

2 of 2

(a)\ $t = -2$ or $t = 3$

(b)\ $c_n = -\frac{3}{5}\left((-2)^n - 3^n\right)$

Exercise 9 Exercise 11

Exercise 11

Chapter 5, section 5.8, page 363

Discrete Mathematics with Applications
ISBN: 9781337694193

Table of contents

Solution

Verified

Step 1

1 of 4

Given:

$$d_k = 4d_{k-2} \text{ for all integers } k \geq 2$$
$$d_0 = 1$$
$$d_1 = 2$$

In general: $a_n = Aa_{n-1} + Ba_{n-2}$

$$A = 0$$
$$B = 4$$

We first determine the roots of the characteristic equation $t^2 - At - B$ for these values of A and B.

$$\begin{aligned} t^2 - At - B &= 0 \\ t^2 - 0t - 4 &= 0 && A = 0 \text{ and } B = 4 \\ t^2 - 4 &= 0 \\ (t-2)(t+2) &= 0 && a^2 - b^2 = (a-b)(a+b) \\ t - 2 = 0 \text{ or } t + 2 &= 0 && \text{Zero product property} \\ t = 2 \text{ or } t &= -2 && \text{Solve each equation to } t \end{aligned}$$

Thus the two roots of the characteristic equation are $r = -2$ and $s = 2$.

Step 2

2 of 4

Since the roots are distinct, the explicit formula of the sequence is $a_n = Cr^n + Ds^n$ by the **Distinct-Roots Theorem**.

$$\begin{aligned} d_n &= Cr^n + Ds^n \\ &= C \cdot (-2)^n + D \cdot 2^n && r = -2 \text{ and } s = 2 \end{aligned}$$

We can determine the constants C and D by using the initial conditions $d_0 = 1$ and $d_1 = -1$.

$$\begin{aligned} d_0 &= C \cdot (-2)^0 + D \cdot 2^0 = C \cdot 1 + D \cdot 1 = C + D \\ d_1 &= C \cdot (-2)^1 + D \cdot 2^1 = C \cdot (-2) + D \cdot 2 = -2C + 2D \end{aligned}$$

Since $d_0 = 1$ and $d_1 = -1$:

$$\begin{aligned} C + D &= 1 \\ -2C + 2D &= -1 \end{aligned}$$

Add twice the first equation to the second equation:

$$\begin{aligned} 2(C + D) - 2C + 2D &= 2 \cdot 1 - 1 \\ 2C + 2D - 2C + 2D &= 2 - 1 && \text{Distributive property} \\ 4D &= 1 && \text{Combine like terms} \\ D &= \frac{1}{4} && \text{Divide each side by } 4 \end{aligned}$$

We have determine D. We can then determine C using the known values of D and the equation $C + D = 1$.

$$\begin{aligned} C + D &= 1 \\ C + \frac{1}{4} &= 1 && D = \frac{1}{4} \\ C &= 1 - \frac{1}{4} && \text{Subtract } \frac{1}{4} \text{ from each side} \\ C &= \frac{3}{4} \end{aligned}$$

Step 3

3 of 4

Since the general solution was $d_n = C \cdot (-2)^n + D \cdot 2^n$, we then obtain:

$$d_n = C \cdot (-2)^n + D \cdot 2^n = \frac{3}{4} \cdot (-2)^n + \frac{1}{4} \cdot 2^n$$

Result

4 of 4

$$d_n = \frac{3}{4} \cdot (-2)^n + \frac{1}{4} \cdot 2^n \text{ for all integers } n \geq 0$$

Exercise 10 Exercise 12

Exercise 12

Chapter 5, section 5.8, page 363

Discrete Mathematics with Applications
ISBN: 9781337694193
Table of contents

Solution Verified

$e_k = 9\, e_{k-2}$ for all integers $k \geq 2$.

$e_0 = 0,\ e_1 = 2.$

This is a second-order linear homogeneous recurrence relation. The characteristic equation is given by,

$$t^2 - 9 = 0 \Rightarrow \boxed{t = \pm 3} \quad \ldots \text{(Distinct roots)}$$

By distinct roots theorem,

$$e_n = C \cdot 3^n + D(-3)^n \quad \text{for all integers } n \geq 0.$$

By intial conditions: $e_0 = 0,\ e_1 = 2.$

$$C + D = 0 \quad -(1)$$
$$3C - 3D = 2 \quad -(2)$$

Put $C = -D$ in eqn (2), we get,

$$-3D - 3D = 2 \Rightarrow -6D = 2 \Rightarrow \boxed{D = \frac{-1}{3}}$$

From (1), $\boxed{C = \frac{1}{3}}$.

Therefore, the explicit formula for the sequence satisfying the recurrence relation and the initial conditions,

$$e_n = \frac{3^n}{3} + \left(\frac{-1}{3}\right) \cdot (-3)^n$$

$$\Rightarrow e_n = 3^{n-1} + (-3)^{n-1} \quad \text{for all integers } n \geq 0.$$

Exercise 11 Exercise 13

Exercise 13

Chapter 5, section 5.8, page 363

Discrete Mathematics with Applications
ISBN: 9781337694193

Table of contents

Solutions

Verified

Solution A Solution B

Step 1

1 of 3

Given:

$$r_k = 2r_{k-1} - r_{k-2} \text{ for all integers } k \geq 2$$
$$r_0 = 1$$
$$r_1 = 4$$

In general: $r_n = Ar_{n-1} + Br_{n-2}$

$$A = 2$$

$$B = -1$$

We first determine the roots of the characteristic equation $t^2 - At - B$ for these values of A and B.

$$\begin{aligned} t^2 - At - B &= 0 \\ t^2 - 2t - (-1) &= 0 && A = 2 \text{ and } B = -1 \\ t^2 - 2t + 1 &= 0 \\ (t-1)^2 &= 0 && (a-b)^2 = a^2 - 2ab + b^2 \\ t - 1 &= 0 && \text{Zero product property} \\ t &= 1 && \text{Add 1 to each side} \end{aligned}$$

Thus the root of the characteristic equation is $r = 1$.

Step 2

2 of 3

Since the roots are distinct, the explicit formula of the sequence is $r_n = Cr^n + Dnr^n$ by the **Single-Root Theorem**.

$$\begin{aligned} r_n &= Cr^n + Dnr^n \\ &= C \cdot 1^n + D \cdot n \cdot 1^n && r = 1 \\ &= C \cdot 1 + D \cdot n \cdot 1 \\ &= C + Dn \end{aligned}$$

We can determine the constants C and D by using the initial conditions $r_0 = 1$ and $r_1 = 4$.

$$r_0 = C + D \cdot 0 = C + 0 = C$$
$$r_1 = C + D \cdot 1 = C + D$$

Since $r_0 = 1$ and $r_1 = 4$:

$$C = 1$$
$$C + D = 4$$

By the first equation, we know $C = 1$

$$\begin{aligned} C + D &= 4 \\ 1 + D &= 4 && C = 1 \\ 1 - D - 1 &= 4 - 1 && \text{Subtract 1 from each side} \\ D &= 3 && \text{Combine like terms} \end{aligned}$$

Since the general solution was $r_n = C + Dn$ and since $C = 1$ and $D = 3$, we then obtain:

$$r_n = C + Dn = 1 + 3n$$

Result

3 of 3

$$r_n = 1 + 3n \text{ for all integers } n \geq 0$$

Exercise 12 Exercise 14

Exercise 13

Chapter 5, section 5.8, page 363

Discrete Mathematics with Applications
ISBN: 9781337694193

Table of contents

Solutions

Verified

Solution A Solution B

$r_k = 2r_{k-1} - r_{k-2}$ for all integers $k \geq 2$.
$r_0 = 1, r_1 = 4$.

This is a second-order homogeneous linear recurrence relation. The characteristic equation is given by,

$$t^2 - 2t + 1 = 0$$
$$(t-1)^2 = 0 \Rightarrow \boxed{t=1}$$

The characteristic equation has single root $t=1$. By single-root theorem,

$$r_n = C(1)^n + Dn(1)^n$$

i.e $r_n = C + nD$ for all integers $n \geq 0$.

Initial Conditions: $r_0 = 1$, $r_1 = 4$

$$\Rightarrow C = 1, \quad C + D = 4 \Rightarrow D = 3.$$

$$\therefore r_n = C + nD = 1 + 3n.$$

So, the explicit formula of the sequence satisfying the recurrence relation and the initial conditions is,

$r_n = 1 + 3n$ for all integers $n \geq 0$.

Exercise 12 Exercise 14

Exercise 14

Chapter 5, section 5.8, page 363

Discrete Mathematics with Applications
ISBN: 9781337694193
Table of contents

Solution

Verified

Step 1

1 of 3

Given:

$$s_k = -4s_{k-1} - 4s_{k-2} \text{ for all integers } k \geq 2$$
$$s_0 = 0$$
$$s_1 = -1$$

In general: $s_n = As_{n-1} + Bs_{n-2}$

$$A = -4$$

$$B = -4$$

We first determine the roots of the characteristic equation $t^2 - At - B$ for these values of A and B.

$$\begin{aligned} t^2 - At - B &= 0 \\ t^2 - (-4)t - (-4) &= 0 && A = -4 \text{ and } B = -4 \\ t^2 + 4t + 4 &= 0 \\ (t+2)^2 &= 0 && (a+b)^2 = a^2 + 2ab + b^2 \\ t + 2 &= 0 && \text{Zero product property} \\ t &= -2 && \text{Add 1 to each side} \end{aligned}$$

Thus the root of the characteristic equation is $r = -2$.

Step 2

2 of 3

Since the roots are distinct, the explicit formula of the sequence is $s_n = Cr^n + Dnr^n$ by the **Single-Root Theorem**.

$$\begin{aligned} s_n &= Cr^n + Dnr^n \\ &= C \cdot (-2)^n + D \cdot n \cdot (-2)^n && r = 2 \end{aligned}$$

We can determine the constants C and D by using the initial conditions $s_0 = 0$ and $s_1 = -1$.

$$\begin{aligned} s_0 &= C \cdot (-2)^0 + D \cdot 0 \cdot (-2)^0 = C \cdot 1 + 0 = C \\ s_1 &= C \cdot (-2)^1 + D \cdot 1 \cdot (-2)^1 = C \cdot (-2) + D \cdot (-2) = -2C - 2D \end{aligned}$$

Since $s_0 = 0$ and $s_1 = -1$:

$$C = 0$$
$$-2C - 2D = -1$$

By the first equation, we know $C = 0$

$$\begin{aligned} -2C - 2D &= -1 \\ -2 \cdot 0 - 2D &= -1 && C = 0 \\ -2D &= -1 \\ D &= \frac{1}{2} && \text{Divide each side by 2} \end{aligned}$$

Since the general solution was $s_n = C \cdot 2^n + D \cdot n \cdot 2^n$ and since $C = 0$ and $D = -\frac{1}{2}$, we then obtain:

$$s_n = C \cdot 2^n + D \cdot n \cdot 2^n = 0 \cdot (-2)^n + \frac{1}{2} \cdot n \cdot (-2)^n = \frac{1}{2} \cdot n \cdot (-2)^n = -n(-2)^{n-1}$$

Result

3 of 3

$$s_n = -n(-2)^{n-1} \text{ for all integers } n \geq 0$$

Exercise 13 Exercise 15

Exercise 15

Chapter 5, section 5.8, page 363

Discrete Mathematics with Applications
ISBN: 9781337694193

Table of contents

Solution

Verified

Step 1

1 of 2

The characteristic equation is given by

$$t^2 - 6t + 9 = 0$$

Factoring above equation gives

$$\begin{aligned} t^2 - 6t + 9 &= 0 \\ (t-3)(t-3) &= 0 \\ (t-3)^2 &= 0 \\ t &= 3 \end{aligned}$$

We see that the equation has a single root. By the single root theorem, it follows that, for some constants C and D, $t_0, t_1, t_2,\ldots$ satisfies the equation

$$t_n = C \cdot 3^n + Dn \cdot 3^n$$

for every integer $n \geq 0$.

Substituting the initial conditions $t_0 = 1$ and $t_1 = 3$ in the equation gives

$$\begin{aligned} C &= 1 && (1) \\ 3C + 3D &= 3 && (2) \end{aligned}$$

Substituting the value of C from (1) in (2) gives $D = 0$.

Therefore, the explicit formula for the sequence satisfying the given initial conditions as well as the recurrence relation is

$$t_n = 3^n$$

Result

2 of 2

$$t_n = 3^n$$

Exercise 14 Exercise 16

Exercise 16

Chapter 5, section 5.8, page 363

Discrete Mathematics with Applications
ISBN: 9781337694193
Table of contents

Solutions

Verified

Solution A Solution B

Step 1

1 of 4

Given:

$$s_k = 2s_{k-1} + 2s_{k-2} \text{ for all integers } k \geq 2$$
$$s_0 = 1$$
$$s_1 = 3$$

In general: $s_n = As_{n-1} + Bs_{n-2}$

$$A = 2$$
$$B = 2$$

We first determine the roots of the characteristic equation $t^2 - At - B$ for these values of A and B.

$$\begin{aligned} t^2 - At - B &= 0 \\ t^2 - 2t - 2 &= 0 \\ t &= \frac{-(-2) \pm \sqrt{(-2)^2 - 4(1)(-2)}}{2 \cdot 1} && \text{Use quadratic formula } t = \frac{-b \pm \sqrt{b^2 - 4ac}}{2a} \quad A = 2 \text{ and } B = 2 \\ &= \frac{2 \pm \sqrt{12}}{2} \\ &= \frac{2 \pm 2\sqrt{3}}{2} \\ &= 1 \pm \sqrt{3} \end{aligned}$$

Thus the two roots of the characteristic equation are $r = 1 + \sqrt{3}$ and $s = 1 - \sqrt{3}$.

Step 2

2 of 4

Since the roots are distinct, the explicit formula of the sequence is $s_n = Cr^n + Ds^n$ by the **Distinct-Roots Theorem**.

$$\begin{aligned} s_n &= Cr^n + Ds^n \\ &= C \cdot (1 + \sqrt{3})^n + D \cdot (1 - \sqrt{3})^n \quad r = 1 + \sqrt{3} \text{ and } s = 1 - \sqrt{3} \end{aligned}$$

We can determine the constants C and D by using the initial conditions $s_0 = 1$ and $s_1 = 3$.

$$\begin{aligned} s_0 &= C \cdot (1 + \sqrt{3})^0 + D \cdot (1 - \sqrt{3})^0 = C \cdot 1 + D \cdot 1 = C + D \\ s_1 &= C \cdot (1 + \sqrt{3})^1 + D \cdot (1 - \sqrt{3})^1 = C \cdot (1 + \sqrt{3}) + D \cdot (1 - \sqrt{3}) \end{aligned}$$

Since $s_0 = 1$ and $s_1 = 3$:

$$\begin{aligned} C + D &= 1 \\ C \cdot (1 + \sqrt{3}) + D \cdot (1 - \sqrt{3}) &= 3 \end{aligned}$$

Multiply the first equation by $-(1 + \sqrt{3})$:

$$\begin{aligned} -C \cdot (1 + \sqrt{3}) - D \cdot (1 + \sqrt{3}) &= -(1 + \sqrt{3}) \\ C \cdot (1 + \sqrt{3}) + D \cdot (1 - \sqrt{3}) &= 3 \end{aligned}$$

Add the two equations:

$$\begin{aligned} -C \cdot (1 + \sqrt{3}) - D \cdot (1 + \sqrt{3}) + C \cdot (1 + \sqrt{3}) + D \cdot (1 - \sqrt{3}) &= -(1 + \sqrt{3}) + 3 \\ D \cdot (1 - \sqrt{3} - (1 + \sqrt{3})) &= 2 - \sqrt{3} && \text{Combine like t} \\ D \cdot (-2\sqrt{3}) &= 2 - \sqrt{3} && \text{Combine like t} \\ D &= \frac{2 - \sqrt{3}}{-2\sqrt{3}} && \text{Divide each side by} \\ D &= \frac{\sqrt{3} - 2}{2\sqrt{3}} \end{aligned}$$

Step 3

3 of 4

We have determine D. We can then determine C using the known values of D and the equation $C + D = 1$.

$$\begin{aligned} C + D &= 1 \\ C + \frac{\sqrt{3} - 2}{2\sqrt{3}} &= 1 && D = \frac{\sqrt{3} - 2}{2\sqrt{3}} \\ C &= 1 - \frac{\sqrt{3} - 2}{2\sqrt{3}} && \text{Subtract } \frac{1}{4} \text{ from each side} \\ &= \frac{2\sqrt{3}}{2\sqrt{3}} - \frac{\sqrt{3} - 2}{2\sqrt{3}} \\ &= \frac{2\sqrt{3} - \sqrt{3} + 2}{2\sqrt{3}} \\ &= \frac{\sqrt{3} + 2}{2\sqrt{3}} \end{aligned}$$

Since the general solution was $s_n = C \cdot (1 + \sqrt{3})^n + D \cdot (1 - \sqrt{3})^n$, we then obtain:

$$s_n = C \cdot (1 + \sqrt{3})^n + D \cdot (1 - \sqrt{3})^n = \frac{\sqrt{3} + 2}{2\sqrt{3}} \cdot (1 + \sqrt{3})^n + \frac{\sqrt{3} - 2}{2\sqrt{3}} \cdot (1 - \sqrt{3})^n$$

Result

4 of 4

$$s_n = \frac{\sqrt{3} + 2}{2\sqrt{3}} \cdot (1 + \sqrt{3})^n + \frac{\sqrt{3} - 2}{2\sqrt{3}} \cdot (1 - \sqrt{3})^n \text{ for all integers } n \geq 0$$

Exercise 15 Exercise 17

Exercise 16

Chapter 5, section 5.8, page 363

Discrete Mathematics with Applications
ISBN: 9781337694193
Table of contents

Solutions Verified

Solution A Solution B

Step 1

1 of 2

$S_k = 2S_{k-1} + 2S_{k-2}$ for all integers.

$S_0 = 1,\ S_1 = 3.$

This is a second-order ~~cho~~ homogeneous, linear recurrence relation. The characteristic equation is given by,

$$t^2 - 2t - 2 = 0$$

$$\Rightarrow t = \frac{2 \pm \sqrt{4 - 4(-2)}}{2} = \frac{2 \pm \sqrt{12}}{2} = \frac{2 \pm 2\sqrt{3}}{2}$$

$$\Rightarrow \boxed{t = 1 \pm \sqrt{3}}$$

The characteristic equation has two distinct roots. So, by distinct-roots theorem,

$$S_n = C \cdot (1+\sqrt{3})^n + D(1-\sqrt{3})^n$$

Initial Conditions: $S_0 = 1,\ S_1 = 3$

$\Rightarrow C + D = 1$ — ①

$C(1+\sqrt{3}) + D(1-\sqrt{3}) = 3$ — ②

From ①, substitute $D = (1-C)$ in equation ②,

$C(1+\sqrt{3}) + (1-C)(1-\sqrt{3}) = 3$

$\Rightarrow C[(1+\sqrt{3}) - (1-\sqrt{3})] = 3 - (1-\sqrt{3})$

$\Rightarrow C(2\sqrt{3}) = 2+\sqrt{3} \Rightarrow \boxed{C = \frac{2+\sqrt{3}}{2\sqrt{3}}}$

$\therefore D = 1 - C$

$= 1 - \frac{2+\sqrt{3}}{2\sqrt{3}}$

$= \frac{2\sqrt{3} - 2 - \sqrt{3}}{2\sqrt{3}}$

$\boxed{D = \frac{\sqrt{3} - 2}{2\sqrt{3}}}$

Therefore: $S_n = \left(\frac{2+\sqrt{3}}{2\sqrt{3}}\right)(1+\sqrt{3})^n + \left(\frac{\sqrt{3}-2}{2\sqrt{3}}\right)(1-\sqrt{3})^n$

Step 2

2 of 2

$$\therefore S_n = \frac{1}{2\sqrt{3}}\left[(2+\sqrt{3})(1+\sqrt{3})^n + (\sqrt{3}-2)(1-\sqrt{3})^n\right],$$

for all integers $n \geq 0$.

Exercise 15 Exercise 17

Exercise 17

Chapter 5, section 5.8, page 363

Discrete Mathematics with Applications
ISBN: 9781337694193
Table of contents

Solution

Verified

Step 1

1 of 8

Given:

$$c_n = c_{n-1} + c_{n-2} \text{ for all integers } n \geq 3$$
$$c_1 = 1$$
$$c_2 = 2$$

In general, $c_n = Ac_{n-1} + Bc_{n-2}$

$$A = 1$$
$$B = 1$$

We first determine the roots of the characteristic equation $t^2 - At - B$ for these values of A and B.

$$t^2 - At - B = 0$$

$A = 1$ and $B = 1$

$$t^2 - 1t - 1 = 0$$
$$t^2 - t - 1 = 0$$

Use quadratic formula $t = \frac{-b \pm \sqrt{b^2 - 4ac}}{2a}$

$$t = \frac{-(-1) \pm \sqrt{(-1)^2 - 4(1)(-1)}}{2 \cdot 1}$$
$$= \frac{1 \pm \sqrt{5}}{2}$$

Thus the two roots of the characteristic equation are $r = \frac{1+\sqrt{5}}{2}$ and $s = \frac{1-\sqrt{5}}{2}$.

Step 2

2 of 8

Since the roots are distinct, the explicit formula of the sequence is $c_n = Cr^n + Ds^n$ by the **Distinct-Roots Theorem**.

$$c_n = Cr^n + Ds^n$$
$$= C \cdot \left(\frac{1+\sqrt{5}}{2}\right)^n + D \cdot \left(\frac{1-\sqrt{5}}{2}\right)^n$$

$r = \frac{1+\sqrt{5}}{2}$ and $s = \frac{1-\sqrt{5}}{2}$

We can determine the constants C and D by using the initial conditions $c_1 = 1$ and $c_2 = 2$.

$$c_1 = C \cdot \left(\frac{1+\sqrt{5}}{2}\right)^1 + D \cdot \left(\frac{1-\sqrt{5}}{2}\right)^1 = C \cdot \left(\frac{1+\sqrt{5}}{2}\right) + D \cdot \left(\frac{1-\sqrt{5}}{2}\right)$$
$$c_2 = C \cdot \left(\frac{1+\sqrt{5}}{2}\right)^2 + D \cdot \left(\frac{1-\sqrt{5}}{2}\right)^2$$

Since $c_1 = 1$ and $c_2 = 2$:

$$C \cdot \left(\frac{1+\sqrt{5}}{2}\right) + D \cdot \left(\frac{1-\sqrt{5}}{2}\right) = 1$$
$$C \cdot \left(\frac{1+\sqrt{5}}{2}\right)^2 + D \cdot \left(\frac{1-\sqrt{5}}{2}\right)^2 = 2$$

Multiply the first equation by $-\left(\frac{1+\sqrt{5}}{2}\right)$:

$$-C \cdot \left(\frac{1+\sqrt{5}}{2}\right)^2 - D \cdot \left(\frac{1-\sqrt{5}}{2}\right)\left(\frac{1+\sqrt{5}}{2}\right) = -\frac{1+\sqrt{5}}{2}$$
$$C \cdot \left(\frac{1+\sqrt{5}}{2}\right)^2 + D \cdot \left(\frac{1-\sqrt{5}}{2}\right)^2 = 2$$

Step 3

3 of 8

Add the two equations:

jmlirjset mjretm lrejtj erjtl jrjtlr jlktjrl jlrtj ljr litelrj tlretm ermthmre hmtlrel thmrleht hlirht l

Step 4

4 of 8

$$D \cdot \left(\frac{1-\sqrt{5}}{2}\right)^2 - D \cdot \left(\frac{1-\sqrt{5}}{2}\right)\left(\frac{1+\sqrt{5}}{2}\right) = 2 - \frac{1+\sqrt{5}}{2}$$

$(a-b)^2 = a^2 - 2ab + b^2$

$$D \cdot \frac{1-2\sqrt{5}+5}{4} - D \cdot \frac{(1-\sqrt{5})(1+\sqrt{5})}{4} = \frac{3-\sqrt{5}}{2}$$

$(a-b)(a+b) = a^2 - b^2$

$$D \cdot \frac{1-2\sqrt{5}+5}{4} - D \cdot \frac{1^2-(\sqrt{5})^2}{4} = \frac{3-\sqrt{5}}{2}$$
$$D \cdot \frac{1-2\sqrt{5}+5}{4} - D \cdot \frac{1-5}{4} = \frac{3-\sqrt{5}}{2}$$
$$D \cdot \frac{1-2\sqrt{5}+5}{4} - D \cdot \frac{-4}{4} = \frac{3-\sqrt{5}}{2}$$

Distributive property

$$D \cdot \left(\frac{1-2\sqrt{5}+5}{4} - \frac{-4}{4}\right) = \frac{3-\sqrt{5}}{2}$$
$$D \cdot \left(\frac{1-2\sqrt{5}+5+4}{4}\right) = \frac{3-\sqrt{5}}{2}$$
$$D \cdot \left(\frac{10-2\sqrt{5}}{4}\right) = \frac{3-\sqrt{5}}{2}$$
$$D \cdot \left(\frac{5-\sqrt{5}}{2}\right) = \frac{3-\sqrt{5}}{2}$$

Multiply each side by $\frac{2}{5-\sqrt{5}}$

$$D = \frac{3-\sqrt{5}}{2} \cdot \left(\frac{2}{5-\sqrt{5}}\right)$$
$$= \frac{(3-\sqrt{5})(5+\sqrt{5})}{(5-\sqrt{5})(5+\sqrt{5})}$$

$a^2 - b^2 = (a-b)(a+b)$

$$= \frac{15-5\sqrt{5}+3\sqrt{5}-(\sqrt{5})^2}{5^2-(\sqrt{5})^2}$$
$$= \frac{15-2\sqrt{5}-5}{25-5}$$
$$= \frac{10-2\sqrt{5}}{20}$$
$$= \frac{5-\sqrt{5}}{10}$$

Step 5

5 of 8

We have determine D. We can then determine C using the known values of D and the equation $C + D = 1$.

Step 6

6 of 8

$$C \cdot \left(\frac{1+\sqrt{5}}{2}\right) + D \cdot \left(\frac{1-\sqrt{5}}{2}\right) = 1$$

$D = \frac{5-\sqrt{5}}{10}$

$$C \cdot \left(\frac{1+\sqrt{5}}{2}\right) + \frac{5-\sqrt{5}}{10} \cdot \left(\frac{1-\sqrt{5}}{2}\right) = 1$$
$$C \cdot \left(\frac{1+\sqrt{5}}{2}\right) + \frac{5-\sqrt{5}-5\sqrt{5}+(\sqrt{5})^2}{20} = 1$$
$$C \cdot \left(\frac{1+\sqrt{5}}{2}\right) + \frac{5-6\sqrt{5}+5}{20} = 1$$
$$C \cdot \left(\frac{1+\sqrt{5}}{2}\right) + \frac{10-6\sqrt{5}}{20} = 1$$
$$C \cdot \left(\frac{1+\sqrt{5}}{2}\right) + \frac{5-3\sqrt{5}}{10} = 1$$

Subtract $\frac{5-3\sqrt{5}}{10}$ from each side

$$C \cdot \left(\frac{1+\sqrt{5}}{2}\right) = 1 - \frac{5-3\sqrt{5}}{10}$$
$$C \cdot \left(\frac{1+\sqrt{5}}{2}\right) = \frac{10-5+3\sqrt{5}}{10}$$
$$C \cdot \left(\frac{1+\sqrt{5}}{2}\right) = \frac{5+3\sqrt{5}}{10}$$

Multiply each side by $\frac{2}{1+\sqrt{5}}$

$$C = \frac{5+3\sqrt{5}}{10} \cdot \frac{2}{1+\sqrt{5}}$$
$$= \frac{5+3\sqrt{5}}{5(1+\sqrt{5})}$$
$$= \frac{(5+3\sqrt{5})(1-\sqrt{5})}{5(1+\sqrt{5})(1-\sqrt{5})}$$
$$= \frac{5+3\sqrt{5}-5\sqrt{5}-3(\sqrt{5})^2}{5(1^2-(\sqrt{5})^2)}$$
$$= \frac{5-2\sqrt{5}-15}{5(1-5)}$$
$$= \frac{-10-2\sqrt{5}}{-20}$$
$$= \frac{5+\sqrt{5}}{10}$$

Step 7

7 of 8

Since the general solution was $c_n = C \cdot \left(\frac{1+\sqrt{5}}{2}\right)^n + D \cdot \left(\frac{1-\sqrt{5}}{2}\right)^n$, we then obtain:

$$c_n = C \cdot \left(\frac{1+\sqrt{5}}{2}\right)^n + D \cdot \left(\frac{1-\sqrt{5}}{2}\right)^n = \frac{5+\sqrt{5}}{10} \cdot \left(\frac{1+\sqrt{5}}{2}\right)^n + \frac{5-\sqrt{5}}{10} \cdot \left(\frac{1-\sqrt{5}}{2}\right)^n$$

Result

8 of 8

$$c_n = \frac{5+\sqrt{5}}{10} \cdot \left(\frac{1+\sqrt{5}}{2}\right)^n + \frac{5-\sqrt{5}}{10} \cdot \left(\frac{1-\sqrt{5}}{2}\right)^n \text{ for all integers } n \geq 1$$

Exercise 16 Exercise 18

Exercise 18

Chapter 5, section 5.8, page 363

Discrete Mathematics with Applications
ISBN: 9781337694193

Table of contents

Solution

Verified

Step 1

1 of 2

Given:

$s_k = 5s_{k-1} - 4s_{k-2}$ for all integers $k \geq 2$

$t_k = 5t_{k-1} - 4t_{k-2}$ for all integers $k \geq 2$

To proof: $2s_k + 3t_k = 5(2s_{k-1} + 3t_{k-1}) - 4(2s_{k-2} + 3t_{k-2})$ for all integers $k \geq 2$

PROOF

Let k be an integer such that $k \geq 2$.

$$\begin{aligned}
2s_k + 3t_k &= 2 \cdot (5s_{k-1} - 4s_{k-2}) + 3t_k && s_k = 5s_{k-1} - 4s_{k-2} \\
&= 2 \cdot (5s_{k-1} - 4s_{k-2}) + 3 \cdot (5t_{k-1} - 4t_{k-2}) && t_k = 5t_{k-1} - 4t_{k-2} \\
&= 2 \cdot 5 \cdot s_{k-1} - 2 \cdot 4 \cdot s_{k-2} + 3 \cdot 5 \cdot t_{k-1} - 3 \cdot 4 \cdot t_{k-2} && \text{Distributive property} \\
&= 5 \cdot (2 \cdot s_{k-1} + 3 \cdot t_{k-1}) - 4 \cdot (2 \cdot s_{k-2} + 3 \cdot t_{k-2}) && \text{Distributive property} \\
&= 5 \cdot (2s_{k-1} + 3t_{k-1}) - 4 \cdot (2s_{k-2} + 3t_{k-2})
\end{aligned}$$

Thus we have shown $2s_k + 3t_k = 5 \cdot (2s_{k-1} + 3t_{k-1}) - 4 \cdot (2s_{k-2} + 3t_{k-2})$.

$\square$

Result

2 of 2

$2s_k + 3t_k = 5(2s_{k-1} + 3t_{k-1}) - 4(2s_{k-2} + 3t_{k-2})$ for all integers $k \geq 2$

Exercise 17 Exercise 19

Exercise 19

Chapter 5, section 5.8, page 363

Discrete Mathematics with Applications
ISBN: 9781337694193
Table of contents

Solutions

Verified

Solution A Solution B

Step 1

1 of 3

Given: r, s, a_0 and a_1 are real numbers with $r \neq s$

To proof: There exist unique numbers C and D such that $C + D = a_0$ and $Cr + Ds = a_1$.

PROOF

Existance Let r, s, a_0 and a_1 be real numbers with $r \neq s$

$$\begin{aligned} C + D &= a_0 \\ Cr + Ds &= a_1 \end{aligned}$$

Multiply the first equation by $-r$:

$$\begin{aligned} -Cr - Dr &= -a_0 r \\ Cr + Ds &= a_1 \end{aligned}$$

Add the two equations:

$$\begin{aligned} -Cr - Dr + Cr + Ds &= -a_0 r + s_1 \\ D(s - r) &= -a_0 r + s_1 && \text{Combine like terms} \\ D &= \frac{-a_0 r + s_1}{s - r} && \text{Divide each side by } (s - r) \\ & && \text{Note: } s - r \neq 0 \text{ as } r \neq s \end{aligned}$$

We have determined an expression for D. Using the equation $C + D = a_0$, we can then also determine an expression for C.

$$\begin{aligned} C &= a_0 - D \\ &= a_0 - \frac{-a_0 r + s_1}{s - r} \\ &= \frac{a_0(s - r) + a_0 r - s_1}{s - r} \\ &= \frac{a_0 s - a_0 r + a_0 r - s_1}{s - r} \\ &= \frac{a_0 s - s_1}{s - r} && \text{Combine like terms} \end{aligned}$$

Thus we have shown that $C = \frac{a_0 s - s_1}{s - r}$ and $D = \frac{-a_0 r + s_1}{s - r}$ are solutions of $C + D = a_0$ and $Cr + Ds = a_1$.

Step 2

2 of 3

Uniqueness

Let C_1 and D_1 be real numbers that satisfy $C_1 + D_1 = a_0$ and $C_1 r + D_1 s = a_1$.

Similar to the derivation of C and D, we would then obtain: $C_1 = \frac{a_0 s - s_1}{s - r} = C$ and $D_1 = \frac{-a_0 r + s_1}{s - r} = D$

Thus we then note that the solution $C = \frac{a_0 s - s_1}{s - r}$ and $D = \frac{-a_0 r + s_1}{s - r}$ is unique.

$\square$

Result

3 of 3

There exist unique numbers C and D such that $C + D = a_0$ and $Cr + Ds = a_1$.

Exercise 18 Exercise 20

Exercise 19

Chapter 5, section 5.8, page 363

Discrete Mathematics with Applications
ISBN: 9781337694193
Table of contents

Solutions Verified

Solution A Solution B

r, s, a_0, a_1 - Real numbers with $r \neq s$.

To show: There exist unique numbers C and D so that

$$C + D = a_0$$
$$Cr + Ds = a_1$$

Proof:

$$C + D = a_0 \quad - (1)$$
$$Cr + Ds = a_1 \quad - (2)$$

Eqn (1) $\times r$ - Eqn (2) gives,

$$(Cr + Dr) - (Cr + Ds) = a_0 r - a_1$$

$$\Rightarrow D(r - s) = a_0 r - a_1$$

$$\Rightarrow \boxed{D = \frac{a_0 r - a_1}{r - s}} \quad \ldots (\because r \neq s \Rightarrow r - s \neq 0)$$

From (1),

$$C = a_0 - D = a_0 - \frac{a_0 r - a_1}{r - s}$$

$$= \frac{a_0 r - s a_0 - a_0 r + a_1}{r - s}$$

$$\boxed{C = \frac{a_1 - s a_0}{r - s}}$$

Therefore, we get unique values of C and D.

$$\boxed{C = \frac{a_1 - s a_0}{r - s}} \quad \boxed{D = \frac{a_0 r - a_1}{r - s}}$$

Exercise 18 Exercise 20

Exercise 20

Chapter 5, section 5.8, page 363

Discrete Mathematics with Applications
ISBN: 9781337694193
Table of contents

Solution

Verified

Step 1

1 of 3

Given: r is a nonzero real number, k and m are distinct integers, a_k and a_m are real numbers.

To proof: There exist unique numbers C and D such that $Cr^k + kDr^k = a_k$ and $Cr^m + mDr^m = a_m$.

PROOF

Existance Let r be a nonzero real number ($r \neq 0$), k and m distinct integers ($m \neq k$), a_k and a_m real numbers.

$$\begin{aligned} Cr^k + kDr^k &= a_k \\ Cr^m + mDr^m &= a_m \end{aligned}$$

Multiply the first equation by $-r^{m-k}$:

$$\begin{aligned} -r^{m-k}Cr^k - r^{m-k}kDr^k &= -r^{m-k}a_k \\ Cr^m + mDr^m &= a_m \end{aligned}$$

Add the two equations:

$$\begin{aligned} -r^{m-k}Cr^k - r^{m-k}kDr^k + Cr^m + mDr^m &= -r^{m-k}a_k + a_m \\ -Cr^{m-k+k} - kDr^{m-k+k} + Cr^m + mDr^m &= a_m - a_k r^{m-k} \\ -Cr^m - kDr^m + Cr^m + mDr^m &= a_m - a_k r^{m-k} \\ -kDr^m + mDr^m &= a_m - a_k r^{m-k} && \text{Combine like term} \\ (m-k)Dr^m &= a_m - a_k r^{m-k} && \text{Distributive propert} \\ D &= \frac{a_m - a_k r^{m-k}}{(m-k)r^m} && \text{Divide each side by } (m-k)r \\ & && \text{Note: } (m-k)r^k \neq 0 \text{ since } m \neq k \text{ and } r \neq \end{aligned}$$

Step 2

2 of 3

We have determined an expression for D. Using the equation $Cr^k + kDr^k = a_k$, we can then also determine an expression for C.

$$\begin{aligned} Cr^k + kDr^k &= a_k \\ Cr^k &= a_k - kDr^k && \text{Subtract } kDr^k \text{ from each side} \\ C &= \frac{a_k - kDr^k}{r^k} && \text{Divide each side by } r^k \\ & && \text{Note: } r^k \neq 0 \text{ since } r \neq 0 \\ &= \frac{a_k}{r^k} - kD \\ &= \frac{a_k}{r^k} - k \cdot \frac{a_m - a_k r^{m-k}}{(m-k)r^m} && D = \frac{a_m - a_k r^{m-k}}{(m-k)r^m} \end{aligned}$$

Thus we have shown that $C = \frac{a_k}{r^k} - k \cdot \frac{a_m - a_k r^{m-k}}{(m-k)r^m}$ and $D = \frac{a_m - a_k r^{m-k}}{(m-k)r^m}$ are solutions of $Cr^k + kDr^k = a_k$ and $Cr^m + mDr^m = a_m$.

Uniqueness

Let C_1 and D_1 be real numbers that satisfy $C_1 r^k + kD_1 r^k = a_k$ and $C_1 r^m + mD_1 r^m = a_m$.

Similar to the derivation of C and D, we would then obtain: $C_1 = \frac{a_k}{r^k} - k \cdot \frac{a_m - a_k r^{m-k}}{(m-k)r^m} = C$ and $D_1 = \frac{a_m - a_k r^{m-k}}{(m-k)r^m} = D$

Thus we then note that the solution $C = \frac{a_k}{r^k} - k \cdot \frac{a_m - a_k r^{m-k}}{(m-k)r^m}$ and $D = \frac{a_m - a_k r^{m-k}}{(m-k)r^m}$ is unique.

$\square$

Result

3 of 3

There exist unique numbers C and D such that $Cr^k + kDr^k = a_k$ and $Cr^m + mDr^m = a_m$.

Exercise 19 Exercise 21

Exercise 21

Chapter 5, section 5.8, page 363

Discrete Mathematics with Applications
ISBN: 9781337694193

Table of contents

Solution

Verified

Step 1

1 of 4

Lemma 5.8.4 If A and B are real numbers and $t^2 - At - Bt = 0$ has a single root r, then $1, r, r^2, r^3, \ldots$

Step 2

2 of 4

Given: $a_k = Aa_{k-1} + Ba_{k-2}$ for all integers $k \geq 2$, A and B are real numbers, $B \neq 0$

The characteristic equation $t^2 - At - B = 0$ has a single real root r.

To proof: $a_n = Cr^n + Dnr^n$ where C and D are real numbers determined by a_0 and other known values of the sequence.

PROOF BY STRONG INDUCTION

Let $P(n)$ be "$a_n = Cr^n + Dnr^n$"

Basis step $n = 0$ and $n = 1$

$$a_0 = Cr^0 + D \cdot 0 \cdot r^0 = C \cdot 1 + 0 = C$$
$$a_1 = Cr^1 + D \cdot 1 \cdot r^1 = Cr + Dr = (C + D)r$$

Thus $P(0)$ and $P(1)$ are true, since $C = a_0$ and $D = \frac{a_1}{r} - C$ are the two real numbers that make the two equations true.

Step 3

3 of 4

Inductive step Let $P(0), P(1) \ldots, P(k)$ be true, thus $a_i = Cr^i + Dir^i$ for $i = 0, 1, 2, \ldots, k$ and $k \geq 1$

We need to prove that $P(k+1)$ is true.

$$\begin{aligned}
a_{k+1} &= Aa_{(k+1)-1} + Ba_{(k+1)-2} && a_k = Aa_{k-1} + B \\
&= Aa_k + Ba_{k-1} && \text{Combine like te} \\
&= A(Cr^k + Dkr^k) + B(Cr^{k-1} + D(k-1)r^{k-1}) && a_i = Cr^i + Dir^i \text{ for } i = k \text{ and } i = k \\
&= ACr^k + ADkr^k + BCr^{k-1} + BD(k-1)r^{k-1} && \text{Distributive prop} \\
&= C(Ar^k + Br^{k-1}) + D(Akr^k + B(k-1)r^{k-1}) && \text{Distributive prop} \\
&= Cr^{k+1} + D(Akr^k + B(k-1)r^{k-1}) && r^{k+1} = Ar^k + B \\
&= Cr^{k+1} + D(k+1)r^{k+1} && \text{By lemma 5.8.4: } (k+1)r^{k+1} = Akr^k + B(k-1)
\end{aligned}$$

Thus $P(k+1)$ is true.

Conclusion By the principle of strong induction, $P(n)$ is true for all positive integers n.

$\square$

Result

4 of 4

$a_n = Cr_n + Dnr^n$ where C and D are real numbers determined by a_0 and other known values of the sequence.

Exercise 20 Exercise 22

Exercise 22

Chapter 5, section 5.8, page 364

Discrete Mathematics with Applications
ISBN: 9781337694193
Table of contents

Solution

Verified

Step 1

1 of 4

Given:

$$\begin{aligned} a_k &= 2a_{k-1} - 2a_{k-2} \text{ for all integers } k \geq 2 \\ a_0 &= 1 \\ a_1 &= 2 \end{aligned}$$

In general: $a_n = Aa_{n-1} + Ba_{n-2}$

$$A = 2$$

$$B = -2$$

We first determine the roots of the characteristic equation $t^2 - At - B$ for these values of A and B.

$$\begin{aligned} t^2 - At - B &= 0 \\ t^2 - 2t - (-2) &= 0 && A = 2 \text{ and } B = -2 \\ t^2 - 2t + 2 &= 0 \\ t &= \frac{-(-2) \pm \sqrt{(-2)^2 - 4(1)(2)}}{2 \cdot 1} && \text{Use quadratic formula } t = \frac{-b \pm \sqrt{b^2 - 4ac}}{2a} \\ &= \frac{2 \pm \sqrt{-4}}{2} \\ &= \frac{2 \pm 2\sqrt{-1}}{2} \\ &= \frac{2 \pm 2i}{2} \\ &= 1 \pm i \end{aligned}$$

Thus the two roots of the characteristic equation are $r = 1 + i$ and $s = 1 - i$.

Step 2

2 of 4

Since the roots are distinct, the explicit formula of the sequence is $a_n = Cr^n + Ds^n$ by the **Distinct-Roots Theorem**.

$$\begin{aligned} a_n &= Cr^n + Ds^n \\ &= C \cdot (1+i)^n + D \cdot (1-i)^n && r = 1 + i \text{ and } s = 1 - i \end{aligned}$$

We can determine the constants C and D by using the initial conditions $a_0 = 1$ and $a_1 = 2$.

$$\begin{aligned} a_0 &= C \cdot (1+i)^0 + D \cdot (1-i)^0 = C \cdot 1 + D \cdot 1 = C + D \\ a_1 &= C \cdot (1+i)^1 + D \cdot (1-i)^1 = C \cdot (1+i) + D \cdot (1-i) \end{aligned}$$

Since $a_0 = 1$ and $a_1 = 2$:

$$\begin{aligned} C + D &= 1 \\ C \cdot (1+i) + D \cdot (1-i) &= 2 \end{aligned}$$

Multiply the first equation by $-(1+i)$:

$$\begin{aligned} -C \cdot (1+i) - D \cdot (1+i) &= -(1+i) \\ C \cdot (1+i) + D \cdot (1-i) &= 2 \end{aligned}$$

Add the two equations:

$$\begin{aligned} -C \cdot (1+i) - D \cdot (1+i) + C \cdot (1+i) + D \cdot (1-i) &= -(1+i) + 2 \\ D \cdot (1 - i - (1+i)) &= 1 - i && \text{Combine li} \\ D \cdot (-2i) &= 1 - i && \text{Combine li} \\ D &= \frac{1-i}{-2i} && \text{Divide each side} \\ &= \frac{(1-i)i}{-2i^2} && \text{Multiply numerator and denomin} \\ &= \frac{i - i^2}{-2i^2} && \text{Distributive} \\ &= \frac{i+1}{2} \end{aligned}$$

Step 3

3 of 4

We have determine D. We can then determine C using the known values of D and the equation $C + D = 1$.

$$\begin{aligned} C + D &= 1 \\ C + \frac{i+1}{2} &= 1 && D = \frac{i+1}{2} \\ C &= 1 - \frac{i+1}{2} && \text{Subtract } \frac{i+1}{2} \text{ from each side} \\ &= \frac{2}{2} - \frac{i+1}{2} \\ &= \frac{2 - i - 1}{2} \\ &= \frac{1-i}{2} \end{aligned}$$

Since the general solution was $a_n = C \cdot (1+i)^n + D \cdot (1-i)^n$, we then obtain:

$$a_n = C \cdot (1+i)^n + D \cdot (1-i)^n = \frac{1-i}{2} \cdot (1+i)^n + \frac{i+1}{2} \cdot (1-i)^n$$

Result

4 of 4

$$a_n = \frac{1-i}{2} \cdot (1+i)^n + \frac{i+1}{2} \cdot (1-i)^n \text{ for all integers } n \geq 0$$

Exercise 21 Exercise 23

Exercise 23

Chapter 5, section 5.8, page 364

Discrete Mathematics with Applications
ISBN: 9781337694193
Table of contents

Solution

Verified

Step 1

1 of 4

Given:

$$b_k = 2b_{k-1} - 5b_{k-2} \text{ for all integers } k \geq 2$$
$$b_0 = 1$$
$$b_1 = 1$$

In general: $b_n = Ab_{n-1} + Bb_{n-2}$

$$A = 2$$
$$B = -5$$

We first determine the roots of the characteristic equation $t^2 - At - B$ for these values of A and B.

$$\begin{aligned} t^2 - At - B &= 0 \\ t^2 - 2t - (-5) &= 0 && A = 2 \text{ and } B = -5 \\ t^2 - 2t + 5 &= 0 \\ t &= \frac{-(-2) \pm \sqrt{(-2)^2 - 4(1)(5)}}{2 \cdot 1} && \text{Use quadratic formula } t = \frac{-b \pm \sqrt{b^2 - 4ac}}{2a} \\ &= \frac{2 \pm \sqrt{-16}}{2} \\ &= \frac{2 \pm 4\sqrt{-1}}{2} \\ &= \frac{2 \pm 4i}{2} \\ &= 1 \pm 2i \end{aligned}$$

Thus the two roots of the characteristic equation are $r = 1 + 2i$ and $s = 1 - 2i$.

Step 2

2 of 4

Since the roots are distinct, the explicit formula of the sequence is $b_n = Cr^n + Ds^n$ by the **Distinct-Roots Theorem**.

$$\begin{aligned} b_n &= Cr^n + Ds^n \\ &= C \cdot (1 + 2i)^n + D \cdot (1 - 2i)^n && r = 1 + 2i \text{ and } s = 1 - 2i \end{aligned}$$

We can determine the constants C and D by using the initial conditions $b_0 = 1$ and $b_1 = 1$.

$$\begin{aligned} b_0 &= C \cdot (1 + 2i)^0 + D \cdot (1 - 2i)^0 = C \cdot 1 + D \cdot 1 = C + D \\ b_1 &= C \cdot (1 + 2i)^1 + D \cdot (1 - 2i)^1 = C \cdot (1 + 2i) + D \cdot (1 - 2i) \end{aligned}$$

Since $a_0 = 1$ and $a_1 = 1$:

$$\begin{aligned} C + D &= 1 \\ C \cdot (1 + 2i) + D \cdot (1 - 2i) &= 1 \end{aligned}$$

Multiply the first equation by $-(1 + 2i)$:

$$\begin{aligned} -C \cdot (1 + 2i) - D \cdot (1 + 2i) &= -(1 + 2i) \\ C \cdot (1 + 2i) + D \cdot (1 - 2i) &= 1 \end{aligned}$$

Add the two equations:

$$\begin{aligned} -C \cdot (1 + 2i) - D \cdot (1 + 2i) + C \cdot (1 + 2i) + D \cdot (1 - 2i) &= -(1 + 2i) + 1 \\ D \cdot (1 - 2i - (1 + 2i)) &= -2i && \text{Comb} \\ D \cdot (-4i) &= -2i && \text{Comb} \\ D &= \frac{-2i}{-4i} && \text{Divide each} \\ &= \frac{1}{2} && \text{Divide numerator and denor} \end{aligned}$$

Step 3

3 of 4

We have determine D. We can then determine C using the known values of D and the equation $C + D = 1$.

$$\begin{aligned} C + D &= 1 \\ C + \frac{1}{2} &= 1 && D = \frac{1}{2} \\ C &= 1 - \frac{1}{2} && \text{Subtract } \frac{1}{2} \text{ from each side} \\ &= \frac{1}{2} \end{aligned}$$

Since the general solution was $b_n = C \cdot (1 + 2i)^n + D \cdot (1 - 2i)^n$, we then obtain:

$$b_n = C \cdot (1 + 2i)^n + D \cdot (1 - 2i)^n = \frac{1}{2} \cdot (1 + 2i)^n + \frac{1}{2} \cdot (1 - 2i)^n$$

Result

4 of 4

$$b_n = \frac{1}{2} \cdot (1 + 2i)^n + \frac{1}{2} \cdot (1 - 2i)^n \text{ for all integers } n \geq 0$$

Exercise 22 Exercise 24

Exercise 24

Chapter 5, section 5.8, page 364

Discrete Mathematics with Applications
ISBN: 9781337694193

Table of contents

Solution

Verified

Step 1

1 of 5

Given:

$$\frac{\phi}{1} = \frac{1}{\phi - 1}$$

(a)

$$\begin{aligned}
\frac{\phi}{1} &= \frac{1}{\phi - 1} && \text{Given} \\
\phi &= \frac{1}{\phi - 1} \\
\phi \cdot (\phi - 1) &= \frac{1}{\phi - 1} \cdot (\phi - 1) && \text{Multiply each side by } (\phi - 1) \\
\phi \cdot (\phi - 1) &= 1 \\
\phi \cdot \phi - 1 \cdot \phi &= 1 && \text{Distributive property} \\
\phi^2 - \phi &= 1 \\
\phi^2 - \phi - 1 &= 1 - 1 && \text{Subtract 1 from each side} \\
\phi^2 - \phi - 1 &= 0 && \text{Combine like terms}
\end{aligned}$$

Thus we then note that $t^2 - t - 1 = 0$ is true when $t = \phi$, which means that ϕ satisfies the equation $t^2 - t - 1 = 0$.

Step 2

2 of 5

(b)

$$\begin{aligned}
t^2 - t - 1 &= 0 \\
t &= \frac{-(-1) \pm \sqrt{(-1)^2 - 4(1)(-1)}}{2 \cdot 1} && \text{Use quadratic formula } t = \frac{-b \pm \sqrt{b^2 - 4ac}}{2a} \\
&= \frac{1 \pm \sqrt{5}}{2}
\end{aligned}$$

Thus the two solutions of $t^2 - t - 1 = 0$ are $\phi_1 = \frac{1 - \sqrt{5}}{2}$ and $\phi_2 = \frac{1 + \sqrt{5}}{2}$.

Step 3

3 of 5

(c) Since the roots $\phi_1 = \frac{1 - \sqrt{5}}{-2}$ and $\phi_2 = \frac{1 + \sqrt{5}}{-2}$ are distinct, the explicit formula of the sequence is $F_n = C\phi_1^n + D\phi_2^n$ by the **Distinct-Roots Theorem**.

$$\begin{aligned}
F_n &= C\phi_1^n + D\phi_2^n \\
&= C \cdot \left(\frac{1 - \sqrt{5}}{2}\right)^n + D \cdot \left(\frac{1 + \sqrt{5}}{2}\right)^n && \phi_1 = \frac{1 - \sqrt{5}}{2} \text{ and } \phi_2 = \frac{1 + \sqrt{5}}{2}
\end{aligned}$$

We can determine the constants C and D by using the initial conditions $F_0 = 0$ and $F_1 = 1$.

$$\begin{aligned}
F_0 &= C \cdot \left(\frac{1 - \sqrt{5}}{2}\right)^0 + D \cdot \left(\frac{1 + \sqrt{5}}{2}\right)^0 = C \cdot 1 + D \cdot 1 = C + D \\
F_1 &= C \cdot \left(\frac{1 - \sqrt{5}}{2}\right)^1 + D \cdot \left(\frac{1 + \sqrt{5}}{2}\right)^1 = C \cdot \left(\frac{1 - \sqrt{5}}{2}\right) + D \cdot \left(\frac{1 + \sqrt{5}}{2}\right)
\end{aligned}$$

Since $F_0 = 0$ and $F_1 = 1$:

$$\begin{aligned}
C + D &= 0 \\
C \cdot \left(\frac{1 - \sqrt{5}}{2}\right) + D \cdot \left(\frac{1 + \sqrt{5}}{2}\right) &= 1
\end{aligned}$$

Multiply the first equation by $-\left(\frac{1 - \sqrt{5}}{2}\right)$:

$$\begin{aligned}
-C \cdot \left(\frac{1 - \sqrt{5}}{2}\right) - D \cdot \left(\frac{1 - \sqrt{5}}{2}\right) &= 0 \\
C \cdot \left(\frac{1 - \sqrt{5}}{2}\right) + D \cdot \left(\frac{1 + \sqrt{5}}{2}\right) &= 1
\end{aligned}$$

Step 4

4 of 5

Add the two equations:

$$\begin{aligned}
D \cdot \left(\frac{1 + \sqrt{5}}{2}\right) - D \cdot \left(\frac{1 - \sqrt{5}}{2}\right) &= 0 + 1 \\
D \cdot \left(\frac{1 + \sqrt{5}}{2} - \frac{1 - \sqrt{5}}{2}\right) &= 1 && \text{Distributive property} \\
D \cdot \left(\frac{1 + \sqrt{5} - 1 + \sqrt{5}}{2}\right) &= 1 \\
D \cdot \left(\frac{2\sqrt{5}}{2}\right) &= 1 && \text{Combine like terms} \\
D \cdot \left(\sqrt{5}\right) &= 1 \\
D &= \frac{1}{\sqrt{5}} && \text{Divide each side by } \sqrt{5} \\
&= \frac{\sqrt{5}}{\sqrt{5}\sqrt{5}} && \text{Divide numerator and denominator by } \sqrt{5} \\
&= \frac{\sqrt{5}}{5}
\end{aligned}$$

We have determine D. We can then determine C using the known values of D and the equation $C + D = 0$.

$$\begin{aligned}
C + D &= 0 \\
C + \frac{\sqrt{5}}{5} &= 0 && D = \frac{\sqrt{5}}{5} \\
C &= -\frac{\sqrt{5}}{5} && \text{Subtract } \frac{\sqrt{5}}{5} \text{ from each side}
\end{aligned}$$

Since the general solution was $F_n = C \cdot (1 + 2i)^n + D \cdot (1 - 2i)^n$, we then obtain:

$$F_n = C \cdot \left(\frac{1 - \sqrt{5}}{2}\right)^n + D \cdot \left(\frac{1 + \sqrt{5}}{2}\right)^n = -\frac{\sqrt{5}}{5} \cdot \phi_1^n + \frac{\sqrt{5}}{5} \cdot \phi_2^n$$

Result

5 of 5

(a) ϕ satisfies the equation $t^2 - t - 1 = 0$.

(b) $\phi_1 = \frac{1 - \sqrt{5}}{2}$ and $\phi_2 = \frac{1 + \sqrt{5}}{2}$

(c) $F_n = -\frac{\sqrt{5}}{5} \cdot \phi_1^n + \frac{\sqrt{5}}{5} \cdot \phi_2^n$

Exercise 23 Exercise 1

Exercise 1

Chapter 8, section 8.1, page 493

Discrete Mathematics with Applications
ISBN: 9781337694193

Table of contents

Solution

Verified

Step 1

1 of 2

Solution:

We are given the congruence modulo 2 relation E defined from $\mathbb{Z}$ to $\mathbb{Z}$, i.e. ordered pair of integers $(m, n) \in \mathbb{Z} \times \mathbb{Z}$ (or equivalently mEn) if and only if $m - n$ is even. Another way to observe this is that $2|(m - n)$.

a) 0 E 0 or $(0, 0) \in E$ because $0 - 0 = 0$ is an even integer;

5 $\not E 2$ or $(5, 2) \notin E$ because $5 - 2 = 3$ is not even;

$(6, 6) \in E$ because $6 - 6 = 0$ is even;

$(-1, 7) \in E$ because $-1 - 7 = -8$ is an even integer.

b) To prove that for any even integer n it holds that $nE0$, we first use the general form of an even integer. Since $n = 2k, k \in \mathbb{Z}$, we have this:

$$nE0 \text{ because } n - 0 = 2k - 0 = 2k$$

which is even since k is an integer.

Result

2 of 2

a) 0 E 0\\;\\
5 $\not E 2$ \\;\\ $(6, 6) \in E$ \\;\\ $(-1, 7) \in E$.

b) Any even integer n equals $2k$ for some $k \in \mathbb{Z}$, and when we subtract 0 from it, it remains even., hence $nE0$ for any even n.

Exercise 38 Exercise 2

Exercise 2

Chapter 8, section 8.1, page 493

Discrete Mathematics with Applications
ISBN: 9781337694193

Table of contents

Solutions

Verified

Solution A Solution B

Step 1

1 of 2

Proof: Let p be $m - n$ is even," let q be both m and n are even," and let r be ``both m and n are odd." Now, to prove that $p \longleftrightarrow (q \vee r)$, we need to prove

$$\text{(i) } p \to (q \vee r) \quad \text{and} \quad \text{(ii) } (q \vee r) \to p$$

(i)\ To prove that $p \to (q \vee r)$, we must prove the logically equivalent statement form $(p \wedge \sim q) \to r$. That is, for all integers m and n, if $m - n$ is even and both m and n are not even, then both m and n are odd. This is self explanatory from the statement since an integer which is not even must be odd.

(ii)\ Now, we need to prove that $(q \vee r) \to p$. That is, for all integers m and n, if both m and n are even or both m and n are odd, then $m - n$ is even.

Case 1: When both m and n are even, then $m = 2r$ and $n = 2s$ for some integers r and s. Then,

$$\begin{aligned} m - n &= 2r - 2s \\ &= 2(r - s) \\ &= 2t \qquad \text{for some integer } t \end{aligned}$$

Thus, by definition of even, $m - n$ is even.

Case 2: When both m and n are odd, then $m = 2a + 1$ and $n = 2b + 1$ for some integers a and b. Then,

$$\begin{aligned} m - n &= (2a + 1) - (2b + 1) \\ &= 2(a - b) \\ &= 2c \qquad \text{for some integer } c \end{aligned}$$

Thus, by definition of even, $m - n$ is even.

Result

2 of 2

Proof: Let p be $m - n$ is even," let q be both m and n are even," and let r be ``both m and n are odd." Now, to prove that $p \longleftrightarrow (q \vee r)$, we need to prove

$$\text{(i) } p \to (q \vee r) \quad \text{and} \quad \text{(ii) } (q \vee r) \to p$$

Exercise 1 Exercise 3

Exercise 3

Chapter 8, section 8.1, page 493

Discrete Mathematics with Applications
ISBN: 9781337694193
Table of contents

Solution

Verified

Step 1 1 of 17

(a)

Step 2 2 of 17

Here $m = 10$ and $n = 1$. Then $m - n = 10 - 1 = 9$ and $3|9$ so $10\ T\ 1$ is true.

$10\ T\ 1$?

Step 3 3 of 17

Here $m = 1$ and $n = 10$. $(m - n) = (1 - 10) = -9$ and $3|-9$ so $1\ T\ 10$ is true.

$1\ T\ 10$?

Step 4 4 of 17

$m = n = 2$ so $3|(m - n) \iff 3|(2 - 2) \iff 3|0$, which is trivially true so $(2, 2) \in T$.

$(2, 2) \in T$?

Step 5 5 of 17

$m = 8$ and $n = 1$, so $m - n = 7$, however $3 \nmid 7$ so $(8, 1) \notin T$.

$(8, 1) \in T$?

Step 6 6 of 17

Looking for integers n such that $3 \mid (n - 0) \iff 3 \mid n$ so any number that 3 divides will work. So 5 such numbers are $\{3, 6, 9, 12, 15\}$.

(b) List five integers n such that $n\ T\ 0$

Step 7 7 of 17

Looking for integers n such that $3 \mid (n - 1)$. Simply add 1 to the list from part b to get five integers that satisfy this: $\{4, 7, 10, 13, 16\}$.

(c) List five integers n such that $n\ T\ 1$.

Step 8 8 of 17

Similarly, add 2 to each integer in the list from part b to get the result: $\{5, 8, 11, 14, 17\}$.

(d) List five integers n such that $n\ T\ 2$.

Step 9 9 of 17

(e)

Step 10 10 of 17

Claim: Integers of the form $n = 3k$ with $k \in \mathbb{Z}$ satisfy $n\ T\ 0$.

$n\ T\ 0$

Step 11 11 of 17

Proof: Let $n = 3k$ for some $k \in \mathbb{Z}$. Then $n\ T 0 \iff 3 \mid (n - 0) \iff 3 \mid n \iff 3 \mid 3k$, which is true for any k by the definition of divisor. Thus, integers of the form $n = 3k$, $k \in \mathbb{Z}$ satisfy $n\ T\ 0$. ■

Step 12 12 of 17

Claim: Integers of the form $n = 3k + 1$ with $k \in \mathbb{Z}$ satisfy $n\ T\ 1$.

$n\ T\ 1$

Step 13 13 of 17

Proof: Let $n = 3k + 1$ for $k \in \mathbb{Z}$. By the definition of T, $n\ T\ 1 \iff 3 \mid (n - 1) \iff 3 \mid (3k + 1 - 1) \iff 3 \mid 3k$, which again follows from the definition of divisor. Thus, integers satisfying $n = 3k + 1$, $k \in \mathbb{Z}$ satisfy $n\ T\ 1$ ■

Step 14 14 of 17

$n\ T\ 2$

Step 15 15 of 17

Claim: Integers of the form $n = 3k + 2$ with $k \in \mathbb{Z}$ satisfy $n\ T\ 2$.

Step 16 16 of 17

Proof: Let $n = 3k + 2$ for $k \in \mathbb{Z}$. By the definition of T, $n\ T\ 2 \iff 3 \mid (n - 2) \iff 3 \mid (3k + 2 - 2) \iff 3 \mid 3k$, which again follows from the definition of divisor. Thus, integers satisfying $n = 3k + 2$, $k \in \mathbb{Z}$ satisfy $n\ T\ 2$. ■

Result 17 of 17

(a) Yes, $10T1$, $1T10$ and $(2, 2) \in T$. But, $(8, 1) \notin T$

(b) $\{3, 6, 9, 12, 15\}$

(c) $\{4, 7, 10, 13, 16\}$

(d) $\{5, 8, 11, 14, 17\}$

(e) Integers of the form $n = 3k$, where $k \in \mathbf{Z}$ are related by T to 0. Integers of the form $n = 3k + 1$, where $k \in \mathbf{Z}$ are related by T to 1. Integers of the form $n = 3k + 2$, where $k \in \mathbf{Z}$ are related by T to 2.

Exercise 2 Exercise 4

Exercise 4

Chapter 8, section 8.1, page 493

Discrete Mathematics with Applications
ISBN: 9781337694193

Table of contents

Solution

Verified

Step 1

1 of 6

$m\ P\ n \iff m$ and n have a common prime factor

Step 2

2 of 6

(a) Is $15\ P\ 25$?

Yes. $15 = 3 \times 5$ and $25 = 5 \times 5$ and 5 is prime so both of these numbers have a common prime factor of 5.

Step 3

3 of 6

(b) $22\ P\ 27$?

Factors of 22: $\{1, 2, 11, 22\}$

Factors of 27: $\{1, 3, 9, 27\}$.

1 is not prime and they share no other factors so $22\ P$ 27 is false.

Step 4

4 of 6

(c) $0\ P\ 5$

$$\text{Factors of } 5 : \{1, 5\}$$

Both 5 and 0 are divisible by 5, which is prime. So, $0P5$.

Step 5

5 of 6

(d) Is $8\ P\ 8$?

Factors of 8: $\{1, 2, 4, 8\}$

2 is prime so $8\ P\ 8$ is true by the definition of P.

Result

6 of 6

(a) Yes

(b) No

(c) Yes

(d) Yes

Exercise 3 Exercise 5

Exercise 5

Chapter 8, section 8.1, page 493

Discrete Mathematics with Applications
ISBN: 9781337694193

Table of contents

Solution

Verified

Step 1

1 of 5

$X = \{a, b, c\}$

$A \mathbf{R} B \iff A$ has the same number of elements as B.

Step 2

2 of 5

(a) Is $\{a, b\} \mathbf{R} \{b, c\}$?

Yes. Even though the elements are different, these two subsets of X both have 2 elements so $\{a, b\} \mathbf{R} \{b, c\}$ by the definition of $\mathbf{R}$.

Step 3

3 of 5

(b) Is $\{a\} \mathbf{R} \{a, b\}$?

No. $\{a\}$ has only one element and $\{a, b\}$ has two so $\{a\} \mathbf{R} \{a, b\}$ is not true by the definition of $\mathbf{R}$.

Step 4

4 of 5

(c) Is $\{c\} \mathbf{R} \{b\}$?

Yes. $\{c\}$ and $\{b\}$ both contain only one element so $\{c\} \mathbf{R} \{b\}$ by the definition of $\mathbf{R}$.

Result

5 of 5

(a) Yes

(b) No

(c) Yes

Exercise 4 Exercise 6

Exercise 6

Chapter 8, section 8.1, page 493

Discrete Mathematics with Applications
ISBN: 9781337694193

Table of contents

Solution

Verified

Step 1

1 of 5

$$X = \{a, b, c\}$$

$$A \mathbf{J} B \iff A \cap B \neq \emptyset$$

Step 2

2 of 5

No since $\{a\} \cap \{c\} = \emptyset$.

(a) Is $\{a\} \mathbf{J} \{c\}$?

Step 3

3 of 5

Yes since $\{a, b\} \cap \{b, c\} = \{b\} \neq \emptyset$.

(b) Is $\{a, b\} \mathbf{J} \{b, c\}$?

Step 4

4 of 5

Yes since $\{a, b\} \cap \{a, b, c\} = \{a, b\} \neq \emptyset$.

(c) Is $\{a, b\} \mathbf{J} \{a, b, c\}$?

Result

5 of 5

(a) No

(b) Yes

(c) Yes

Exercise 5 Exercise 7

Exercise 7

Chapter 8, section 8.1, page 493

Discrete Mathematics with Applications
ISBN: 9781337694193

Table of contents

Solution

Verified

Step 1

1 of 6

$$m\,R\,n \iff 5 \mid (m^2 - n^2).$$

Step 2

2 of 6

$(1^2 - (-9)^2) = (1 - 81) = -80 = -16 \times 5$ so 1 $R\,(-9)$ is true.

(a) Is 1 $R\,(-9)$?

Step 3

3 of 6

$(2^2 - 13^2) = (4 - 169) = -165 = -33 \times 5$ so 2 R 13 is true.

(b) Is 2 R 13?

Step 4

4 of 6

$(2^2 - (-8)^2) = (4 - 64) = -60 = -12 \times 5$ so 2 $R\,(-8)$ is true.

(c) Is 2 $R\,(-8)$?

Step 5

5 of 6

$((-8)^2 - 2^2) = (64 - 4) = 60 = 12 \times 5$ so (-8) R 2 is true.

(d) Is (-8) R 2?

Result

6 of 6

(a) Yes

(b) Yes

(c) Yes

(d) Yes

Exercise 6 Exercise 8

Exercise 8

Chapter 8, section 8.1, page 493

Discrete Mathematics with Applications
ISBN: 9781337694193

Table of contents

Solution

Verified

Step 1

1 of 6

$A =$ set of all strings of a and b of length 4.

$s \; R \; t \iff s$ has the same first two characters as t.

Step 2

2 of 6

(a) Is $abaa \; R \; abba$?

Yes. $s = abaa$ and $t = abba$. The first two characters of s are ab and the first two characters of t are ab so $abaa \; R \; abba$ by definition of R.

Step 3

3 of 6

(b) Is $aabb \; R \; bbaa$?

No. $s = aabb$ and $t = bbaa$. The first two characters of s are aa and the first two characters of t are bb so $aabb \; R \; bbaa$ is not true.

Step 4

4 of 6

(c) Is $aaaa \; R \; aaab$?

Yes. $s = aaaa$ and $t = aaab$. The first two characters of s are aa and the first two characters of t are aa so $aaaa \; R \; aaab$ by the definition of R.

Step 5

5 of 6

(d) Is $baaa \; R \; abaa$?

No. $s = baaa$ and $t = abaa$. The first character of s is b and the first character of t is a so the first two characters of s and t cannot be equal. Therefore, $baaa \; R \; abaa$ is not true by the definition of R.

Result

6 of 6

(a) Yes

(b) No

(c) Yes

(d) No

Exercise 7 Exercise 9

Exercise 9

Chapter 8, section 8.1, page 493

Discrete Mathematics with Applications
ISBN: 9781337694193

Table of contents

Solution

Verified

Step 1

1 of 6

$A =$ set of all strings of 0's, 1's, and 2's of length 4.

$s\,R\,t \iff$ the sum of the characters in s equals the sum of the characters in t.

Step 2

2 of 6

(a) Is 0121 R 2200?

$0+1+2+1=4=2+2+0+0$ so 0121 R 2200 is true.

Step 3

3 of 6

(b) Is 1011 R 2101?

$1+0+1+1=3\neq 4=2+1+0+1$ so 1011 R 2101 is not true.

Step 4

4 of 6

(c) Is 2212 R 2121?

$2+2+1+2=7\neq 6=2+2+1+1$ so 2212 R 2121 is not true.

Step 5

5 of 6

(d) Is 1220 R 2111?

$1+2+2+0=5=2+1+1+1$ so 1220 R 2111 is true.

Result

6 of 6

(a) Yes

(b) No

(c) No

(d) Yes

Exercise 8 Exercise 10

Exercise 10

Chapter 8, section 8.1, page 493

Discrete Mathematics with Applications
ISBN: 9781337694193

Table of contents

Solution

Verified

Step 1

1 of 4

$$A = \{3, 4, 5\}$$

$$B = \{4, 5, 6\}$$

$$x \, R \, y \iff x < y$$

Step 2

2 of 4

Which ordered pairs are in R?

$$\{(3,4),(3,5),(3,6),(4,5),(4,6),(5,6)\} \in R$$

Step 3

3 of 4

Which ordered pairs are in R^{-1}?

Recall that $R^{-1} = \{(y,x) \in B \times A | (x,y) \in R\}$. Therefore,

$$\{(4,3),(5,3),(6,3),(5,4),(6,4),(6,5)\} \in R^{-1}.$$

Result

4 of 4

$$\{(3,4),(3,5),(3,6),(4,5),(4,6),(5,6)\} \in R$$

$$\{(4,3),(5,3),(6,3),(5,4),(6,4),(6,5)\} \in R^{-1}$$

Exercise 9 Exercise 11

Exercise 11

Chapter 8, section 8.1, page 493

Discrete Mathematics with Applications
ISBN: 9781337694193

Table of contents

Solution

Verified

Step 1

1 of 4

$$A = \{3, 4, 5\}$$

$$B = \{4, 5, 6\}$$

$$x \, S \, y \iff x \mid y$$

Step 2

2 of 4

Which ordered pairs are in S?

$$\{(3, 6), (4, 4), (5, 5)\} \in S$$

Step 3

3 of 4

Recall that $S^{-1} = \{(y, x) \in B \times A | (x, y) \in S\}$. Then,

Which ordered pairs are in S^{-1}?

$$\{(6, 3), (4, 4), (5, 5)\} \in S^{-1}.$$

Result

4 of 4

$$\{(3, 6), (4, 4), (5, 5)\} \in S$$

$$\{(6, 3), (4, 4), (5, 5)\} \in S^{-1}$$

Exercise 10 Exercise 12

Exercise 12

Chapter 8, section 8.1, page 493

Discrete Mathematics with Applications
ISBN: 9781337694193

Table of contents

Solution

Verified

Step 1

1 of 2

(a)\ If $F : X \to Y$ is one-to-one function but not onto, then it is not necessary that the inverse relation F^{-1} is a function since there can be an element y in Y such that $(y, x) \notin F^{-1}$ for any $x \in X$. For example, X and Y be two sets with elements

$$X = \{1, 2, 3\} \quad \text{and} \quad Y = \{4, 5, 6, 7\}$$

and $F(1) = 4,\ F(2) = 6, F(3) = 7$. Thus, we can see clearly that F is one-to-one but not onto. Now, $F^{-1}(4) = 1,\ F^{-1}(6) = 2,\ F^{-1}(7) = 3$, but $F^{-1}(5)$ is not defined. Hence, F^{-1} is not a function since it does not satisfy the first property of being a function.

(b)\ If $F : X \to Y$ is onto function but not one-to-one, then it is not necessary that the inverse relation F^{-1} is a function since there can be an element y in Y such that $(y, x) \notin F^{-1}$ for any $x \in X$. For example, X and Y be two sets with elements

$$X = \{1, 2, 3\} \quad \text{and} \quad Y = \{4, 5\}$$

and $F(1) = 4,\ F(2) = 5, F(3) = 4$. Thus, we can see clearly that F is onto but not one-to-one. Now, $F^{-1}(4) = 1,\ F^{-1}(5) = 2,\ F^{-1}(4) = 3$, which shows that $F^{-1}(4)$ has two distinct values. Hence, F^{-1} is not a function since it does not satisfy the second property of being a function.

Result

2 of 2

(a)\ No, it does not satisfy first property of being a function.

(b)\ No, it does not satisfy second property of being a function.

Exercise 11 Exercise 13

Exercise 13

Chapter 8, section 8.1, page 494

Discrete Mathematics with Applications
ISBN: 9781337694193
Table of contents

Solution

Verified

Step 1

1 of 2

Given:

$$A = \{0, 1, 2, 3\}$$

$$R = \{(0,0), (1,2), (2,2)\}$$

$$\textbf{Directed graph}$$

We note that A contains 4 elements and thus we will draw 4 points.

We label these points 0, 1, 2, 3 (which are the elements of A).

For every element $(x, y) \in R$ with $x \neq y$, we draw an arrow from x to y.

For every element $(x, x) \in R$, we draw a loop at the point x.

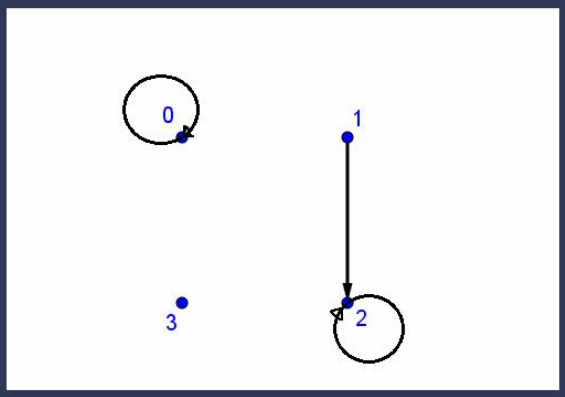

Result

2 of 2

We note that A contains 4 elements and thus we will draw 4 points.

We label these points 0, 1, 2, 3 (which are the elements of A).

For every element $(x, y) \in R$ with $x \neq y$, we draw an arrow from x to y.

For every element $(x, x) \in R$, we draw a loop at the point x.

Exercise 12 Exercise 14

Exercise 14

Chapter 8, section 8.1, page 494

Discrete Mathematics with Applications
ISBN: 9781337694193

Table of contents

Solution

Verified

Step 1

1 of 2

Given:

$$A = \{a, b, c, d\}$$

$$R = \{(a, b), (a, c), (b, c), (d, d)\}$$

Directed graph

We note that A contains 4 elements and thus we will draw 4 points.

We label these points a, b, c, d (which are the elements of A).

For every element $(x, y) \in R$ with $x \neq y$, we draw an arrow from x to y.

For every element $(x, x) \in R$, we draw a loop at the point x.

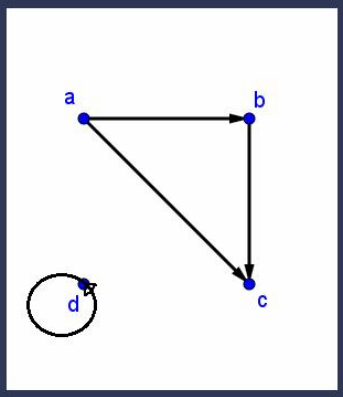

Result

2 of 2

We note that A contains 4 elements and thus we will draw 4 points.

We label these points a, b, c, d (which are the elements of A).

For every element $(x, y) \in R$ with $x \neq y$, we draw an arrow from x to y.

For every element $(x, x) \in R$, we draw a loop at the point x.

Exercise 13 Exercise 15

Exercise 15

Chapter 8, section 8.1, page 494

Discrete Mathematics with Applications
ISBN: 9781337694193
Table of contents

Solution

Verified

Step 1

1 of 3

Given:

$$A = \{2, 3, 4, 5, 6, 7, 8\}$$

$$x \, R \, y \Leftrightarrow x|y$$

Let us first determine all (positive) factors of each element in A:

Element	Factors
2	$1, 2$
3	$1, 3$
4	$1, 2, 4$
5	$1, 5$
6	$1, 2, 3, 6$
7	$1, 7$
8	$1, 2, 4, 8$

$x \, R \, y$ holds when $x|y$ and thus when x is one of the factors of y (note that $x \neq 1$ as 1 is not in A).

$$2 \, R \, 2$$

$$2 \, R \, 4$$

$$2 \, R \, 6$$

$$2 \, R \, 8$$

$$3 \, R \, 3$$

$$3 \, R \, 6$$

$$4 \, R \, 4$$

$$4 \, R \, 8$$

$$5 \, R \, 5$$

$$6 \, R \, 6$$

$$7 \, R \, 7$$

$$8 \, R \, 8$$

Thus the relation R is then:

$$R = \{(2,2), (2,4), (2,6), (2,8), (3,3), (3,6), (4,4), (4,8), (5,5), (6,6), (7,7), (8,8)\}$$

Step 2

2 of 3

Directed graph

We note that A contains 7 elements and thus we will draw 7 points.

We label these points $2, 3, 4, 5, 6, 7, 8$ (which are the elements of A).

For every element $(x, y) \in R$ with $x \neq y$, we draw an arrow from x to y.

For every element $(x, x) \in R$, we draw a loop at the point x.

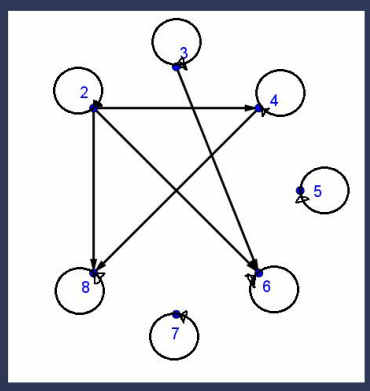

Result

3 of 3

We note that A contains 7 elements and thus we will draw 7 points.

We label these points $2, 3, 4, 5, 6, 7, 8$ (which are the elements of A).

For every element $(x, y) \in R$ with $x \neq y$, we draw an arrow from x to y.

For every element $(x, x) \in R$, we draw a loop at the point x.

Exercise 14 Exercise 16

Exercise 16

Chapter 8, section 8.1, page 494

Discrete Mathematics with Applications
ISBN: 9781337694193
Table of contents

Solution

Verified

Step 1

1 of 3

Given:

$$A = \{5, 6, 7, 8, 9, 10\}$$

$$x \, R \, y \Leftrightarrow 2|(x - y)$$

$x \, R \, y$ holds when $2|(x - y)$ and thus when $x - y$ is divisible by 2. However, $x - y$ is divisible by 2 when x and y are both even, but also when x and y are both odd.

$$5 \, R \, 5$$
$$5 \, R \, 7$$
$$5 \, R \, 9$$
$$7 \, R \, 5$$
$$7 \, R \, 7$$
$$7 \, R \, 9$$
$$9 \, R \, 5$$
$$9 \, R \, 7$$
$$9 \, R \, 9$$
$$6 \, R \, 6$$
$$6 \, R \, 8$$
$$6 \, R \, 10$$
$$8 \, R \, 6$$
$$8 \, R \, 8$$
$$8 \, R \, 10$$
$$10 \, R \, 6$$
$$10 \, R \, 8$$
$$10 \, R \, 10$$

Thus the relation R is then:

$$R = \{(5,5), (5,7), (5,9), (6,6), (6,8), (6,10), (7,5), (7,7), (7,9), (8,6), (8,8), (8,10), (9,5), (9,7), (9,9), (10,6), (10,8), (10,10)\}$$

Step 2

2 of 3

Directed graph

We note that A contains 6 elements and thus we will draw 6 points.

We label these points $5, 6, 7, 8, 9, 10$ (which are the elements of A).

For every element $(x, y) \in R$ with $x \neq y$, we draw an arrow from x to y.

For every element $(x, x) \in R$, we draw a loop at the point x.

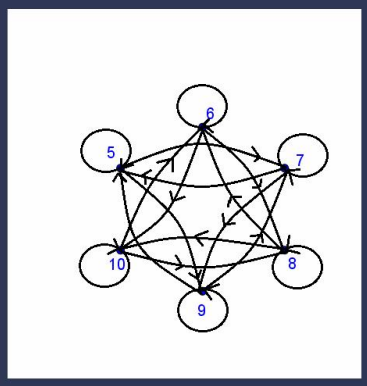

Result

3 of 3

We note that A contains 6 elements and thus we will draw 6 points.

We label these points $5, 6, 7, 8, 9, 10$ (which are the elements of A).

For every element $(x, y) \in R$ with $x \neq y$, we draw an arrow from x to y.

For every element $(x, x) \in R$, we draw a loop at the point x.

Exercise 15 Exercise 17

Exercise 17

Chapter 8, section 8.1, page 494

Discrete Mathematics with Applications
ISBN: 9781337694193

Table of contents

Solution

Verified

Step 1

1 of 3

The arrows between two numbers (or the number and itself) must differ by a multiple of 3 (i.e., 0, 3, or 6) in order for $3|(x-y)$.

Step 2

2 of 3

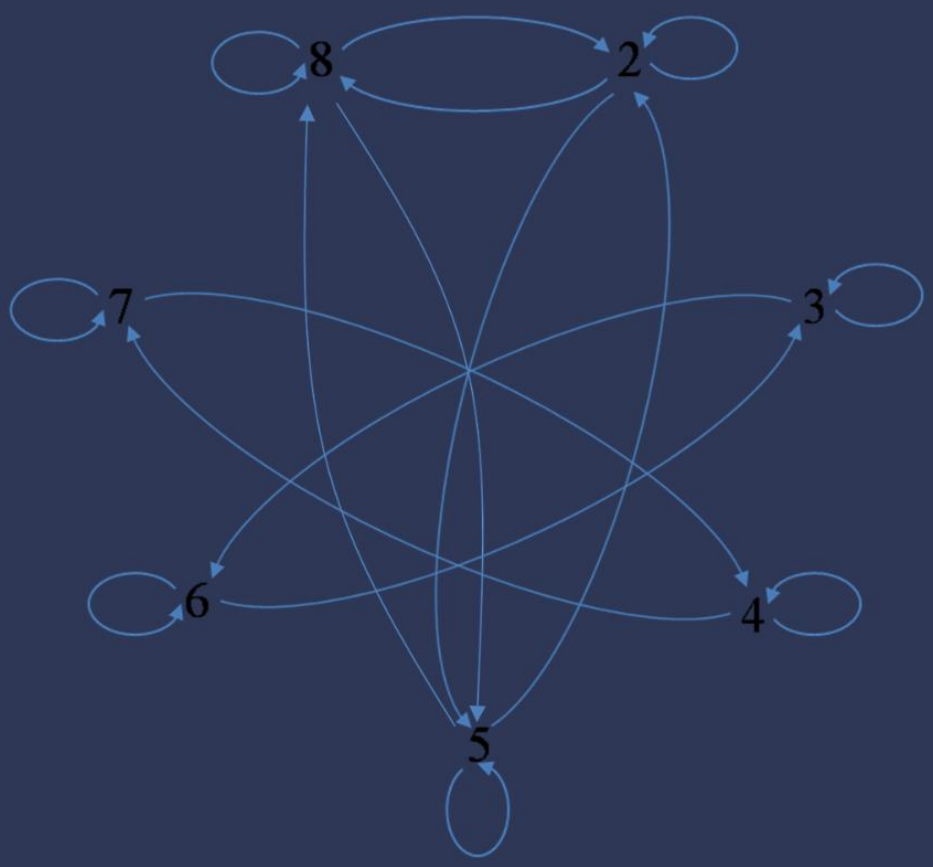

Result

3 of 3

Relation T on A includes $x=y$, $x=2, y=5$ or 8, $x=3, y=6$, $x=4, y=7$, $x=5, y=2$ or 8, $x=6, y=3$, $x=7, y=4$ and $x=8, y=2$ or 5.

Exercise 16 Exercise 18

Exercise 18

Chapter 8, section 8.1, page 494

Discrete Mathematics with Applications
ISBN: 9781337694193
Table of contents

Solution

Verified

Step 1

1 of 6

Given:

$$A = \{0, 1, 2, 3, 4, 5, 6, 7, 8\}$$

$$x \, R \, y \Leftrightarrow x | y$$

$x \, R \, y$ holds when $5|(x^2 - y^2)$ and thus when $x^2 - y^2$ is a multiple of 5.

(x,y)	$x^2 - y^2$	Element of R
$(0,0)$	$0^2 - 0^2 = 0 - 0 = 0$	Yes
$(0,1)$	$0^2 - 1^2 = 0 - 1 = -1$	No
$(0,2)$	$0^2 - 2^2 = 0 - 4 = -4$	No
$(0,3)$	$0^2 - 3^2 = 0 - 9 = -9$	No
$(0,4)$	$0^2 - 4^2 = 0 - 16 = -16$	No
$(0,5)$	$0^2 - 5^2 = 0 - 25 = -25$	Yes
$(0,6)$	$0^2 - 6^2 = 0 - 36 = -36$	No
$(0,7)$	$0^2 - 7^2 = 0 - 49 = -49$	No
$(0,8)$	$0^2 - 8^2 = 0 - 64 = -64$	No
$(1,0)$	$1^2 - 0^2 = 1 - 0 = 1$	No
$(1,1)$	$1^2 - 1^2 = 1 - 1 = 0$	Yes
$(1,2)$	$1^2 - 2^2 = 1 - 4 = -3$	No
$(1,3)$	$1^2 - 3^2 = 1 - 9 = -8$	No
$(1,4)$	$1^2 - 4^2 = 1 - 16 = -15$	Yes
$(1,5)$	$1^2 - 5^2 = 1 - 25 = -24$	No
$(1,6)$	$1^2 - 6^2 = 1 - 36 = -35$	Yes
$(1,7)$	$1^2 - 7^2 = 1 - 49 = -48$	No
$(1,8)$	$1^2 - 8^2 = 1 - 64 = -63$	No

Step 2

2 of 6

(x,y)	$x^2 - y^2$	Element of R
$(2,0)$	$2^2 - 0^2 = 4 - 0 = 4$	No
$(2,1)$	$2^2 - 1^2 = 4 - 1 = 3$	No
$(2,2)$	$2^2 - 2^2 = 4 - 4 = 0$	Yes
$(2,3)$	$2^2 - 3^2 = 4 - 9 = -5$	Yes
$(2,4)$	$2^2 - 4^2 = 4 - 16 = -12$	No
$(2,5)$	$2^2 - 5^2 = 4 - 25 = -21$	No
$(2,6)$	$2^2 - 6^2 = 4 - 36 = -32$	No
$(2,7)$	$2^2 - 7^2 = 4 - 49 = -45$	Yes
$(2,8)$	$2^2 - 8^2 = 4 - 64 = -60$	Yes
$(3,0)$	$3^2 - 0^2 = 9 - 0 = 9$	No
$(3,1)$	$3^2 - 1^2 = 9 - 1 = 8$	No
$(3,2)$	$3^2 - 2^2 = 9 - 4 = 5$	Yes
$(3,3)$	$3^2 - 3^2 = 9 - 9 = 0$	Yes
$(3,4)$	$3^2 - 4^2 = 9 - 16 = -7$	No
$(3,5)$	$3^2 - 5^2 = 9 - 25 = -16$	No
$(3,6)$	$3^2 - 6^2 = 9 - 36 = -27$	No
$(3,7)$	$3^2 - 7^2 = 9 - 49 = -40$	Yes
$(3,8)$	$3^2 - 8^2 = 9 - 64 = -55$	Yes
$(4,0)$	$4^2 - 0^2 = 16 - 0 = 16$	No
$(4,1)$	$4^2 - 1^2 = 16 - 1 = 15$	Yes
$(4,2)$	$4^2 - 2^2 = 16 - 4 = 12$	No
$(4,3)$	$4^2 - 3^2 = 16 - 9 = 7$	No
$(4,4)$	$4^2 - 4^2 = 16 - 16 = 0$	Yes
$(4,5)$	$4^2 - 5^2 = 16 - 25 = -9$	No
$(4,6)$	$4^2 - 6^2 = 16 - 36 = -20$	Yes
$(4,7)$	$4^2 - 7^2 = 16 - 49 = -33$	No
$(4,8)$	$4^2 - 8^2 = 16 - 64 = -48$	No

Step 3

3 of 6

(x,y)	$x^2 - y^2$	Element of R
$(5,0)$	$5^2 - 0^2 = 25 - 0 = 25$	Yes
$(5,1)$	$5^2 - 1^2 = 25 - 1 = 24$	No
$(5,2)$	$5^2 - 2^2 = 25 - 4 = 21$	No
$(5,3)$	$5^2 - 3^2 = 25 - 9 = 16$	No
$(5,4)$	$5^2 - 4^2 = 25 - 16 = 9$	No
$(5,5)$	$5^2 - 5^2 = 25 - 25 = 0$	Yes
$(5,6)$	$5^2 - 6^2 = 25 - 36 = -11$	No
$(5,7)$	$5^2 - 7^2 = 25 - 49 = -24$	No
$(5,8)$	$5^2 - 8^2 = 25 - 64 = -39$	No
$(6,0)$	$6^2 - 0^2 = 36 - 0 = 36$	No
$(6,1)$	$6^2 - 1^2 = 36 - 1 = 35$	Yes
$(6,2)$	$6^2 - 2^2 = 36 - 4 = 32$	No
$(6,3)$	$6^2 - 3^2 = 36 - 9 = 27$	No
$(6,4)$	$6^2 - 4^2 = 36 - 16 = 20$	Yes
$(6,5)$	$6^2 - 5^2 = 36 - 25 = 11$	No
$(6,6)$	$6^2 - 6^2 = 36 - 36 = 0$	Yes
$(6,7)$	$6^2 - 7^2 = 36 - 49 = -13$	No
$(6,8)$	$6^2 - 8^2 = 36 - 64 = -28$	No
$(7,0)$	$7^2 - 0^2 = 49 - 0 = 49$	No
$(7,1)$	$7^2 - 1^2 = 49 - 1 = 48$	No
$(7,2)$	$7^2 - 2^2 = 49 - 4 = 45$	Yes
$(7,3)$	$7^2 - 3^2 = 49 - 9 = 40$	Yes
$(7,4)$	$7^2 - 4^2 = 49 - 16 = 33$	No
$(7,5)$	$7^2 - 5^2 = 49 - 25 = 24$	No
$(7,6)$	$7^2 - 6^2 = 49 - 36 = 13$	No
$(7,7)$	$7^2 - 7^2 = 49 - 49 = 0$	Yes
$(7,8)$	$7^2 - 8^2 = 49 - 64 = -15$	Yes

Step 4

4 of 6

(x,y)	$x^2 - y^2$	Element of R
$(8,0)$	$8^2 - 0^2 = 64 - 0 = 64$	No
$(8,1)$	$8^2 - 1^2 = 64 - 1 = 63$	No
$(8,2)$	$8^2 - 2^2 = 64 - 4 = 60$	Yes
$(8,3)$	$8^2 - 3^2 = 64 - 9 = 55$	Yes
$(8,4)$	$8^2 - 4^2 = 64 - 16 = 48$	No
$(8,5)$	$8^2 - 5^2 = 64 - 25 = 39$	No
$(8,6)$	$8^2 - 6^2 = 64 - 36 = 28$	No
$(8,7)$	$8^2 - 7^2 = 64 - 49 = 15$	Yes
$(8,8)$	$8^2 - 8^2 = 64 - 64 = 0$	Yes

Thus the relation R is then:

$$R = \{(0,0), (0,5), (1,1), (1,4), (1,6), (2,2), (2,3), (2,7), (2,8), (3,2), (3,3), (3,7), (3,8)$$
$$(4,1), (4,4), (4,6), (5,0), (0,5), (6,1), (6,4), (6,6), (7,2), (7,3), (7,7), (7,8)$$
$$(8,2), (8,3), (8,7), (8,8)\}$$

Step 5

5 of 6

Directed graph

We note that A contains 9 elements and thus we will draw 9 points.

We label these points $0, 1, 2, 3, 4, 5, 6, 7, 8$ (which are the elements of A).

For every element $(x, y) \in R$ with $x \neq y$, we draw an arrow from x to y.

For every element $(x, x) \in R$, we draw a loop at the point x.

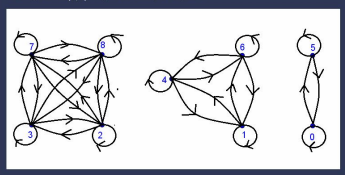

Result

6 of 6

We note that A contains 9 elements and thus we will draw 9 points.

We label these points $0, 1, 2, 3, 4, 5, 6, 7, 8$ (which are the elements of A).

For every element $(x, y) \in R$ with $x \neq y$, we draw an arrow from x to y.

For every element $(x, x) \in R$, we draw a loop at the point x.

Exercise 17 Exercise 19

Exercise 19

Chapter 8, section 8.1, page 494

Discrete Mathematics with Applications
ISBN: 9781337694193

Table of contents

Solution

Verified

Step 1

1 of 2

Since $A = \{2, 4\}$ and $B = \{4, 6, 8\}$, so

$A \times B =$
$\{(2, 6), (2, 8), (2, 10), (4, 6), (4, 8), (4, 10)\}$

$R = \{(2, 6), (2, 8), (2, 10), (4, 8)\}$

$S = \{(2, 6), (4, 8)\}$

As we can see, S is a subset of R, therefore $R \cup S = \{(2, 6), (2, 8), (2, 10), (4, 8)\}$ and $R \cap S = \{(2, 6), (4, 8)\}$

$A \times B$ consists all the ordered pairs (x, y) where x is from set A and y is from set B.

R consists all the ordered pairs (x, y) where $x|y$ (i.e., x divides into y).

S consists all the ordered pairs (x, y) where $y - 4 = x$ (i.e., y is 4 more than x).

Result

2 of 2

$$A \times B = \{(2, 6), (2, 8), (2, 10), (4, 6), (4, 8), (4, 10)\}$$

$$R = \{(2, 6), (2, 8), (2, 10), (4, 8)\}$$

$$S = \{(2, 6), (4, 8)\}$$

$$R \cup S = \{(2, 6), (2, 8), (2, 10), (4, 8)\}$$

$$R \cap S = \{(2, 6), (4, 8)\}$$

Exercise 18 Exercise 20

Exercise 20

Chapter 8, section 8.1, page 494

Discrete Mathematics with Applications
ISBN: 9781337694193

Table of contents

Solution

Verified

Step 1

1 of 2

Since $A = \{-1, 1, 2, 4\}$ and $B = \{1, 2\}$, so

$A \times B =$
$\{(-1,1), (-1,2), (1,1), (1,2), (2,1), (2,2), (4,1), (4,2)\}$

$R = \{(-1,1), (1,1), (2,2)\}$

$S = \{(-1,1), (1,1), (2,2), (4,2)\}$

As we can see, R is a subset of S, therefore $R \cup S =$
$\{(-1,1), (1,1), (2,2), (4,2)\}$ and $R \cap S =$
$\{(-1,1), (1,1), (2,2)\}$

$A \times B$ consists all the ordered pairs (x, y) where x is from set A and y is from set B.

R consists all the ordered pairs (x, y) where $|x| = |y|$.

S consists all the ordered pairs (x, y) where $x - y$ is even.

Result

2 of 2

$$A \times B = \{(-1,1), (-1,2), (1,1), (1,2), (2,1), (2,2), (4,1), (4,2)\}$$

$$R = \{(-1,1), (1,1), (2,2)\}$$

$$S = \{(-1,1), (1,1), (2,2), (4,2)\}$$

$$R \cup S = \{(-1,1), (1,1), (2,2), (4,2)\}$$

$$R \cap S = \{(-1,1), (1,1), (2,2)\}$$

Exercise 19 Exercise 21

Exercise 21

Chapter 8, section 8.1, page 494

Discrete Mathematics with Applications
ISBN: 9781337694193
Table of contents

Solution

Verified

Step 1 1 of 5

Given:

$$R = \{(x, y) \in \mathbf{R} \times \mathbf{R} | x < y\}$$
$$S = \{(x, y) \in \mathbf{R} \times \mathbf{R} | x = y\}$$

Graph R

R contains all ordered pairs (x, y) for which $x < y$, which is the region to the left/above the straight line $y = x$:

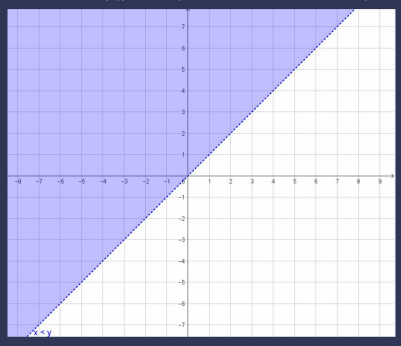

Step 2 2 of 5

Graph S

S contains all ordered pairs (x, y) for which $x = y$, which is the straight line $y = x$.

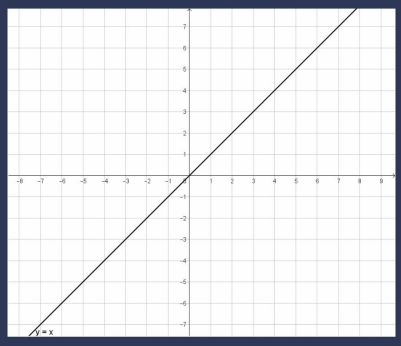

Step 3 3 of 5

Graph union

The graph of the union $R \cup S$ contains all ordered pairs that belong to the region of R or belong to the region of S. Thus the graph of the union then contains both the straight line $y = x$ in the graph of S and the region where $x < y$ in the graph of R.

$$R \cup S = \{(x, y) \in \mathbf{R} \times \mathbf{R} | x \leq y\}$$

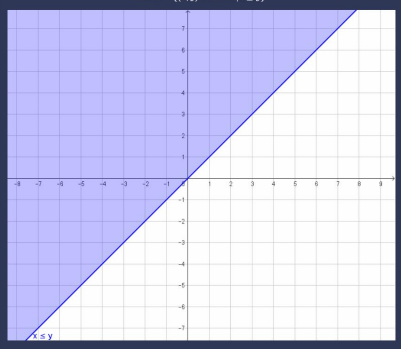

Step 4 4 of 5

Graph intersection

The graph of the intersection $R \cap S$ contains all ordered pairs that belong to the region of R and that also belong to the region of S. However, we note that the region of R and the region of S do not overlap, which indicates that the intersection is empty and the graph of $R \cap S$ is then the Cartesian plane without any region indicates on the plane.

$$R \cap S = \emptyset$$

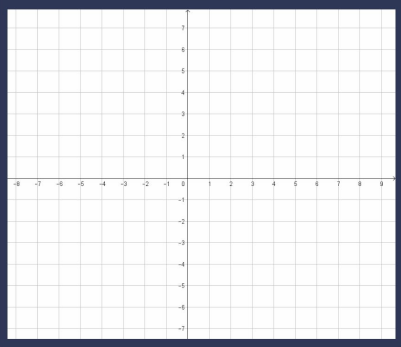

Result 5 of 5

See graphs

Exercise 20 Exercise 22

Exercise 22

Chapter 8, section 8.1, page 494

Discrete Mathematics with Applications
ISBN: 9781337694193
Table of contents

Solution

Verified

Step 1

1 of 5

Given:

$$R = \{(x, y) \in \mathbf{R} \times \mathbf{R} | x^2 + y^2 = 4\}$$
$$S = \{(x, y) \in \mathbf{R} \times \mathbf{R} | x = y\}$$

Graph R

R contains all ordered pairs (x, y) for which $x^2 + y^2 = 4$.

However, $x^2 + y^2 = 4$ represents the circle with radius $\sqrt{4} = 2$ centered about the origin and thus the graph of R is the circle with radius 2 centered at the origin.

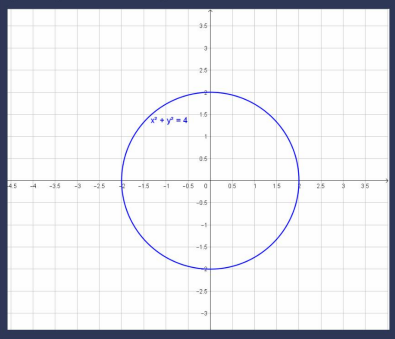

Step 2

2 of 5

Graph S

S contains all ordered pairs (x, y) for which $x = y$, which is the straight line $y = x$.

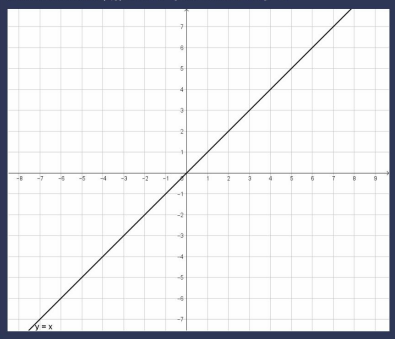

Step 3

3 of 5

Graph union

The graph of the union $R \cup S$ contains all ordered pairs that belong to the region of R or belong to the region of S. Thus the graph of the union then contains both the straight line $y = x$ in the graph of S and the circle $x^2 + y^2 = 4$ in the graph of R.

$$R \cup S = \{(x, y) \in \mathbf{R} \times \mathbf{R} | x^2 + y^2 = 4 \text{ or } x = y\}$$

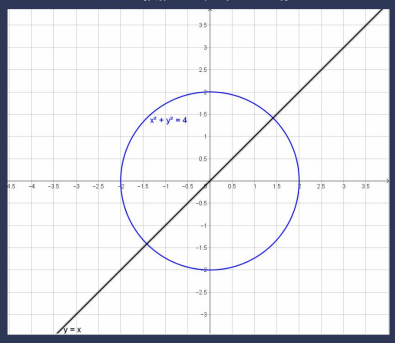

Step 4

4 of 5

Graph intersection

The graph of the intersection $R \cap S$ contains all ordered pairs that belong to the region of R and that also belong to the region of S.

We note that the circle $x^2 + y^2 = 4$ and the straight line $y = x$ overlap in exactly two points, which are $(\sqrt{2}, \sqrt{2})$ and $(-\sqrt{2}, -\sqrt{2})$ (since $y = x$ implies $x^2 + x^2 = 4 \Leftrightarrow 2x^2 = 4 \Leftrightarrow x^2 = 2 \Leftrightarrow x = \pm\sqrt{2}$).

$$R \cap S = \{(-\sqrt{2}, -\sqrt{2}), (\sqrt{2}, \sqrt{2})\}$$

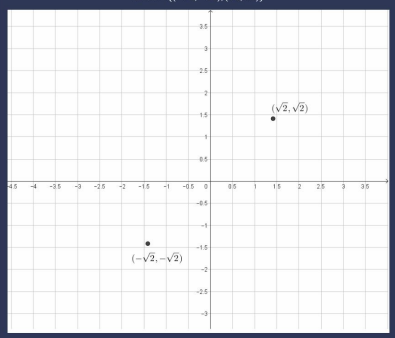

Result

5 of 5

See graphs

Exercise 21 Exercise 23

Exercise 23

Chapter 8, section 8.1, page 494

Discrete Mathematics with Applications
ISBN: 9781337694193
Table of contents

Solution

Verified

Step 1 1 of 5

Given:

$$R = \{(x, y) \in \mathbf{R} \times \mathbf{R} | y = |x|\}$$
$$S = \{(x, y) \in \mathbf{R} \times \mathbf{R} | y = 1\}$$

Graph R

R contains all ordered pairs (x, y) for which $y = |x|$.

Note that $y = |x|$ is the (standard) absolute value function.

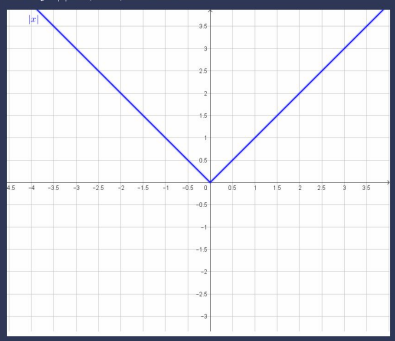

Step 2 2 of 5

Graph S

S contains all ordered pairs (x, y) for which $y = 1$, which is the horizontal line at $y = 1$.

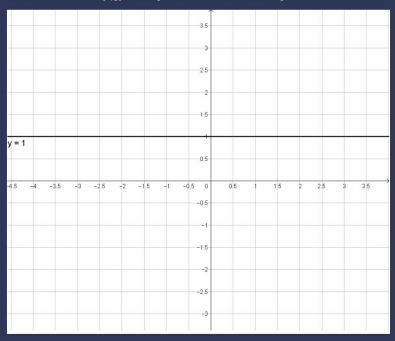

Step 3 3 of 5

Graph union

The graph of the union $R \cup S$ contains all ordered pairs that belong to the region of R or belong to the region of S. Thus the graph of the union then contains both the vertical line $y = 1$ in the graph of S and the absolute value function $y = |x|$ in the graph of R.

$$R \cup S = \{(x, y) \in \mathbf{R} \times \mathbf{R} | y = |x| \text{ or } y = 1\}$$

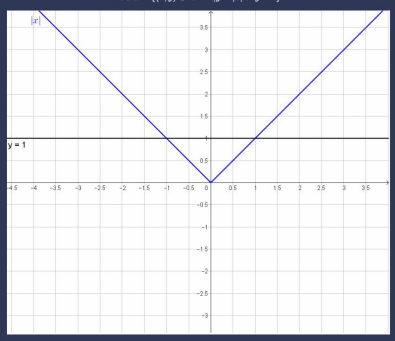

Step 4 4 of 5

Graph intersection

The graph of the intersection $R \cap S$ contains all ordered pairs that belong to the region of R and that also belong to the region of S.

We note that the absolute value function $y = |x|$ and the horizontal line $y = 1$ overlap in exactly two points, which are $(1, 1)$ and $(-1, 1)$ (since $|1| = 1$ and $|-1| = 1$).

$$R \cap S = \{(-1, 1), (1, 1)\}$$

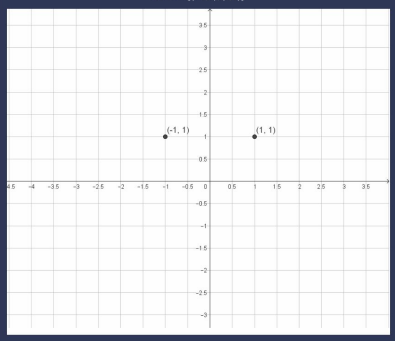

Result 5 of 5

See graphs

Exercise 22 Exercise 24

Exercise 24

Chapter 8, section 8.1, page 494

Discrete Mathematics with Applications
ISBN: 9781337694193

Table of contents

Solution

Verified

Step 1

1 of 4

The relation R contains the following 4-tuples:

(011985, John Schmidt, 020710, asthma)

(574329, Tak Kurosawa, 0114910, pneumonia)

(466581, Mary Lazars, 0103910, appendicitis)

(008352, Joan Kaplan, 112409, gastritis)

(011985, John Schmidt, 021710, pneumonia)

(244388, Sarah Wu, 010310, broken leg)

(778400, Jamal Baskers, 122709, appendicitis)

Step 2

2 of 4

(a) Given query:

SELECT Patient_ID#, Name FROM S WHERE

Primary_Diagonosis = pneumonia

The query then requests all 4-tuples in the relation R that contain "pneumonia" as the 4th element in the 4-tuple:

(574329, Tak Kurosawa, 0114910, pneumonia)

(011985, John Schmidt, 021710, pneumonia)

However, our query only asks for "Patient_ID#, Name", while Patient_ID# is given in the first element of the 4-tuple and Name is given in the second element of the 4-tuple. Thus the result of the query is then:

574329 Tak Kurosawa

011985 John Schmidt

Step 3

3 of 4

(b) Given query:

SELECT Patient_ID#, Name FROM S WHERE

Primary_Diagonosis = appendicitis

The query then requests all 4-tuples in the relation R that contain "pneumonia" as the 4th element in the 4-tuple:

(466581, Mary Lazars, 0103910, appendicitis)

(778400, Jamal Baskers, 122709, appendicitis)

However, our query only asks for "Patient_ID#, Name", while Patient_ID# is given in the first element of the 4-tuple and Name is given in the second element of the 4-tuple. Thus the result of the query is then:

466581 Mary Lazars

778400 Jamal Baskers

Result

4 of 4

(a)

574329 Tak Kurosawa

011985 John Schmidt

(b)

466581 Mary Lazars

778400 Jamal Baskers

Exercise 23 Exercise 1

Exercise 1

Chapter 8, section 8.2, page 503

Discrete Mathematics with Applications
ISBN: 9781337694193
Table of contents

Solution Verified

Step 1

1 of 6

DEFINITIONS

A relation R on a set A is **reflexive** if $(a, a) \in R$ for every element $a \in A$.

A relation R on a set A is **symmetric** if $(b, a) \in R$ whenever $(a, b) \in R$

A relation R on a set A is **transitive** if $(a, b) \in R$ and $(b, c) \in R$ implies $(a, c) \in R$

Step 2

2 of 6

SOLUTION

$$A = \{0, 1, 2, 3\}$$

$$R_1 = \{(0,0), (0,1), (0,3), (1,1), (1,0), (2,3), (3,3)\}$$

(a) **Directed graph**

We note that A contains 4 elements and thus we will draw 4 points.

We label these points 0, 1, 2, 3 (which are the elements of A).

For every element $(x, y) \in R$ with $x \neq y$, we draw an arrow from x to y.

For every element $(x, x) \in R$, we draw a loop at the point x.

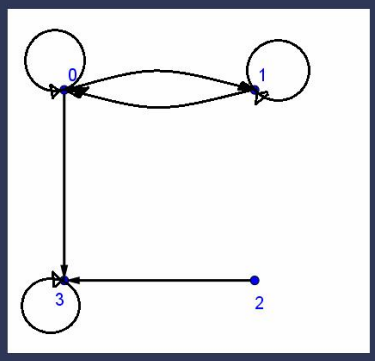

Step 3

3 of 6

(b) The relation R_1 is reflective if $(a, a) \in R_1$ for every element $a \in A$.

Since $A = \{0, 1, 2, 3\}$, R_1 is reflexive if it contains $(0,0), (1,1), (2,2), (3,3)$.

We note that R_1 does not contain $(2, 2)$ and thus R_1 is **not reflexive**.

Step 4

4 of 6

(c) The relation R_1 on a set A is **symmetric** if $(b, a) \in R_1$ whenever $(a, b) \in R_1$

We note that $(0, 3) \in R_1$, while $(3, 0) \notin R_1$ and thus R_1 is **not symmetric**.

Step 5

5 of 6

(d) The relation R_1 on a set A is **transitive** if $(a, b) \in R_1$ and $(b, c) \in R_1$ implies $(a, c) \in R_1$

We note that $(1, 0) \in R_1$ and $(0, 3) \in R_1$, while $(1, 3) \notin R_1$ and thus R_1 is **not transitive**.

Result

6 of 6

(a) See directed graph

(b) Not reflexive

(c) Not symmetric

(d) Not transitive

Exercise 24 Exercise 2

Exercise 2

Chapter 8, section 8.2, page 503

Discrete Mathematics with Applications
ISBN: 9781337694193

Table of contents

Solution

Verified

Step 1

1 of 2

a)

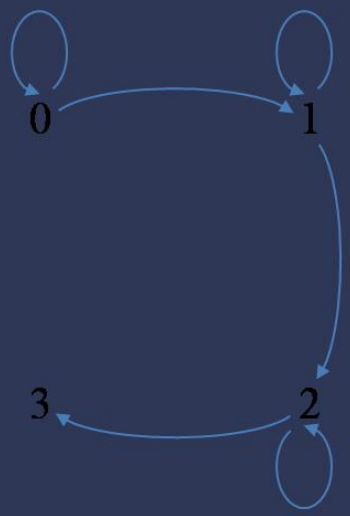

b) No, R_2 is not reflexive because there is no loop at 3.

c) No, R_2 is not symmetric because between two numbers where there exists an arrow, the arrow goes only one direction.

d) No, R_2 is not transitive though there is an arrows between 0 and 1 and also an arrow between 1 and 2, but there is no arrow between 0 and 2.

Result

2 of 2

a) See graph

b) No

c) No

d) No

Exercise 1 Exercise 3

Exercise 3

Chapter 8, section 8.2, page 503

Discrete Mathematics with Applications
ISBN: 9781337694193
Table of contents

Solution Verified

Step 1

1 of 6

DEFINITIONS

A relation R on a set A is **reflexive** if $(a, a) \in R$ for every element $a \in A$.

A relation R on a set A is **symmetric** if $(b, a) \in R$ whenever $(a, b) \in R$

A relation R on a set A is **transitive** if $(a, b) \in R$ and $(b, c) \in R$ implies $(a, c) \in R$

Step 2

2 of 6

SOLUTION

$$A = \{0, 1, 2, 3\}$$

$$R_3 = \{(2, 3), (3, 2)\}$$

(a) **Directed graph**

We note that A contains 4 elements and thus we will draw 4 points.

We label these points 0, 1, 2, 3 (which are the elements of A).

For every element $(x, y) \in R$ with $x \neq y$, we draw an arrow from x to y.

For every element $(x, x) \in R$, we draw a loop at the point x.

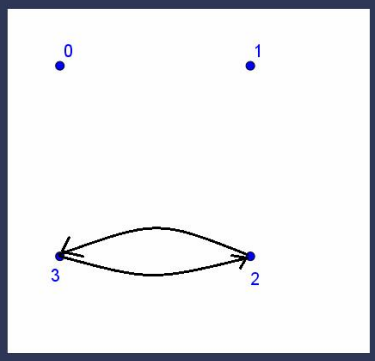

Step 3

3 of 6

(b) The relation R_3 is reflective if $(a, a) \in R_3$ for every element $a \in A$.

Since $A = \{0, 1, 2, 3\}$, R_3 is reflexive if it contains $(0, 0), (1, 1), (2, 2), (3, 3)$.

We note that R_3 does not contain $(0, 0)$ and thus R_3 is **not reflexive**.

Step 4

4 of 6

(c) The relation R_3 on a set A is **symmetric** if $(b, a) \in R_3$ whenever $(a, b) \in R_3$

We note that $(2, 3) \in R_3$ while $(3, 2) \in R_3$ and there are no other ordered pairs in R_3, thus R_3 is **symmetric**.

Step 5

5 of 6

(d) The relation R_3 on a set A is **transitive** if $(a, b) \in R_3$ and $(b, c) \in R_3$ implies $(a, c) \in R_3$

We note that $(2, 3) \in R_3$ and $(3, 2) \in R_3$, while $(2, 2) \notin R_3$ and thus R_3 is **not transitive**.

Result

6 of 6

(a) See directed graph

(b) Not reflexive

(c) Symmetric

(d) Not transitive

Exercise 2 Exercise 4

Exercise 4

Chapter 8, section 8.2, page 503

Discrete Mathematics with Applications
ISBN: 9781337694193
Table of contents

Solution

Verified

Step 1

1 of 2

a)

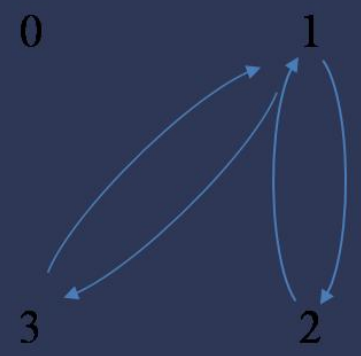

b) No, R_4 is not reflexive because there is no loop at 1.

c) Yes, R_4 is symmetric because between two numbers where there exists an arrow, the arrows go both ways.

d) No, R_4 is not transitive though there are arrows between 2 and 1 and also arrows between 1 and 3, but there are no arrows between 2 and 3.

Result

2 of 2

a) See directed graph

b) No

c) Yes

d) No

Exercise 3 Exercise 5

Exercise 5

Chapter 8, section 8.2, page 503

Discrete Mathematics with Applications
ISBN: 9781337694193
Table of contents

Solution

Verified

Step 1

1 of 6

DEFINITIONS

A relation R on a set A is **reflexive** if $(a, a) \in R$ for every element $a \in A$.

A relation R on a set A is **symmetric** if $(b, a) \in R$ whenever $(a, b) \in R$

A relation R on a set A is **transitive** if $(a, b) \in R$ and $(b, c) \in R$ implies $(a, c) \in R$

Step 2

2 of 6

SOLUTION

$$A = \{0, 1, 2, 3\}$$

$$R_5 = \{(0, 0), (0, 1), (0, 2), (1, 2)\}$$

(a) **Directed graph**

We note that A contains 4 elements and thus we will draw 4 points.

We label these points 0, 1, 2, 3 (which are the elements of A).

For every element $(x, y) \in R$ with $x \neq y$, we draw an arrow from x to y.

For every element $(x, x) \in R$, we draw a loop at the point x.

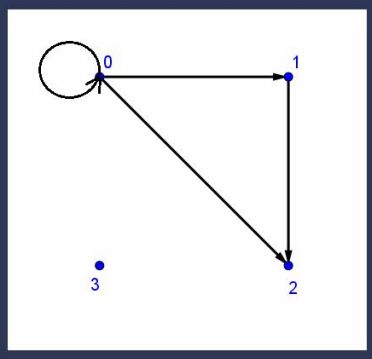

Step 3

3 of 6

(b) The relation R_5 is reflective if $(a, a) \in R_5$ for every element $a \in A$.

Since $A = \{0, 1, 2, 3\}$, R_5 is reflexive if it contains $(0, 0), (1, 1), (2, 2), (3, 3)$.

We note that R_5 does not contain $(1, 1)$ and thus R_5 is **not reflexive**.

Step 4

4 of 6

(c) The relation R_5 on a set A is **symmetric** if $(b, a) \in R_5$ whenever $(a, b) \in R_5$

We note that $(0, 1) \in R_5$ while $(1, 0) \notin R_5$ and thus R_5 is **not symmetric**.

Step 5

5 of 6

(d) The relation R_5 on a set A is **transitive** if $(a, b) \in R_5$ and $(b, c) \in R_5$ implies $(a, c) \in R_5$

We note that $(0, 1) \in R_5$ and $(1, 2) \in R_5$, while $(0, 2) \notin R_5$ and thus R_5 is **transitive** as there are no other pairs for which transitivity can be checked (excluding loops).

Result

6 of 6

(a) See directed graph

(b) Not reflexive

(c) Not symmetric

(d) Transitive

Exercise 4 Exercise 6

Exercise 6

Chapter 8, section 8.2, page 503

Discrete Mathematics with Applications
ISBN: 9781337694193
Table of contents

Solution

Verified

Step 1

1 of 6

DEFINITIONS

A relation R on a set A is **reflexive** if $(a, a) \in R$ for every element $a \in A$.

A relation R on a set A is **symmetric** if $(b, a) \in R$ whenever $(a, b) \in R$

A relation R on a set A is **transitive** if $(a, b) \in R$ and $(b, c) \in R$ implies $(a, c) \in R$

Step 2

2 of 6

SOLUTION

$$A = \{0, 1, 2, 3\}$$

$$R_6 = \{(0, 1), (0, 2)\}$$

(a) **Directed graph**

We note that A contains 4 elements and thus we will draw 4 points.

We label these points 0, 1, 2, 3 (which are the elements of A).

For every element $(x, y) \in R$ with $x \neq y$, we draw an arrow from x to y.

For every element $(x, x) \in R$, we draw a loop at the point x.

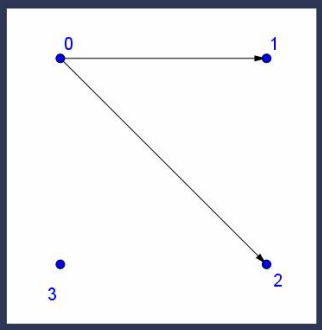

Step 3

3 of 6

(b) The relation R_6 is reflective if $(a, a) \in R_6$ for every element $a \in A$.

Since $A = \{0, 1, 2, 3\}$, R_6 is reflexive if it contains $(0, 0), (1, 1), (2, 2), (3, 3)$.

We note that R_6 does not contain $(0, 0)$ and thus R_6 is **not reflexive**.

Step 4

4 of 6

(c) The relation R_6 on a set A is **symmetric** if $(b, a) \in R_6$ whenever $(a, b) \in R_6$

We note that $(0, 1) \in R_6$ while $(1, 0) \notin R_6$ and thus R_6 is **not symmetric**.

Step 5

5 of 6

(d) The relation R_6 on a set A is **transitive** if $(a, b) \in R_6$ and $(b, c) \in R_6$ implies $(a, c) \in R_6$

We note that the if-statement "$(a, b) \in R_6$ and $(b, c) \in R_6$" is never true (as there exists no such pairs in R_6). However an if-then statement is always true when the if-statement is false and thus R_6 is **transitive**.

Result

6 of 6

(a) See directed graph

(b) Not reflexive

(c) Not symmetric

(d) Transitive

Exercise 5 Exercise 7

Exercise 7

Chapter 8, section 8.2, page 503

Discrete Mathematics with Applications
ISBN: 9781337694193

Table of contents

Solution

Verified

Step 1

1 of 6

DEFINITIONS

A relation R on a set A is **reflexive** if $(a, a) \in R$ for every element $a \in A$.

A relation R on a set A is **symmetric** if $(b, a) \in R$ whenever $(a, b) \in R$

A relation R on a set A is **transitive** if $(a, b) \in R$ and $(b, c) \in R$ implies $(a, c) \in R$

Step 2

2 of 6

SOLUTION

$$A = \{0, 1, 2, 3\}$$

$$R_7 = \{(0, 3), (2, 3)\}$$

(a) **Directed graph**

We note that A contains 4 elements and thus we will draw 4 points.

We label these points 0, 1, 2, 3 (which are the elements of A).

For every element $(x, y) \in R$ with $x \neq y$, we draw an arrow from x to y.

For every element $(x, x) \in R$, we draw a loop at the point x.

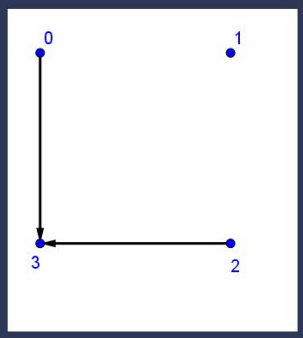

Step 3

3 of 6

(b) The relation R_7 is reflective if $(a, a) \in R_7$ for every element $a \in A$.

Since $A = \{0, 1, 2, 3\}$, R_7 is reflexive if it contains $(0, 0), (1, 1), (2, 2), (3, 3)$.

We note that R_7 does not contain $(0, 0)$ and thus R_7 is **not reflexive**.

Step 4

4 of 6

(c) The relation R_7 on a set A is **symmetric** if $(b, a) \in R_7$ whenever $(a, b) \in R_7$

We note that $(0, 3) \in R_7$ while $(3, 0) \notin R_7$ and thus R_7 is **not symmetric**.

Step 5

5 of 6

(d) The relation R_7 on a set A is **transitive** if $(a, b) \in R_7$ and $(b, c) \in R_7$ implies $(a, c) \in R_7$

We note that the if-statement "$(a, b) \in R_7$ and $(b, c) \in R_7$" is never true (as there exists no such pairs in R_7). However an if-then statement is always true when the if-statement is false and thus R_7 is **transitive**.

Result

6 of 6

(a) See directed graph

(b) Not reflexive

(c) Not symmetric

(d) Transitive

Exercise 6 Exercise 8

Exercise 8

Chapter 8, section 8.2, page 503

Discrete Mathematics with Applications
ISBN: 9781337694193
Table of contents

Solution

Verified

Step 1

1 of 6

DEFINITIONS

A relation R on a set A is **reflexive** if $(a, a) \in R$ for every element $a \in A$.

A relation R on a set A is **symmetric** if $(b, a) \in R$ whenever $(a, b) \in R$

A relation R on a set A is **transitive** if $(a, b) \in R$ and $(b, c) \in R$ implies $(a, c) \in R$

Step 2

2 of 6

SOLUTION

$$A = \{0, 1, 2, 3\}$$
$$R_8 = \{(0, 0), (1, 1)\}$$

(a) **Directed graph**

We note that A contains 4 elements and thus we will draw 4 points.

We label these points 0, 1, 2, 3 (which are the elements of A).

For every element $(x, y) \in R$ with $x \neq y$, we draw an arrow from x to y.

For every element $(x, x) \in R$, we draw a loop at the point x.

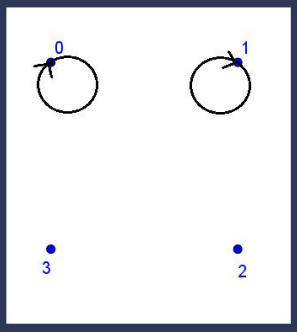

Step 3

3 of 6

(b) The relation R_8 is reflexive if $(a, a) \in R_8$ for every element $a \in A$.

Since $A = \{0, 1, 2, 3\}$, R_8 is reflexive if it contains $(0, 0), (1, 1), (2, 2), (3, 3)$.

We note that R_8 does not contain $(2, 2)$ and thus R_8 is **not reflexive**.

Step 4

4 of 6

(c) The relation R_8 on a set A is **symmetric** if $(b, a) \in R_8$ whenever $(a, b) \in R_8$

We note that $(0, 0) \in R_8$ while $(0, 0) \in R_8$ and $(1, 1) \in R_8$ while $(1, 1) \in R_8$. There are no other elements in R_8 and thus R_8 is **symmetric**.

Step 5

5 of 6

(d) The relation R_8 on a set A is **transitive** if $(a, b) \in R_8$ and $(b, c) \in R_8$ implies $(a, c) \in R_8$

We note that the if-statement "$(a, b) \in R_8$ and $(b, c) \in R_8$" is never true for two distinct pairs (as there exists no other such pairs in R_8). However an if-then statement is always true when the if-statement is false and thus R_8 is **transitive**.

Result

6 of 6

(a) See directed graph

(b) Not reflexive

(c) Symmetric

(d) Transitive

Exercise 7 Exercise 9

Exercise 9

Chapter 8, section 8.2, page 503

Discrete Mathematics with Applications
ISBN: 9781337694193

Table of contents

Solution

Verified

Step 1

1 of 5

DEFINITIONS

A relation R on a set A is **reflexive** if $(a, a) \in R$ for every element $a \in A$.

A relation R on a set A is **symmetric** if $(b, a) \in R$ whenever $(a, b) \in R$

A relation R on a set A is **transitive** if $(a, b) \in R$ and $(b, c) \in R$ implies $(a, c) \in R$

Step 2

2 of 5

SOLUTION

$$A = \mathbf{R}$$

$$R = \{x, y \in \mathbf{R} | x \geq y\}$$

$$\textbf{Reflexive?}$$

The relation R is reflective if $(a, a) \in R$ for every element $a \in A$.

Since $A = \mathbf{R}$, R is reflexive if it contains (x, x) for all $x \in \mathbf{R}$.

We note that R contains (x, x) as $x \geq x$ for all $x \in \mathbf{R}$ and thus R is **reflexive**.

Step 3

3 of 5

$$\textbf{Symmetric?}$$

The relation R on a set A is **symmetric** if $(b, a) \in R$ whenever $(a, b) \in R$

We note that $(1, 0) \in R$ as $1 \geq 0$, but $(0, 1) \notin R$ as $1 <$ and thus R is **not symmetric**.

Step 4

4 of 5

$$\textbf{Transitive?}$$

The relation R on a set A is **transitive** if $(a, b) \in R$ and $(b, c) \in R$ implies $(a, c) \in R$

Let $(a, b) \in R$ and $(b, c) \in R$. By definition of R:

$$a \geq b$$

$$b \geq c$$

We then note that $a \geq b \geq c$ and thus $a \geq c$ is also true, which implies that $(a, c) \in R$. By the definition of transitive, R is then **transitive**.

Result

5 of 5

Reflexive

Not symmetric

Transitive

Exercise 8 Exercise 10

Exercise 10

Chapter 8, section 8.2, page 503

Discrete Mathematics with Applications
ISBN: 9781337694193

Table of contents

Solution

Verified

Step 1

1 of 4

C is not reflexive since $1 \not C 1$ (notice $1^2 + 1^2 \neq 1$).

Step 2

2 of 4

C is symmetric since xCy implies yCx (notice that if $x^2 + y^2 = 1$, then $y^2 + x^2 = 1$).

Step 3

3 of 4

C is not transitive since $1C0$ and $0C1$ do not imply $1C1$ (notice that $1^2 + 0^2 = 1$ and $0^2 + 1^2 = 1 \not\Rightarrow 1^2 + 1^2 = 1$).

Result

4 of 4

Not reflexive

Symmetric

Not transitive

Exercise 9 Exercise 11

Exercise 11

Chapter 8, section 8.2, page 503

Discrete Mathematics with Applications
ISBN: 9781337694193

Table of contents

Solution

Verified

Step 1

1 of 5

DEFINITIONS

A relation R on a set A is **reflexive** if $(a, a) \in R$ for every element $a \in A$.

A relation R on a set A is **symmetric** if $(b, a) \in R$ whenever $(a, b) \in R$

A relation R on a set A is **transitive** if $(a, b) \in R$ and $(b, c) \in R$ implies $(a, c) \in R$

Step 2

2 of 5

SOLUTION

$$A = \mathbf{R}$$

$$D = \{x, y \in \mathbf{R} | xy \geq 0\}$$

$$\textbf{Reflexive?}$$

The relation D is reflective if $(a, a) \in D$ for every element $a \in A$.

Since $A = \mathbf{R}$, D is reflexive if it contains (x, x) for all $x \in \mathbf{R}$.

We note that D contains (x, x) as $x \cdot x = x^2 \geq 0$ for all $x \in \mathbf{R}$ (as the square of a real number is always nonnegative) and thus D is **reflexive**.

Step 3

3 of 5

$$\textbf{Symmetric?}$$

The relation D on a set A is **symmetric** if $(b, a) \in D$ whenever $(a, b) \in D$

Let us assume that $(a, b) \in D$. By definition of D:

$$ab \geq 0$$

By commutative property of multiplication:

$$ba \geq 0$$

This last inequality then implies that $(b, a) \in D$ and thus D is **symmetric**.

Step 4

4 of 5

$$\textbf{Transitive?}$$

The relation D on a set A is **transitive** if $(a, b) \in D$ and $(b, c) \in D$ implies $(a, c) \in D$

We note that $(2, 0) \in D$, because $2 \cdot 0 = 0 \geq 0$.

We also note that $(0, -1) \in D$, because $0 \cdot (-1) = 0 \geq 0$.

However, $(2, -1) \notin D$, because $2 \cdot (-1) = -2 < 0$

We then note that $(2, 0) \in D$ and $(0, -1) \in D$, while $(2, -1) \notin D$ and thus D is then **not transitive**.

Result

5 of 5

Reflexive

Symmetric

Not transitive

Exercise 10 Exercise 12

Exercise 12

Chapter 8, section 8.2, page 503

Discrete Mathematics with Applications
ISBN: 9781337694193

Table of contents

Solution

Verified

Step 1

1 of 5

DEFINITIONS

A relation R on a set A is **reflexive** if $(a, a) \in R$ for every element $a \in A$.

A relation R on a set A is **symmetric** if $(b, a) \in R$ whenever $(a, b) \in R$

A relation R on a set A is **transitive** if $(a, b) \in R$ and $(b, c) \in R$ implies $(a, c) \in R$

a **divides** b if there exists an integer c such that $b = ac$

Step 2

2 of 5

SOLUTION

$$A = \mathbf{Z}$$

$$E = \{x, y \in \mathbf{Z} |\ 2|(m - n)\ \}$$

Reflexive?

The relation E is reflective if $(a, a) \in E$ for every element $a \in A$.

Since $A = \mathbf{Z}$, E is reflexive if it contains (x, x) for all $x \in \mathbf{Z}$.

We note that E contains (x, x) because $x - x = 0$ and 2 divides 0 (as $2 \cdot 0 = 0$ with 0 an integer) and thus E is **reflexive**.

Step 3

3 of 5

Symmetric?

The relation E on a set A is **symmetric** if $(b, a) \in E$ whenever $(a, b) \in E$

Let us assume that $(a, b) \in E$. By definition of E:

$$2|(a - b)$$

By the definition of divides, there exists an integer c such that:

$$(a - b) = 2c$$

Multiply each side by -1:

$$-(a - b) = -2c$$

Distributive property:

$$b - a = 2(-c)$$

This last inequality then implies that $2|(b - a)$ since $-c$ is an integer (as c is an integer), which then implies $(b, a) \in E$ and thus E is **symmetric**.

Step 4

4 of 5

Transitive?

The relation E on a set A is **transitive** if $(a, b) \in E$ and $(b, c) \in E$ implies $(a, c) \in E$

Let $(a, b) \in E$ and $(b, c) \in E$. By the definition of E:

$$2|(a - b)$$

$$2|(b - c)$$

By the definition of divides, there exist integers d and e such that:

$$a - b = 2d$$

$$b - c = 2e$$

Add the previous two equations:

$$(a - b) + (b - c) = 2d + 2e$$

Combine like terms:

$$a - c = 2d + 2e$$

Use distributive property:

$$a - c = 2(d + e)$$

We then note that $2|(a - c)$ since $d + e$ is an integer (as d and e are both integers). This then also implies $(a, c) \in E$ and thus E is **transitive**.

Result

5 of 5

Reflexive

Symmetric

Transitive

Exercise 11 Exercise 13

Exercise 13

Chapter 8, section 8.2, page 503

Discrete Mathematics with Applications
ISBN: 9781337694193

Table of contents

Solution

Verified

Step 1

1 of 5

DEFINITIONS

A relation R on a set A is **reflexive** if $(a, a) \in R$ for every element $a \in A$.

A relation R on a set A is **symmetric** if $(b, a) \in R$ whenever $(a, b) \in R$

A relation R on a set A is **transitive** if $(a, b) \in R$ and $(b, c) \in R$ implies $(a, c) \in R$

a **divides** b if there exists an integer c such that $b = ac$

Step 2

2 of 5

SOLUTION

$$A = \mathbf{Z}$$

$$E = \{x, y \in \mathbf{Z} |\ 5|(m - n)\ \}$$

Reflexive?

The relation E is reflective if $(a, a) \in E$ for every element $a \in A$.

Since $A = \mathbf{Z}$, E is reflexive if it contains (x, x) for all $x \in \mathbf{Z}$.

We note that E contains (x, x) because $x - x = 0$ and 5 divides 0 (as $5 \cdot 0 = 0$ with 0 an integer) and thus E is **reflexive**.

Step 3

3 of 5

Symmetric?

The relation E on a set A is **symmetric** if $(b, a) \in E$ whenever $(a, b) \in E$

Let us assume that $(a, b) \in E$. By definition of E:

$$5|(a - b)$$

By the definition of divides, there exists an integer c such that:

$$(a - b) = 5c$$

Multiply each side by -1:

$$-(a - b) = -5c$$

Distributive property:

$$b - a = 5(-c)$$

This last inequality then implies that $5|(b - a)$ since $-c$ is an integer (as c is an integer), which then implies $(b, a) \in E$ and thus E is **symmetric**.

Step 4

4 of 5

Transitive?

The relation E on a set A is **transitive** if $(a, b) \in E$ and $(b, c) \in E$ implies $(a, c) \in E$

Let $(a, b) \in E$ and $(b, c) \in E$. By the definition of E:

$$5|(a - b)$$

$$5|(b - c)$$

By the definition of divides, there exist integers d and e such that:

$$a - b = 5d$$

$$b - c = 5e$$

Add the previous two equations:

$$(a - b) + (b - c) = 5d + 5e$$

Combine like terms:

$$a - c = 5d + 5e$$

Use distributive property:

$$a - c = 5(d + e)$$

We then note that $5|(a - c)$ since $d + e$ is an integer (as d and e are both integers). This then also implies $(a, c) \in E$ and thus E is **transitive**.

Result

5 of 5

Reflexive

Symmetric

Transitive

Exercise 12 Exercise 14

Exercise 14

Chapter 8, section 8.2, page 503

Discrete Mathematics with Applications
ISBN: 9781337694193

Table of contents

Solution

Verified

Step 1

1 of 5

DEFINITIONS

A relation R on a set A is **reflexive** if $(a, a) \in R$ for every element $a \in A$.

A relation R on a set A is **symmetric** if $(b, a) \in R$ whenever $(a, b) \in R$

A relation R on a set A is **transitive** if $(a, b) \in R$ and $(b, c) \in R$ implies $(a, c) \in R$

n is **odd** if and only if there exists an integer k such that $n = 2k + 1$

Step 2

2 of 5

SOLUTION

$$A = \mathbf{Z}$$

$$O = \{x, y \in \mathbf{Z} |\ (m - n) \text{ is odd } \}$$

Reflexive?

The relation O is reflective if $(a, a) \in O$ for every element $a \in A$.

Since $A = \mathbf{Z}$, O is reflexive if it contains (x, x) for all $x \in \mathbf{Z}$.

We note that O does not contain (x, x) because $x - x = 0$ and 0 is not odd, thus E is **not reflexive**.

Step 3

3 of 5

Symmetric?

The relation O on a set A is **symmetric** if $(b, a) \in O$ whenever $(a, b) \in O$

Let us assume that $(a, b) \in O$. By definition of O:

$$a - b \text{ is odd}$$

By the definition of odd, there exists an integer c such that:

$$a - b = 2c + 1$$

Multiply each side by -1:

$$-(a - b) = -(2c + 1)$$

Distributive property:

$$b - a = -2c - 1$$

Or equivalently:

$$b - a = 2(-c - 1) + 1$$

This last equality then implies that $b - a$ is odd since $-c$ is an integer (as c is an integer), which then implies $(b, a) \in O$ and thus O is **symmetric**.

Step 4

4 of 5

Transitive?

The relation O on a set A is **transitive** if $(a, b) \in O$ and $(b, c) \in O$ implies $(a, c) \in O$

We then note that $(1, 2) \in O$ and $(2, 3) \in O$ since $1 - 2 = -1$ is odd and $2 - 3 = -1$ is odd. However, $(1, 3) \notin O$ as $1 - 3 = -2$ is not odd and thus O is **not transitive**.

Result

5 of 5

Not reflexive

Symmetric

Not transitive

Exercise 13 Exercise 15

Exercise 15

Chapter 8, section 8.2, page 503

Discrete Mathematics with Applications
ISBN: 9781337694193

Table of contents

Solution

Verified

Step 1

1 of 3

Solution:

The observed relation D is the "divides" relation on $\mathbb{Z}^+$. In other words, the ordered pair $(m, n) \in \mathbb{Z}^+ \times \mathbb{Z}^+$ belongs to D if and only if $m|n$, or equivalently, ir there is a positive integer k so that $n = m \cdot k$.

$\boxed{1)}$ Reflexivity of a relation R means that for every element a of the set A, over which the relation is defined, it holds that aRa. In our case, it would mean that for every positive integer n it holds that $n|n$. This is true, since for any $n \in \mathbb{Z}^+$ there is a positive integer 1 so that $n = 1 \cdot n$.

$\boxed{2)}$ Relation R (defined on A) is symmetric if for every two elements $a, b \in A$ it holds that

$$aRb \implies bRa$$

In this exercise, symmetric property would mean that for every two $m, n \in \mathbb{Z}^+$ it holds that $m|n \implies n|m$. This relation is not symmetric because if we observe the pair of different integers where one is divisible by the other (from D), for instance $(1, 2)$, we have this:

$$1|2 \text{ but } 2 \nmid 1$$

therefore, if we denote $a = 1$ and $b = 2$ we have the false implication

$$1|2 \implies 2|1$$

because the hypothesis is true and the conclusion is false. Really, there should exist an integer k so that $1 = 2 \cdot k$. If we solve this equation for k, we have that $k = \frac{1}{2}$ but this is not an integer.

There are many pairs that do not satisfy this symmetric condition, such as:

$$(1, n), n \in \mathbb{Z}^+ \ ; \ (2, 2k), k \in \mathbb{Z}^+ \ldots$$

Step 2

2 of 3

$\boxed{3)}$ The transitivity property of a relation R defined on A means that for any three elements $a, b, c \in A$ the following implication is true:

$$aRb \wedge bRc \implies aRc$$

In our case, this translated into: For every $m, n, p \in \mathbb{Z}^+$ it holds that :

$$m|n \wedge n|p \implies m|p$$

This is true. Really, the fact that $m|n$ means that there is a positive integer q so that $n = m \cdot q$. the fact that $n|p$ means that there is a positive integer r so that $p = n \cdot r$. I we now combine those equations, we have this:

$$p = n \cdot r = (m \cdot q) \cdot r \overset{\text{Associative law for multiplication}}{=} m \cdot \underbrace{(q \cdot r)}_{t}$$

Since q and r are positive integers, we have that $q \cdot r$ is also positive integer. Therefore, there is a positive integer $t = q \cdot r$ so that $p = m \cdot t$, which is equivalent to $m|p$.

We proved that for arbitrary three elements of $\mathbb{Z}^+$ the wanted implication is true, so our relation D is transitive.

Result

3 of 3

The observed relation D is reflexive and transitive, but not symmetric. See above for detailed explanation.

Exercise 14 Exercise 16

Exercise 16

Chapter 8, section 8.2, page 503

Discrete Mathematics with Applications
ISBN: 9781337694193

Table of contents

Solutions

Verified

Solution A Solution B

Step 1

1 of 2

The relation A is defined as

$$A = \{x, y \in \mathbf{R} \mid |x| = |y|\}$$

The relation A is reflexive if, and only if, $m\ A\ m$ for every $m \in \mathbf{R}$.

A is reflexive : For every real number m,

$$|m| = |m|$$

Hence, $m\ A\ m$ by the definition of A.

The relation A is symmetric if for every $m, n \in \mathbf{R}$, if $m\ A\ n$ then $n\ A\ m$.

A is symmetric : For every real number m and n, if $|m| = |n|$, then by the mathematical equality, we have

$$|n| = |m|$$

Hence, if $m\ A\ n$, then $n\ A\ m$ by the definition of A.

The relation A is transitive if for every $l, m, n \in \mathbf{R}$, if $l\ A\ m$ and $m\ A\ n$, then $l\ A\ n$.

A is transitive : For every real number m and n, if

$$|l| = |m| \qquad (1)$$

and

$$|m| = |n| \qquad (2)$$

then, substituting (2) in (1) gives

$$|l| = |n|$$

Hence, if $l\ A\ m$ and $m\ A\ n$, then $l\ A\ n$ by the definition of A.

Result

2 of 2

Reflexive, Symmetric, Transitive

Exercise 15 Exercise 17

Exercise 16

Chapter 8, section 8.2, page 503

Discrete Mathematics with Applications
ISBN: 9781337694193

Table of contents

Solutions

Verified

Solution A Solution B

Step 1

1 of 4

A.) $|x| = |x|$ for all $x \in \mathbb{R}$ and $|y| = |y|$ for all $y \in \mathbb{Z}$

Step 2

2 of 4

B.) For any arb. but particular $x, y \in \mathbb{R}$, if $(x, y) \in R$ $|x| = |y|$ and by basic math $|y| = |x|$

Step 3

3 of 4

C.) By def of transitivity $\forall x, y, z \in \mathbb{R}$, if $(x, y) \in R \wedge (y, z) \in R \rightarrow (x, z) \in R$. So if $|x| = |y|$ and $|y| = |z|$, by substitution $|x| = |z|$

Result

4 of 4

Is Reflexive. Is Symmetric. Is Transitive. Inside for details

Exercise 15 Exercise 17

Exercise 17

Chapter 8, section 8.2, page 503

Discrete Mathematics with Applications
ISBN: 9781337694193

Table of contents

Solution

Verified

Step 1

1 of 4

P is not reflexive since $1 \not P 1$ (notice that there is no prime number divides 1).

Step 2

2 of 4

P is symmetric since mPn implies nPm (notice that if p divides m and n, then p divides n and m).

Step 3

3 of 4

P is not transitive since mPn and nPq do not imply mPq (for example, let $m = 15$, $n = 21$ and $q = 49$: $15P21$ since 3 divides both 15 and 21; $21P49$ since 7 divides both 21 and 49; however, there does not exist a prime number that divides both 15 and 49).

Result

4 of 4

Not reflexive

Symmetric

Not transitive

Exercise 16 Exercise 18

Exercise 18

Chapter 8, section 8.2, page 503

Discrete Mathematics with Applications
ISBN: 9781337694193

Table of contents

Solution

Verified

Step 1

1 of 5

DEFINITIONS

A relation R on a set A is **reflexive** if $(a, a) \in R$ for every element $a \in A$.

A relation R on a set A is **symmetric** if $(b, a) \in R$ whenever $(a, b) \in R$

A relation R on a set A is **transitive** if $(a, b) \in R$ and $(b, c) \in R$ implies $(a, c) \in R$

A real number r is **rational** if and only if there exists two integer a and b such that $r = \frac{a}{b}$ $(b \neq 0)$.

Step 2

2 of 5

SOLUTION

$$A = \mathbf{R}$$

$$Q = \{x, y \in \mathbf{R} |\ x - y \text{ is rational } \}$$

$$\textbf{Reflexive?}$$

The relation Q is reflective if $(a, a) \in Q$ for every element $a \in A$.

Since $A = \mathbf{Z}$, Q is reflexive if it contains (x, x) for all $x \in \mathbf{R}$.

We note that Q contains (x, x) because $x - x = 0$ and 0 is rational (since $0 = \frac{0}{1}$), thus Q is **reflexive**.

Step 3

3 of 5

$$\textbf{Symmetric?}$$

The relation Q on a set A is **symmetric** if $(b, a) \in Q$ whenever $(a, b) \in Q$

Let us assume that $(a, b) \in Q$. By definition of Q:

$$a - b \text{ is rational}$$

By the definition of rational, there exist integers c and d such that:

$$a - b = \frac{c}{d}$$

Multiply each side by -1:

$$-(a - b) = -\frac{c}{d}$$

Distributive property:

$$b - a = \frac{-c}{d}$$

This last inequality then implies that $b - a$ is irrational since $\frac{-c}{d}$ is rational (as $-c$ is an integer and d is an integer), which then implies $(b, a) \in Q$ and thus Q is **symmetric**.

Step 4

4 of 5

$$\textbf{Transitive?}$$

The relation Q on a set A is **transitive** if $(a, b) \in Q$ and $(b, c) \in Q$ implies $(a, c) \in Q$

Let $(a, b) \in Q$ and $(b, c) \in Q$. By the definition of Q:

$$a - b \text{ is rational}$$

$$b - c \text{ is rational}$$

By the definition of rational, there exist integers d, e, f, g such that:

$$a - b = \frac{d}{e}$$

$$b - c = \frac{f}{g}$$

Add the previous two equations:

$$(a - b) + (b - c) = \frac{d}{e} + \frac{f}{g}$$

Combine like terms:

$$a - c = \frac{dg + ef}{eg}$$

We then note that $a - c$ is rational since $\frac{dg + ef}{eg}$ is rational (as d, e, f and g are integers and thus $df + ef$ and eg are also integers). This then also implies $(a, c) \in Q$ and thus Q is **transitive**.

Result

5 of 5

Reflexive

Symmetric

Transitive

Exercise 17 Exercise 19

Exercise 19

Chapter 8, section 8.2, page 503

Discrete Mathematics with Applications
ISBN: 9781337694193
Table of contents

Solution Verified

Step 1

1 of 5

DEFINITIONS

A relation R on a set A is **reflexive** if $(a, a) \in R$ for every element $a \in A$.

A relation R on a set A is **symmetric** if $(b, a) \in R$ whenever $(a, b) \in R$

A relation R on a set A is **transitive** if $(a, b) \in R$ and $(b, c) \in R$ implies $(a, c) \in R$

A real number r is **rational** if and only if there exists two integer a and b such that $r = \frac{a}{b}$ $(b \neq 0)$. A real number r is **irrational** if r is not rational.

Step 2

2 of 5

SOLUTION

$$A = \mathbf{R}$$

$$I = \{x, y \in \mathbf{R} |\ x - y \text{ is irrational } \}$$

$$\textbf{Reflexive?}$$

The relation I is reflective if $(a, a) \in I$ for every element $a \in A$.

Since $A = \mathbf{Z}$, I is reflexive if it contains (x, x) for all $x \in \mathbf{R}$.

We note that I does not contain (x, x) because $x - x = 0$ and 0 is rational (since $0 = \frac{0}{1}$), thus I is **not reflexive**.

Step 3

3 of 5

$$\textbf{Symmetric?}$$

The relation I on a set A is **symmetric** if $(b, a) \in I$ whenever $(a, b) \in I$

Let us assume that $(a, b) \in I$. By definition of I:

$$a - b \text{ is irrational}$$

Let us assume that $b - a$ is rational. By the definition of rational, there exist integers c and d such that:

$$b - a = \frac{c}{d}$$

Multiply each side by -1:

$$-(b - a) = -\frac{c}{d}$$

Distributive property:

$$a - b = \frac{-c}{d}$$

This last inequality then implies that $a - b$ is irrational since $\frac{-c}{d}$ is rational (as $-c$ is an integer and d is an integer). Thus our assumption that $b - a$ is rational is incorrect and thus $b - a$ is irrational. This then implies $(b, a) \in I$ and thus I is **symmetric**.

Step 4

4 of 5

$$\textbf{Transitive?}$$

The relation I on a set A is **transitive** if $(a, b) \in I$ and $(b, c) \in I$ implies $(a, c) \in I$

Let us consider $a = \sqrt{2}$, $b = 1$ and $c = \sqrt{2}$. We then note

$$a - b = \sqrt{2} - 1 \text{ is irrational}$$

$$b - c = 1 - \sqrt{2} \text{ is irrational}$$

However, $a - c = \sqrt{2} - \sqrt{2} = 0$ is rational (as $0 = \frac{0}{1}$ with 0 and 1 an integer). This then also implies that I is **not transitive**.

Result

5 of 5

Not reflexive

Symmetric

Not transitive

Exercise 18 Exercise 20

Exercise 20

Chapter 8, section 8.2, page 503

Discrete Mathematics with Applications
ISBN: 9781337694193

Table of contents

Solution

Verified

Step 1

1 of 5

DEFINITIONS

A relation R on a set A is **reflexive** if $(a, a) \in R$ for every element $a \in A$.

A relation R on a set A is **symmetric** if $(b, a) \in R$ whenever $(a, b) \in R$

A relation R on a set A is **transitive** if $(a, b) \in R$ and $(b, c) \in R$ implies $(a, c) \in R$

A real number r is **rational** if and only if there exists two integer a and b such that $r = \frac{a}{b}$ $(b \neq 0)$. A real number r is **irrational** if r is not rational.

Step 2

2 of 5

SOLUTION

$$X = \{a, b, c\}$$

$$A = \mathcal{P}(X)$$

$$E = \{B, C \in \mathcal{P}(X) |\ B \text{ has the same number of elements as } C\ \}$$

Reflexive?

The relation E is reflective if $(B, B) \in E$ for every element $a \in A$.

Since $A = \mathcal{P}(X)$, E is reflexive if it contains (B, B) for all $B \in \mathcal{P}(X)$.

We note that E contains (B, B) because a set always has the same number of elements as itself and thus E is **reflexive**.

Step 3

3 of 5

Symmetric?

The relation E on a set A is **symmetric** if $(C, B) \in E$ whenever $(B, C) \in E$

Let us assume that $(B, C) \in E$. By definition of E:

$$B \text{ and } C \text{ have the same number of elements.}$$

However, this is equivalent with:

$$C \text{ and } B \text{ have the same number of elements.}$$

This last statement then implies that $(C, B) \in E$ and thus E is **symmetric**.

Step 4

4 of 5

Transitive?

The relation E on a set A is **transitive** if $(B, C) \in E$ and $(C, D) \in E$ implies $(B, D) \in E$

Let us assume that $(B, C) \in E$ and $(C, D) \in E$. By the definition of E:

$$B \text{ and } C \text{ have the same number of elements.}$$

$$C \text{ and } D \text{ have the same number of elements.}$$

This then also implies:

$$B \text{ and } D \text{ have the same number of elements.}$$

However, this then implies that $(B, D) \in E$ and thus E is **transitive**.

Result

5 of 5

Reflexive

Symmetric

Transitive

Exercise 19 Exercise 21

Exercise 21

Chapter 8, section 8.2, page 504

Discrete Mathematics with Applications
ISBN: 9781337694193

Table of contents

Solution

Verified

Step 1

1 of 5

DEFINITIONS

A relation R on a set A is **reflexive** if $(a, a) \in R$ for every element $a \in A$.

A relation R on a set A is **symmetric** if $(b, a) \in R$ whenever $(a, b) \in R$

A relation R on a set A is **transitive** if $(a, b) \in R$ and $(b, c) \in R$ implies $(a, c) \in R$

Step 2

2 of 5

SOLUTION

$$X = \{a, b, c\}$$

$$A = \mathcal{P}(X)$$

$$E = \{B, C \in \mathcal{P}(X) |\ B \text{ has less elements than } C\ \}$$

Reflexive?

The relation E is reflective if $(B, B) \in E$ for every element $a \in A$.

Since $A = \mathcal{P}(X)$, E is reflexive if it contains (B, B) for all $B \in \mathcal{P}(X)$.

We note that E does not contain (B, B) because a set never has less elements than itself and thus E is **not reflexive**.

Step 3

3 of 5

Symmetric?

The relation E on a set A is **symmetric** if $(C, B) \in E$ whenever $(B, C) \in E$

Let us assume that $(B, C) \in E$. By definition of E:

$$B \text{ has less elements than } C.$$

However, the statement "C has less elements than B" is then incorrect and thus $(C, B) \notin E$, which implies that E is **not symmetric**.

Step 4

4 of 5

Transitive?

The relation E on a set A is **transitive** if $(B, C) \in E$ and $(C, D) \in E$ implies $(B, D) \in E$

Let us assume that $(B, C) \in E$ and $(C, D) \in E$. By the definition of E:

$$B \text{ has less elements than } C.$$

$$C \text{ has less elements than } D.$$

This then also implies:

$$B \text{ has less elements than } D.$$

However, this then implies that $(B, D) \in E$ and thus E is **transitive**.

Result

5 of 5

Not reflexive

Not symmetric

Transitive

Exercise 20 Exercise 22

Exercise 22

Chapter 8, section 8.2, page 504

Discrete Mathematics with Applications
ISBN: 9781337694193

Table of contents

Solution

Verified

Step 1

1 of 5

DEFINITIONS

A relation R on a set A is **reflexive** if $(a, a) \in R$ for every element $a \in A$.

A relation R on a set A is **symmetric** if $(b, a) \in R$ whenever $(a, b) \in R$

A relation R on a set A is **transitive** if $(a, b) \in R$ and $(b, c) \in R$ implies $(a, c) \in R$

Step 2

2 of 5

SOLUTION

$$X = \{a, b, c\}$$

$$A = \mathcal{P}(X)$$

$$E = \{B, C \in \mathcal{P}(X) |\ B \text{ has a different number of elements than } C\ \}$$

Reflexive?

The relation E is reflective if $(B, B) \in E$ for every element $a \in A$.

Since $A = \mathcal{P}(X)$, E is reflexive if it contains (B, B) for all $B \in \mathcal{P}(X)$.

We note that E does not contain (B, B) because a set never a different number of elements than itself and thus E is **not reflexive**.

Step 3

3 of 5

Symmetric?

The relation E on a set A is **symmetric** if $(C, B) \in E$ whenever $(B, C) \in E$

Let us assume that $(B, C) \in E$. By definition of E:

$$B \text{ has a different number of elements than } C.$$

This is then equivalent with:

$$C \text{ has a different number of elements than } B.$$

Thus $(C, B) \in E$, which implies that E is **symmetric**.

Step 4

4 of 5

Transitive?

The relation E on a set A is **transitive** if $(B, C) \in E$ and $(C, D) \in E$ implies $(B, D) \in E$

Let us assume that $(B, C) \in E$ and $(C, D) \in E$. By the definition of E:

$$B \text{ has a different number of elements than } C.$$

$$C \text{ has a different number of elements than } D.$$

However, this does not imply that B and D have a different number of elements, as it is possible that they have the same number of elements. This then implies that $(B, D) \notin E$ for some choices of B and d, thus E is **not transitive**.

Result

5 of 5

Not reflexive

Symmetric

Not transitive

Exercise 21 Exercise 23

Exercise 23

Chapter 8, section 8.2, page 504

Discrete Mathematics with Applications
ISBN: 9781337694193
Table of contents

Solution

Verified

Step 1

1 of 5

DEFINITIONS

A relation R on a set A is **reflexive** if $(a, a) \in R$ for every element $a \in A$.

A relation R on a set A is **symmetric** if $(b, a) \in R$ whenever $(a, b) \in R$

A relation R on a set A is **transitive** if $(a, b) \in R$ and $(b, c) \in R$ implies $(a, c) \in R$

Step 2

2 of 5

SOLUTION

$$X = \text{ nonempty set}$$

$$A = \mathcal{P}(X)$$

$$\mathbf{S} = \{B, C \in \mathcal{P}(X) |\ B \subseteq C\ \}$$

$$\textbf{Reflexive?}$$

The relation $\mathbf{S}$ is reflective if $(B, B) \in \mathbf{S}$ for every element $a \in A$.

Since $A = \mathcal{P}(X)$, $\mathbf{S}$ is reflexive if it contains (B, B) for all $B \in \mathcal{P}(X)$.

We note that $\mathbf{S}$ contains (B, B) because a set is always a subset of itself $\subseteq B$ and thus $\mathbf{S}$ is **reflexive**.

Step 3

3 of 5

$$\textbf{Symmetric?}$$

The relation $\mathbf{S}$ on a set A is **symmetric** if $(C, B) \in \mathbf{S}$ whenever $(B, C) \in \mathbf{S}$

Let us assume that $(B, C) \in \mathbf{S}$. By definition of $\mathbf{S}$:

$$B \subseteq C$$

However, when $B \neq C$ then $C \not\subseteq B$, which implies that $\mathbf{S}$ is **not symmetric**.

Step 4

4 of 5

$$\textbf{Transitive?}$$

The relation $\mathbf{S}$ on a set A is **transitive** if $(B, C) \in \mathbf{S}$ and $(C, D) \in \mathbf{S}$ implies $(B, D) \in \mathbf{S}$

Let us assume that $(B, C) \in \mathbf{S}$ and $(C, D) \in \mathbf{S}$. By the definition of $\mathbf{S}$:

$$B \subseteq C$$

$$C \subseteq D$$

This then implies:

$$B \subseteq C \subseteq D$$

Thus $B \subseteq D$ is then true, which implies that $(B, D) \in \mathbf{S}$ and thus $\mathbf{S}$ is **transitive**.

Result

5 of 5

Reflexive

Not symmetric

Transitive

Exercise 22 Exercise 24

Exercise 24

Chapter 8, section 8.2, page 504

Discrete Mathematics with Applications
ISBN: 9781337694193

Table of contents

Solution

Verified

Step 1

1 of 5

DEFINITIONS

A relation R on a set A is **reflexive** if $(a, a) \in R$ for every element $a \in A$.

A relation R on a set A is **symmetric** if $(b, a) \in R$ whenever $(a, b) \in R$

A relation R on a set A is **transitive** if $(a, b) \in R$ and $(b, c) \in R$ implies $(a, c) \in R$

Step 2

2 of 5

SOLUTION

$$X = \text{ nonempty set}$$

$$A = \mathcal{P}(X)$$

$$\mathbf{U} = \{B, C \in \mathcal{P}(X) |\ B \neq C\ \}$$

$$\textbf{Reflexive?}$$

The relation $\mathbf{U}$ is reflective if $(B, B) \in \mathbf{U}$ for every element $a \in A$.

Since $A = \mathcal{P}(X)$, $\mathbf{U}$ is reflexive if it contains (B, B) for all $B \in \mathcal{P}(X)$.

We note that $\mathbf{U}$ does not contain (B, B) because a set is never unequal to itself $(B = B)$ and thus $\mathbf{U}$ is **not reflexive**.

Step 3

3 of 5

$$\textbf{Symmetric?}$$

The relation $\mathbf{U}$ on a set A is **symmetric** if $(C, B) \in \mathbf{U}$ whenever $(B, C) \in \mathbf{U}$

Let us assume that $(B, C) \in \mathbf{U}$. By definition of $\mathbf{U}$:

$$B \neq C$$

This then also implies:

$$C \neq B$$

Thus $(C, B) \in \mathbf{U}$, which implies that $\mathbf{U}$ is **symmetric**.

Step 4

4 of 5

$$\textbf{Transitive?}$$

The relation $\mathbf{U}$ on a set A is **transitive** if $(B, C) \in \mathbf{U}$ and $(C, D) \in \mathbf{U}$ implies $(B, D) \in \mathbf{U}$

Let us assume that $(B, C) \in \mathbf{U}$ and $(C, D) \in \mathbf{U}$. By the definition of $\mathbf{U}$:

$$B \neq C$$

$$C \neq D$$

However, it is possible to choose $D = B$ and in this case, we note that $(B, D) \notin \mathbf{U}$ and thus $\mathbf{U}$ is **not transitive**.

Result

5 of 5

Not reflexive

Symmetric

Not transitive

Exercise 23 Exercise 25

Exercise 25

Chapter 8, section 8.2, page 504

Discrete Mathematics with Applications
ISBN: 9781337694193

Table of contents

Solution

Verified

Step 1

1 of 2

R is reflexive: Suppose s is any string in A. Then sRs because s has the same first two characters as s.

R is symmetric: Suppose s and t are any strings in A such that sRt. By definition of R, s has the same first two characters as t. Then t has the same first two characters as s, and so tRs.

R is transitive: Suppose s, t, and u, are any strings in A such that sRt and tRu. By definition of R, s has the same first two characters as t and t has the same first two characters as u. So s has the same two characters as u, and so sRu.

Result

2 of 2

reflexive, symmetric, transitive

Exercise 24 Exercise 26

Exercise 26

Chapter 8, section 8.2, page 504

Discrete Mathematics with Applications
ISBN: 9781337694193

Table of contents

Solution

Verified

Step 1

1 of 3

Solution:

The observed relation R is defined on the set A of all strings of length 4 formed using 0's 1's and 2's so that the sum of the characters in those string do not exceed 2. In the previous chapter there was an identical exercise and the text stated that this relation is an equivalence relation on A, but now we will prove that.

Using the result from that exercise, we have that the set A is as follows:

$$A = \{0000, 1000, 0100, 0010, 0001, 1100, 1010, 1001, 0110, 0101, 0011, 2000, 0200, 0020, 0002\}$$

$\boxed{1)}$ Reflexivity of a relation R means that for every string $s \in A$, over which the relation is defined, it holds that sRs. In our case, it would mean that every string $s \in A$ has the same sum of characters as itself . This is true, because the relation of equality is reflexive and we can apply that here.

$\boxed{2)}$ Relation R (defined on A) is symmetric if for every two elements $a, b \in A$ it holds that

$$aRb \implies bRa$$

In this exercise, symmetric property would mean that for every two strings $s, t \in A$ it holds that if s has the same sum of characters as t, then t has the same sum of characters as s. Again, using this property of a relation of equality, we can conclude that R is also symmetric.

Really, assume that the sum of characters in s equals $k \in \{0, 1, 2\}$. According to our hypothesis in the observed implication, we have that the sum of characters in t equals also k. Therefore, the conclusion part of the implication is also true.

Step 2

2 of 3

$\boxed{3)}$ The transitivity property of a relation R defined on A means that for any three elements $a, b, c \in A$ the following implication is true:

$$aRb \wedge bRc \implies aRc$$

Therefore, for any three strings $s, t, p \in A$ is sRt and tRp it must hold that sRp. Let's use the definition of the relation R to see if this is true.

-The fact that sRt means that s and t have equal sums of characters;

-the fact that tRp means that t and p have equal sums of characters.

Denote the sums of characters in s, t and p as S, T and P in that order. We have that $S = T$ and $T = P$. Once again, by the transitivity of the relation of equality, we have that $S = P$, hence sRp and the relation R is transitive.

Result

3 of 3

The relation R is relation of equivalence, which means that it is reflexive, symmetric and transitive. See above for the detailed explanation.

Exercise 25 Exercise 27

Exercise 27

Chapter 8, section 8.2, page 504

Discrete Mathematics with Applications
ISBN: 9781337694193

Table of contents

Solution

Verified

Step 1

1 of 5

DEFINITIONS

A relation R on a set A is **reflexive** if $(a, a) \in R$ for every element $a \in A$.

A relation R on a set A is **symmetric** if $(b, a) \in R$ whenever $(a, b) \in R$

A relation R on a set A is **transitive** if $(a, b) \in R$ and $(b, c) \in R$ implies $(a, c) \in R$

A conditional statement $p \to q$ is true, if p is false, or if both (sub)propositions are true.

Step 2

2 of 5

SOLUTION

$$A = \text{Set of all English statements}$$

$$\mathbf{I} = \{p, q \in A |\ p \to q \text{ is true } \}$$

$$\textbf{Reflexive?}$$

The relation $\mathbf{I}$ is reflective if $(p, p) \in \mathbf{I}$ for every element $p \in A$.

Let p be an English statement.

If p is true, then $p \to p$ is true, since both (sub)propositions are true.

If p is false, then $p \to p$ is true, since the if-statement is false.

Thus $p \to p$ is always true, which implies that $(p, p) \in \mathbf{I}$ and thus $\mathbf{I}$ is **reflexive**.

Step 3

3 of 5

$$\textbf{Symmetric?}$$

The relation $\mathbf{I}$ on a set A is **symmetric** if $(p, q) \in \mathbf{I}$ whenever $(q, p) \in \mathbf{I}$

Let us assume that $(p, q) \in \mathbf{I}$. By definition of $\mathbf{I}$:

$$p \to q \text{ is true}$$

However, when p is false and q is true, then $q \to p$ will be false and thus $q \to p$ is not necessarily true, which implies that $\mathbf{I}$ is **not symmetric**.

Step 4

4 of 5

$$\textbf{Transitive?}$$

The relation $\mathbf{I}$ on a set A is **transitive** if $(p, q) \in \mathbf{I}$ and $(q, r) \in \mathbf{I}$ implies $(p, r) \in \mathbf{I}$

Let us assume that $(p, q) \in \mathbf{I}$ and $(q, r) \in \mathbf{I}$. By the definition of $\mathbf{I}$:

$$p \to q \text{ is true}$$

$$q \to r \text{ is true}$$

If $p \to q$ and $q \to r$ is true, then $p \to r$ is also true.

$$p \to r \text{ is true}$$

We then note that $(p, r) \in \mathbf{I}$ and thus $\mathbf{I}$ is **transitive**.

Result

5 of 5

Reflexive

Not symmetric

Transitive

Exercise 26 Exercise 28

Exercise 28

Chapter 8, section 8.2, page 504

Discrete Mathematics with Applications
ISBN: 9781337694193

Table of contents

Solution

Verified

Step 1

1 of 5

DEFINITIONS

A relation R on a set A is **reflexive** if $(a, a) \in R$ for every element $a \in A$.

A relation R on a set A is **symmetric** if $(b, a) \in R$ whenever $(a, b) \in R$

A relation R on a set A is **transitive** if $(a, b) \in R$ and $(b, c) \in R$ implies $(a, c) \in R$

Step 2

2 of 5

SOLUTION

$$A = \mathbf{R} \times \mathbf{R}$$

$$\mathbf{F} = \{((x_1, y_1), (x_2, y_2)) \in A |\ x_1 = x_2\ \}$$

Reflexive?

The relation $\mathbf{F}$ is reflective if $((x_1, y_1), (x_1, y_1)) \in \mathbf{F}$ for every element $(x_1, y_1) \in A$.

Since $x_1 = x_1$, we know that $((x_1, y_1), (x_1, y_1)) \in \mathbf{F}$ for all elements $(x_1, y_1) \in A$.

Thus $\mathbf{F}$ is **reflexive**.

Step 3

3 of 5

Symmetric?

The relation $\mathbf{F}$ on a set A is **symmetric** if $((x_1, y_1), (x_2, y_2)) \in \mathbf{F}$ whenever $((x_2, y_2), (x_1, y_1)) \in \mathbf{F}$

Let us assume that $((x_1, y_1), (x_2, y_2)) \in \mathbf{F}$. By definition of $\mathbf{F}$:

$$x_1 = x_2$$

However, this also implies that:

$$x_2 = x_1$$

This then means that $((x_2, y_2), (x_1, y_1)) \in \mathbf{F}$ and thus $\mathbf{F}$ is **symmetric**.

Step 4

4 of 5

Transitive?

The relation $\mathbf{F}$ on a set A is **transitive** if $((x_1, y_1), (x_2, y_2)) \in \mathbf{F}$ and $((x_2, y_2), (x_3, y_3)) \in \mathbf{F}$ implies $((x_1, y_1), (x_3, y_3)) \in \mathbf{F}$

Let us assume that $((x_1, y_1), (x_2, y_2)) \in \mathbf{F}$ and $((x_2, y_2), (x_3, y_3)) \in \mathbf{F}$. By the definition of $\mathbf{F}$:

$$x_1 = x_2$$

$$x_2 = x_3$$

However, this also implies that:

$$x_1 = x_3$$

We then note that $((x_1, y_1), (x_3, y_3)) \in \mathbf{F}$ and thus $\mathbf{F}$ is **transitive**.

Result

5 of 5

Reflexive

Symmetric

Transitive

Exercise 27 Exercise 29

Exercise 29

Chapter 8, section 8.2, page 504

Discrete Mathematics with Applications
ISBN: 9781337694193

Table of contents

Solution

Verified

Step 1

1 of 5

DEFINITIONS

A relation R on a set A is **reflexive** if $(a, a) \in R$ for every element $a \in A$.

A relation R on a set A is **symmetric** if $(b, a) \in R$ whenever $(a, b) \in R$

A relation R on a set A is **transitive** if $(a, b) \in R$ and $(b, c) \in R$ implies $(a, c) \in R$

Step 2

2 of 5

SOLUTION

$$A = \mathbf{R} \times \mathbf{R}$$

$$\mathbf{F} = \{((x_1, y_1), (x_2, y_2)) \in A |\ y_1 = y_2\ \}$$

Reflexive?

The relation $\mathbf{F}$ is reflective if $((x_1, y_1), (x_1, y_1)) \in \mathbf{F}$ for every element $(x_1, y_1) \in A$.

Since $y_1 = y_1$, we know that $((x_1, y_1), (x_1, y_1)) \in \mathbf{F}$ for all elements $(x_1, y_1) \in A$.

Thus $\mathbf{F}$ is **reflexive**.

Step 3

3 of 5

Symmetric?

The relation $\mathbf{F}$ on a set A is **symmetric** if $((x_1, y_1), (x_2, y_2)) \in \mathbf{F}$ whenever $((x_2, y_2), (x_1, y_1)) \in \mathbf{F}$

Let us assume that $((x_1, y_1), (x_2, y_2)) \in \mathbf{F}$. By definition of $\mathbf{F}$:

$$y_1 = y_2$$

However, this also implies that:

$$y_2 = y_1$$

This then means that $((x_2, y_2), (x_1, y_1)) \in \mathbf{F}$ and thus $\mathbf{F}$ is **symmetric**.

Step 4

4 of 5

Transitive?

The relation $\mathbf{F}$ on a set A is **transitive** if $((x_1, y_1), (x_2, y_2)) \in \mathbf{F}$ and $((x_2, y_2), (x_3, y_3)) \in \mathbf{F}$ implies $((x_1, y_1), (x_3, y_3)) \in \mathbf{F}$

Let us assume that $((x_1, y_1), (x_2, y_2)) \in \mathbf{F}$ and $((x_2, y_2), (x_3, y_3)) \in \mathbf{F}$. By the definition of $\mathbf{F}$:

$$y_1 = y_2$$

$$y_2 = y_3$$

However, this also implies that:

$$y_1 = y_3$$

We then note that $((x_1, y_1), (x_3, y_3)) \in \mathbf{F}$ and thus $\mathbf{F}$ is **transitive**.

Result

5 of 5

Reflexive

Symmetric

Transitive

Exercise 28 Exercise 30

Exercise 30

Chapter 8, section 8.2, page 504

Discrete Mathematics with Applications
ISBN: 9781337694193

Table of contents

Solutions

Verified

Solution A Solution B

Step 1

1 of 2

A: Set of all points in the Cartesian plane except the origin.

$P_1, P_2 \in A$,

$P_1 R P_2 \Leftrightarrow P_1$ and P_2 lie on the same half line emanating from the origin.

Reflexive: Let $p \in A$

Draw the line passing through the origin & p. This means, p and p lie on the same half line emanating from the origin.

$\boxed{\therefore p R p}$

Symmetric: Let $p, q \in A$ s.t.

$p R q$

This means, p and q lie on the same half line emanating from the origin, which means q and p lie on the same half line emanating from the origin. Therefore,

$\boxed{q R p}$

Transitive: Let $p, q, r \in A$ such that,

$p R q$ and $q R r$.

Therefore, p and q lie on the same line say L_1 emanating from the origin; q and r lie on the same half line emanating from the origin, call it L_2. But L_1 and L_2 both pass through origin and point q (q is not origin), therefore $L_1 = L_2$. So, p and r lie on L_1 and hence $\boxed{p R r}$.

Note that in case of transitive, since $q \neq (0,0)$, the lines L_1 and L_2 are line passing through two distinct points $(0,0)$ and q. We know that a line is uniquely determined by two distinct points it passes through. So, L_1 and L_2 are same lines.

Result

2 of 2

Explore the result

Exercise 29 Exercise 31

Exercise 30

Chapter 8, section 8.2, page 504

Discrete Mathematics with Applications
ISBN: 9781337694193

Table of contents

Solutions

Verified

Solution A Solution B

Step 1

1 of 5

DEFINITIONS

A relation R on a set A is **reflexive** if $(a, a) \in R$ for every element $a \in A$.

A relation R on a set A is **symmetric** if $(b, a) \in R$ whenever $(a, b) \in R$

A relation R on a set A is **transitive** if $(a, b) \in R$ and $(b, c) \in R$ implies $(a, c) \in R$

Step 2

2 of 5

SOLUTION

$$A = \mathbf{R} \times \mathbf{R} - \{(0, 0)\}$$

$$R = \{(x_1, y_1), (x_2, y_2) \in A |\ (x_1, y_1) \text{ and } (x_2, y_2) \text{ lie on the same half line starting from the origin } \}$$

Reflexive?

The relation R is reflective if $((x_1, y_1), (x_1, y_1)) \in R$ for every element $(x_1, y_1) \in A$.

Since a point always lies on the same half line starting from the origin as itself, we know that $((x_1, y_1), (x_1, y_1)) \in R$ for all elements $(x_1, y_1) \in A$.

Thus R is **reflexive**.

Step 3

3 of 5

Symmetric?

The relation R on a set A is **symmetric** if $((x_1, y_1), (x_2, y_2)) \in R$ whenever $((x_2, y_2), (x_1, y_1)) \in R$

Let us assume that $((x_1, y_1), (x_2, y_2)) \in R$.

By definition of R: (x_1, y_1) and (x_2, y_2) lie on the same half-line emanating from the origin, but then (x_2, y_2) and (x_1, y_1) also lie on the same half-line emanating from the origin.

This then means that $((x_2, y_2), (x_1, y_1)) \in R$ and thus R is **symmetric**.

Step 4

4 of 5

Transitive?

The relation R on a set A is **transitive** if $((x_1, y_1), (x_2, y_2)) \in R$ and $((x_2, y_2), (x_3, y_3)) \in R$ implies $((x_1, y_1), (x_3, y_3)) \in R$

Let us assume that $((x_1, y_1), (x_2, y_2)) \in R$ and $((x_2, y_2), (x_3, y_3)) \in R$.

By definition of R: (x_1, y_1) and (x_2, y_2) lie on the same half-line emanating from the origin, while (x_2, y_2) and (x_3, y_3) also lie on the same half-line emanating from the origin. But then (x_1, y_1) and (x_3, y_3) also lie on the same half-line emanating from the origin.

We then note that $((x_1, y_1), (x_3, y_3)) \in R$ and thus R is **transitive**.

Result

5 of 5

Reflexive

Symmetric

Transitive

Exercise 29 Exercise 31

Exercise 31

Chapter 8, section 8.2, page 504

Discrete Mathematics with Applications
ISBN: 9781337694193

Table of contents

Solution

Verified

Step 1

1 of 5

DEFINITIONS

A relation R on a set A is **reflexive** if $(a, a) \in R$ for every element $a \in A$.

A relation R on a set A is **symmetric** if $(b, a) \in R$ whenever $(a, b) \in R$

A relation R on a set A is **transitive** if $(a, b) \in R$ and $(b, c) \in R$ implies $(a, c) \in R$

Step 2

2 of 5

SOLUTION

$$A = \text{Set of people living in the world today}$$

$$R = \{(p, q) \in A \times A |\ p \text{ lives within 100 miles from } q\ \}$$

Reflexive?

The relation R is reflective if $(p, p) \in R$ for every element $p \in A$.

Since a person always lives within 100 miles from itself, we know that $(p, q) \in R$ for all elements $p \in A$.

Thus R is **reflexive**.

Step 3

3 of 5

Symmetric?

The relation R on a set A is **symmetric** if $(q, p) \in R$ whenever $(p, q) \in R$

Let us assume that $(p, q) \in R$.

By definition of R: p and q live within 100 miles from each other, but then q and p also live within 100 miles from each other (as the distance remains the same).

This then means that $(q, p) \in R$ and thus R is **symmetric**.

Step 4

4 of 5

Transitive?

The relation R on a set A is **transitive** if $(p, q) \in R$ and $(q, r) \in R$ implies $(p, r) \in R$

Let us assume that $(p, q) \in R$ and $(q, r) \in R$.

By definition of R: p and q live within 100 miles of each other, while q and r live within 100 miles of each other. However, if p and r live on opposite directions of q, then p and r will live more than 100 miles from each other and thus $(p, r) \notin R$ in this case.

Thus R is **not transitive**.

Result

5 of 5

Reflexive

Symmetric

Not transitive

Exercise 30 Exercise 32

Exercise 32

Chapter 8, section 8.2, page 504

Discrete Mathematics with Applications
ISBN: 9781337694193

Table of contents

Solution

Verified

Step 1

1 of 2

The relation R is defined as

$$R = \{l_1, l_2 \in A \mid l_1 \text{ is parallel to } l_2\}$$

The relation R is reflexive if, and only if, $l_1 \; R \; l_1$ for every $l_1 \in A$.

A is reflexive : By using the assumption, a line is parallel to itself. Hence, $l_1 \; R \; l_1$ by the definition of R.

The relation R is symmetric if for every $l_1, l_2 \in A$, if $l_1 \; R \; l_2$ then $l_2 \; R \; l_1$.

A is symmetric : If $l_1 \; R \; l_2$, then

$$l_1 \text{ is parallel to } l_2$$

Since, lines are parallel to each other, then

$$l_2 \text{ is parallel to } l_1$$

which implies $l_2 \; R \; l_1$. Hence, if $l_1 \; R \; l_2$, then $l_2 \; R \; l_1$ by the definition of R.

The relation A is transitive if for every $l_1, l_2, l_3 \in A$, if $l_1 \; R \; l_2$ and $l_2 \; R \; l_3$, then $l_1 \; R \; l_3$.

A is transitive : If $l_1 \; R \; l_2$, then

$$l_1 \text{ is parallel to } l_2$$

If $l_2 \; R \; l_3$, then

$$l_2 \text{ is parallel to } l_3$$

Since, lines parallel to the same line are parallel to each other, then

$$l_1 \text{ is parallel to } l_3$$

which implies $l_1 \; R \; l_3$. Hence, if $l_1 \; R \; l_2$ and $l_2 \; R \; l_3$, then $l_1 \; R \; l_3$ by the definition of R.

Result

2 of 2

Reflexive, Symmetric, Transitive.

Exercise 31 Exercise 33

Exercise 33

Chapter 8, section 8.2, page 504

Discrete Mathematics with Applications
ISBN: 9781337694193

Table of contents

Solution

Verified

Step 1

1 of 5

DEFINITIONS

A relation R on a set A is **reflexive** if $(a, a) \in R$ for every element $a \in A$.

A relation R on a set A is **symmetric** if $(b, a) \in R$ whenever $(a, b) \in R$

A relation R on a set A is **transitive** if $(a, b) \in R$ and $(b, c) \in R$ implies $(a, c) \in R$

Step 2

2 of 5

SOLUTION

$$A = \text{Set of all lines in the plane}$$

$$R = \{(p, q) \in A \times A |\ p \text{ is perpendicular to } q\ \}$$

Reflexive?

The relation R is reflective if $(p, p) \in R$ for every element $p \in A$.

Since a line is never perpendicular to itself, $(p, p) \notin R$.

Thus R is **not reflexive**.

jmlirjtet mjretm lijretm lrejtj erjtl jrljtlr jlktjrl jtrlj ljr litelrj tlretm ermthmre hmtlrel thmrleht hlirht l

Step 3

3 of 5

Symmetric?

The relation R on a set A is **symmetric** if $(q, p) \in R$ whenever $(p, q) \in R$

Let us assume that $(p, q) \in R$.

By definition of R: p is perpendicular to q, but then q is also perpendicular to p.

This then means that $(q, p) \in R$ and thus R is **symmetric**.

Step 4

4 of 5

Transitive?

The relation R on a set A is **transitive** if $(p, q) \in R$ and $(q, r) \in R$ implies $(p, r) \in R$

Let us assume that $(p, q) \in R$ and $(q, r) \in R$.

By definition of R: p is perpendicular to q, while q is perpendicular to r. However, if p and r are then parallel (or the two lines fall together) and thus $(p, r) \notin R$.

Thus R is **not transitive**.

Result

5 of 5

Not reflexive

Symmetric

Not transitive

Exercise 32 Exercise 34

Exercise 34

Chapter 8, section 8.2, page 504

Discrete Mathematics with Applications
ISBN: 9781337694193

Table of contents

Solution

Verified

Step 1

1 of 3

DEFINITIONS

A relation R on a set A is **reflexive** if $(a, a) \in R$ for every element $a \in A$.

A relation R on a set A is **symmetric** if $(b, a) \in R$ whenever $(a, b) \in R$

A relation R on a set A is **transitive** if $(a, b) \in R$ and $(b, c) \in R$ implies $(a, c) \in R$

The **inverse relation** R^{-1} is the set $\{(b, a) | (a, b) \in R\}$

Step 2

2 of 3

SOLUTION

Given: R is a relation on the set A.

To proof: If R is reflexive, then R^{-1} is reflexive

PROOF

Let us assume that R is reflexive and let $a \in A$.

By the definition of reflexive:

$$(a, a) \in R$$

By the definition of the inverse relation:

$$(a, a) \in R^{-1}$$

Thus $(a, a) \in R^{-1}$ for any $a \in A$ and thus R^{-1} is reflexive.

$$\square$$

Result

3 of 3

We proof that "if R is reflexive, then R^{-1} is reflexive" by assuming that R is reflexive, while using the definition of reflexive and using the definition of the inverse relation.

Exercise 33 Exercise 35

Exercise 35

Chapter 8, section 8.2, page 504

Discrete Mathematics with Applications
ISBN: 9781337694193

Table of contents

Solution

Verified

Step 1

1 of 3

DEFINITIONS

A relation R on a set A is **reflexive** if $(a, a) \in R$ for every element $a \in A$.

A relation R on a set A is **symmetric** if $(b, a) \in R$ whenever $(a, b) \in R$

A relation R on a set A is **transitive** if $(a, b) \in R$ and $(b, c) \in R$ implies $(a, c) \in R$

The **inverse relation** R^{-1} is the set $\{(b, a) | (a, b) \in R\}$

Step 2

2 of 3

SOLUTION

Given: R is a relation on the set A.

To proof: If R is symmetric, then R^{-1} is symmetric

PROOF

Let us assume that R is symmetric and let $(a, b) \in R^{-1}$.

By the definition of the inverse relation:

$$(b, a) \in R$$

By the definition of symmetric:

$$(a, b) \in R$$

By the definition of the inverse relation:

$$(b, a) \in R^{-1}$$

Thus $(a, b) \in R^{-1}$ implies $(b, a) \in R^{-1}$, which means that R^{-1} is symmetric.

$$\square$$

Result

3 of 3

We proof that "if R is symmetric, then R^{-1} is symmetric" by assuming that R is symmetric, while using the definition of symmetric and using the definition of the inverse relation.

Exercise 34 Exercise 36

Exercise 36

Chapter 8, section 8.2, page 504

Discrete Mathematics with Applications
ISBN: 9781337694193

Table of contents

Solution

Verified

Step 1

1 of 3

DEFINITIONS

A relation R on a set A is **reflexive** if $(a, a) \in R$ for every element $a \in A$.

A relation R on a set A is **symmetric** if $(b, a) \in R$ whenever $(a, b) \in R$

A relation R on a set A is **transitive** if $(a, b) \in R$ and $(b, c) \in R$ implies $(a, c) \in R$

The **inverse relation** R^{-1} is the set $\{(b, a) | (a, b) \in R\}$

Step 2

2 of 3

SOLUTION

Given: R is a relation on the set A.

To proof: If R is transitive, then R^{-1} is transitive

PROOF

Let us assume that R is transitive and let $(a, b) \in R^{-1}$ and let $(b, c) \in R^{-1}$.

By the definition of the inverse relation:

$$(b, a) \in R$$

$$(c, b) \in R$$

By the definition of transitive (since R is transitive):

$$(c, a) \in R$$

By the definition of the inverse relation:

$$(a, c) \in R^{-1}$$

Thus $(a, b) \in R^{-1}$ and $(b, c) \in R^{-1}$ implies $(a, c) \in R^{-1}$, which means that R^{-1} is transitive.

$$\square$$

Result

3 of 3

We proof that "if R is transitive, then R^{-1} is transitive" by assuming that R is transitive, while using the definition of transitive and using the definition of the inverse relation.

Exercise 35 Exercise 37

Exercise 37

Chapter 8, section 8.2, page 504

Discrete Mathematics with Applications
ISBN: 9781337694193

Table of contents

Solution

Verified

Step 1

1 of 3

DEFINITIONS

A relation R on a set A is **reflexive** if $(a, a) \in R$ for every element $a \in A$.

A relation R on a set A is **symmetric** if $(b, a) \in R$ whenever $(a, b) \in R$

A relation R on a set A is **transitive** if $(a, b) \in R$ and $(b, c) \in R$ implies $(a, c) \in R$

The **inverse relation** R^{-1} is the set $\{(b, a) | (a, b) \in R\}$

Intersection $A \cap B$: All elements that are both in A AND in B.

Step 2

2 of 3

SOLUTION

The given statement is **true**, which we will justify with a proof.

Given: R and S are relations on the set A.

To proof: If R and S are reflexive, then $R \cap S$ is reflexive

PROOF

Let us assume that R and S are reflexive and let $a \in A$.

By the definition of reflexive and using that R is reflexive:

$$(a, a) \in R$$

By the definition of reflexive and using that S is reflexive:

$$(a, a) \in S$$

By the definition of the intersection, using that $(a, a) \in R$ and $(a, a) \in S$:

$$(a, a) \in R \cap S$$

Thus $(a, a) \in R \cap S$ for any $a \in A$ and thus $R \cap S$ is reflexive.

$$\square$$

Result

3 of 3

True

Exercise 36 Exercise 38

Exercise 38

Chapter 8, section 8.2, page 504

Discrete Mathematics with Applications
ISBN: 9781337694193

Table of contents

Solution

Verified

Step 1

1 of 3

DEFINITIONS

A relation R on a set A is **reflexive** if $(a, a) \in R$ for every element $a \in A$.

A relation R on a set A is **symmetric** if $(b, a) \in R$ whenever $(a, b) \in R$

A relation R on a set A is **transitive** if $(a, b) \in R$ and $(b, c) \in R$ implies $(a, c) \in R$

The **inverse relation** R^{-1} is the set $\{(b, a) | (a, b) \in R\}$

Intersection $A \cap B$: All elements that are both in A AND in B.

Step 2

2 of 3

SOLUTION

The given statement is **true**, which we will justify with a proof.

Given: R and S are relations on the set A.

To proof: If R and S are symmetric, then $R \cap S$ is symmetric

PROOF

Let us assume that R and S are symmetric and let $(a, b) \in R \cap S$.

By the definition of the intersection and using $(a, b) \in R \cap S$:

$$(a, b) \in R$$

$$(a, b) \in S$$

By the definition of symmetric and using that R is symmetric with $(a, b) \in R$:

$$(b, a) \in R$$

By the definition of symmetric and using that S is symmetric with $(a, b) \in S$:

$$(b, a) \in S$$

By the definition of the intersection, using that $(b, a) \in R$ and $(b, a) \in S$:

$$(b, a) \in R \cap S$$

Thus $(a, b) \in R \cap S$ implies $(b, a) \in R \cap S$ and thus $R \cap S$ is symmetric.

$$\square$$

Result

3 of 3

True

Exercise 37 Exercise 39

Exercise 39

Chapter 8, section 8.2, page 504

Discrete Mathematics with Applications
ISBN: 9781337694193
Table of contents

Solution

Verified

Step 1

1 of 3

DEFINITIONS

A relation R on a set A is **reflexive** if $(a, a) \in R$ for every element $a \in A$.

A relation R on a set A is **symmetric** if $(b, a) \in R$ whenever $(a, b) \in R$

A relation R on a set A is **transitive** if $(a, b) \in R$ and $(b, c) \in R$ implies $(a, c) \in R$

The **inverse relation** R^{-1} is the set $\{(b, a) | (a, b) \in R\}$

Intersection $A \cap B$: All elements that are both in A AND in B.

Step 2

2 of 3

SOLUTION

The given statement is **true**, which we will justify with a proof.

Given: R and S are relations on the set A.

To proof: If R and S are transitive, then $R \cap S$ is transitive

PROOF

Let us assume that R and S are transitive and let $(a, b) \in R \cap S$ and let $(b, c) \in R \cap S$.

By the definition of the intersection and using $(a, b) \in R \cap S$ and $(b, c) \in R \cap S$:

$$(a, b) \in R$$

$$(a, b) \in S$$

$$(b, c) \in R$$

$$(b, c) \in S$$

By the definition of transitive and using that R is transitive with $(a, b) \in R$ and $(b, c) \in R$:

$$(a, c) \in R$$

By the definition of transitive and using that S is transitive with $(a, b) \in S$ and $(b, c) \in S$:

$$(a, c) \in S$$

By the definition of the intersection, using that $(a, c) \in R$ and $(a, c) \in S$:

$$(a, c) \in R \cap S$$

Thus $(a, b) \in R \cap S$ and $(b, c) \in R \cap S$ implies $(a, c) \in R \cap S$ and thus $R \cap S$ is transitive.

$\square$

Result

3 of 3

True

Exercise 38 Exercise 40

Exercise 40

Chapter 8, section 8.2, page 504

Discrete Mathematics with Applications
ISBN: 9781337694193

Table of contents

Solution

Verified

Step 1

1 of 3

DEFINITIONS

A relation R on a set A is **reflexive** if $(a, a) \in R$ for every element $a \in A$.

A relation R on a set A is **symmetric** if $(b, a) \in R$ whenever $(a, b) \in R$

A relation R on a set A is **transitive** if $(a, b) \in R$ and $(b, c) \in R$ implies $(a, c) \in R$

The **inverse relation** R^{-1} is the set $\{(b, a) | (a, b) \in R\}$

Union $A \cup B$: All elements that are either in A OR in B (or both)

Step 2

2 of 3

SOLUTION

The given statement is **true**, which we will justify with a proof.

Given: R and S are relations on the set A.

To proof: If R and S are reflexive, then $R \cup S$ is reflexive

PROOF

Let us assume that R and S are reflexive and let $a \in A$.

By the definition of reflexive and using that R is reflexive:

$$(a, a) \in R$$

By the definition of reflexive and using that S is reflexive:

$$(a, a) \in S$$

By the definition of the union, using that $(a, a) \in R$ and $(a, a) \in S$:

$$(a, a) \in R \cup S$$

Thus $(a, a) \in R \cup S$ for any $a \in A$ and thus $R \cup S$ is reflexive.

$$\square$$

Result

3 of 3

True

Exercise 39 Exercise 41

Exercise 41

Chapter 8, section 8.2, page 504

Discrete Mathematics with Applications
ISBN: 9781337694193

Table of contents

Solution

Verified

Step 1

1 of 3

DEFINITIONS

A relation R on a set A is **reflexive** if $(a, a) \in R$ for every element $a \in A$.

A relation R on a set A is **symmetric** if $(b, a) \in R$ whenever $(a, b) \in R$

A relation R on a set A is **transitive** if $(a, b) \in R$ and $(b, c) \in R$ implies $(a, c) \in R$

The **inverse relation** R^{-1} is the set $\{(b, a) | (a, b) \in R\}$

Union $A \cup B$: All elements that are either in A OR in B (or both)

Step 2

2 of 3

SOLUTION

The given statement is **true**, which we will justify with a proof.

Given: R and S are relations on the set A.

To proof: If R and S are symmetric, then $R \cup S$ is symmetric

PROOF

Let us assume that R and S are symmetric and let $(a, b) \in R \cup S$.

By the definition of the union and using $(a, b) \in R \cup S$:

$$(a, b) \in R \text{ or } (a, b) \in S$$

By the definition of symmetric:

$$(b, a) \in R \text{ or } (b, a) \in S$$

By the definition of the union:

$$(b, a) \in R \cup S$$

Thus $(a, b) \in R \cup S$ implies $(b, a) \in R \cup S$ and thus $R \cup S$ is symmetric.

$$\square$$

Result

3 of 3

True

Exercise 40 Exercise 42

Exercise 42

Chapter 8, section 8.2, page 504

Discrete Mathematics with Applications
ISBN: 9781337694193

Table of contents

Solution

Verified

Step 1

1 of 3

DEFINITIONS

A relation R on a set A is **reflexive** if $(a, a) \in R$ for every element $a \in A$.

A relation R on a set A is **symmetric** if $(b, a) \in R$ whenever $(a, b) \in R$

A relation R on a set A is **transitive** if $(a, b) \in R$ and $(b, c) \in R$ implies $(a, c) \in R$

Union $A \cup B$: All elements that are either in A OR in B (or both)

Step 2

2 of 3

SOLUTION

Given statement: Let R and S are relations on the set A. If R and S are transitive, then $R \cup S$ is transitive

The given statement is **false**, which we will justify with a counterexample.

$$\textbf{COIUNTEREXAMPLE}$$

Let $R = \{(0, 1)\}$ and $S = \{(1, 2)\}$ with $A = \{0, 1, 2\}$.

By the definition of the union:

$$R \cup S = \{(0, 1), (1, 2)\}$$

R is transitive, because the if-statement "$(a, b) \in R$ and $(b, c) \in R$" can never be true (as R contains only one element) and an if-then statement is always true when the if-statement is false.

S is transitive, because the if-statement "$(a, b) \in S$ and $(b, c) \in S$" can never be true (as S contains only one element) and an if-then statement is always true when the if-statement is false.

However, $R \cup S$ is not transitive, because $(0, 1) \in R \cup S$ and $(1, 2) \in R \cup S$ while $(0, 2) \notin R \cup S$.

Result

3 of 3

False

Exercise 41 Exercise 43

Exercise 43

Chapter 8, section 8.2, page 504

Discrete Mathematics with Applications
ISBN: 9781337694193
Table of contents

Solution

Verified

Step 1

1 of 5

DEFINITIONS

A relation R on a set A is **irreflexive** if $(a, a) \notin R$ for every element $a \in A$.

A relation R on a set A is **asymmetric** if $(b, a) \notin R$ whenever $(a, b) \in R$

A relation R one a set A is **intransitive** if $(a, c) \notin R$ whenever $(a, b) \in R$ and $(b, c) \in R$.

Step 2

2 of 5

SOLUTION

$$A = \{0, 1, 2, 3\}$$

$$R_1 = \{(0,0), (0,1), (0,3), (1,1), (1,0), (2,3), (3,3)\}$$

Irreflexive?

The relation R_1 is irreflective if $(a, a) \notin R_1$ for every element $a \in A$.

Since $A = \{0, 1, 2, 3\}$, R_1 is irreflexive if it does not contain $(0,0), (1,1), (2,2), (3,3)$.

We note that R_1 contains $(0,0)$ and thus R_1 is **not irreflexive**.

Step 3

3 of 5

Asymmetric?

The relation R_1 on a set A is asymmetric if $(b, a) \notin R_1$ whenever $(a, b) \in R_1$

We note that $(0,1) \in R_1$ and $(1,0) \in R_1$ and thus R_1 is **not asymmetric**.

Step 4

4 of 5

Intransitive?

The relation R_1 on a set A is intransitive if $(a, c) \notin R_1$ whenever $(a, b) \in R_1$ and $(b, c) \in R_1$

We note that $(0,1) \in R_1$ and $(1,0) \in R_1$, while $(1,1) \in R_1$ and thus R_1 is **not intransitive**.

Result

5 of 5

Not irreflexive

Not asymmetric

Not intransitive

Exercise 42 Exercise 44

Exercise 44

Chapter 8, section 8.2, page 504

Discrete Mathematics with Applications
ISBN: 9781337694193

Table of contents

Solution

Verified

Step 1

1 of 5

DEFINITIONS

A relation R on a set A is **irreflexive** if $(a, a) \notin R$ for every element $a \in A$.

A relation R on a set A is **asymmetric** if $(b, a) \notin R$ whenever $(a, b) \in R$

A relation R one a set A is **intransitive** if $(a, c) \notin R$ whenever $(a, b) \in R$ and $(b, c) \in R$.

Step 2

2 of 5

SOLUTION

$$A = \{0, 1, 2, 3\}$$

$$R_2 = \{(0,0), (0,1), (1,1), (1,2), (2,2), (2,3)\}$$

Irreflexive?

The relation R_2 is irreflective if $(a, a) \notin R_2$ for every element $a \in A$.

Since $A = \{0, 1, 2, 3\}$, R_2 is irreflexive if it does not contain $(0, 0), (1, 1), (2, 2), (3, 3)$.

We note that R_2 contains $(0, 0)$ and thus R_2 is **not irreflexive**.

Step 3

3 of 5

Asymmetric?

The relation R_2 on a set A is **asymmetric** if $(b, a) \notin R_2$ whenever $(a, b) \in R_2$

We note that $(0, 0) \in R_2$ while $(0, 0) \in R_2$ and thus R_2 is **not asymmetric**.

Step 4

4 of 5

Intransitive?

The relation R_2 on a set A is **intransitive** if $(a, c) \notin R_2$ whenever $(a, b) \in R_2$ and $(b, c) \in R_2$

We note that $(0, 1) \in R_2$ and $(1, 1) \in R_2$, while $(0, 1) \in R_2$ and thus R_2 is **not intransitive**.

Result

5 of 5

Not irreflexive

Not asymmetric

Not intransitive

Exercise 43 Exercise 45

Exercise 45

Chapter 8, section 8.2, page 504

Discrete Mathematics with Applications
ISBN: 9781337694193

Table of contents

Solution

Verified

Step 1

1 of 5

DEFINITIONS

A relation R on a set A is **irreflexive** if $(a, a) \notin R$ for every element $a \in A$.

A relation R on a set A is **asymmetric** if $(b, a) \notin R$ whenever $(a, b) \in R$

A relation R one a set A is **intransitive** if $(a, c) \notin R$ whenever $(a, b) \in R$ and $(b, c) \in R$.

Step 2

2 of 5

SOLUTION

$$A = \{0, 1, 2, 3\}$$

$$R_3 = \{(2, 3), (3, 2)\}$$

Irreflexive?

The relation R_3 is irreflective if $(a, a) \notin R_3$ for every element $a \in A$.

Since $A = \{0, 1, 2, 3\}$, R_3 is irreflexive if it does not contain $(0, 0), (1, 1), (2, 2), (3, 3)$.

We note that R_3 does not contain $(0, 0), (1, 1), (2, 2)$ nor $(3, 3)$ and thus R_3 is **irreflexive**.

Step 3

3 of 5

Asymmetric?

The relation R_3 on a set A is **asymmetric** if $(b, a) \notin R_3$ whenever $(a, b) \in R_3$

We note that $(2, 3) \in R_3$ while $(3, 2) \in R_3$ and thus R_3 is **not asymmetric**.

Step 4

4 of 5

Intransitive?

The relation R_3 on a set A is **intransitive** if $(a, c) \notin R_3$ whenever $(a, b) \in R_3$ and $(b, c) \in R_3$

We note that $(3, 2) \in R_3$ and $(2, 3) \in R_3$ while $(3, 3) \notin R_3$, and $(2, 3) \in R_3$ and $(3, 2) \in R_3$ while $(2, 2) \notin R_3$, thus R_3 is **intransitive**.

Result

5 of 5

Irreflexive

Not asymmetric

Intransitive

Exercise 44 Exercise 46

Exercise 46

Chapter 8, section 8.2, page 504

Discrete Mathematics with Applications
ISBN: 9781337694193

Table of contents

Solution

Verified

Step 1

1 of 5

DEFINITIONS

A relation R on a set A is **irreflexive** if $(a, a) \notin R$ for every element $a \in A$.

A relation R on a set A is **asymmetric** if $(b, a) \notin R$ whenever $(a, b) \in R$

A relation R one a set A is **intransitive** if $(a, c) \notin R$ whenever $(a, b) \in R$ and $(b, c) \in R$.

Step 2

2 of 5

SOLUTION

$$A = \{0, 1, 2, 3\}$$

$$R_2 = \{(1, 2), (2, 1), (1, 3), (3, 1)\}$$

$$\textbf{Irreflexive?}$$

The relation R_4 is irreflective if $(a, a) \notin R_4$ for every element $a \in A$.

Since $A = \{0, 1, 2, 3\}$, R_4 is irreflexive if it does not contain $(0, 0), (1, 1), (2, 2), (3, 3)$.

We note that R_4 does not contain $(0, 0), (1, 1), (2, 2)$ nor $(3, 3)$ and thus R_4 is **irreflexive**.

Step 3

3 of 5

$$\textbf{Asymmetric?}$$

The relation R_4 on a set A is **asymmetric** if $(b, a) \notin R_4$ whenever $(a, b) \in R_4$

We note that $(1, 2) \in R_2$ while $(2, 1) \in R_4$ and thus R_4 is **not asymmetric**.

Step 4

4 of 5

$$\textbf{Intransitive?}$$

The relation R_4 on a set A is **intransitive** if $(a, c) \notin R_4$ whenever $(a, b) \in R_4$ and $(b, c) \in R_4$

We note that

$$(1, 2) \in R_4 \text{ and } (2, 1) \in R_4, \text{ while } (1, 1) \notin R_4$$

$$(2, 1) \in R_4 \text{ and } (1, 2) \in R_4, \text{ while } (2, 2) \notin R_4$$

$$(2, 1) \in R_4 \text{ and } (1, 3) \in R_4, \text{ while } (2, 3) \notin R_4$$

$$(1, 3) \in R_4 \text{ and } (3, 1) \in R_4, \text{ while } (1, 1) \notin R_4$$

$$(3, 1) \in R_4 \text{ and } (1, 3) \in R_4, \text{ while } (3, 3) \notin R_4$$

$$(3, 1) \in R_4 \text{ and } (1, 2) \in R_4, \text{ while } (3, 2) \notin R_4$$

Thus R_4 is **intransitive**.

Result

5 of 5

Irreflexive

Not asymmetric

Intransitive

Exercise 45 Exercise 47

Exercise 47

Chapter 8, section 8.2, page 504

Discrete Mathematics with Applications
ISBN: 9781337694193
Table of contents

Solution

Verified

Step 1

1 of 5

DEFINITIONS

A relation R on a set A is **irreflexive** if $(a, a) \notin R$ for every element $a \in A$.

A relation R on a set A is **asymmetric** if $(b, a) \notin R$ whenever $(a, b) \in R$

A relation R one a set A is **intransitive** if $(a, c) \notin R$ whenever $(a, b) \in R$ and $(b, c) \in R$.

Step 2

2 of 5

SOLUTION

$$A = \{0, 1, 2, 3\}$$

$$R_5 = \{(0, 0), (0, 1), (0, 2), (1, 2)\}$$

Irreflexive?

The relation R_5 is irreflective if $(a, a) \notin R_5$ for every element $a \in A$.

Since $A = \{0, 1, 2, 3\}$, R_5 is irreflexive if it does not contain $(0, 0), (1, 1), (2, 2), (3, 3)$.

We note that R_5 contains $(0, 0)$ and thus R_5 is **not irreflexive**.

Step 3

3 of 5

Asymmetric?

The relation R_5 on a set A is asymmetric if $(b, a) \notin R_5$ whenever $(a, b) \in R_5$

We note that $(0, 0) \in R_5$, while $(0, 0) \in R_5$ and thus R_5 is **not asymmetric**.

Step 4

4 of 5

Intransitive?

The relation R_5 on a set A is intransitive if $(a, c) \notin R_5$ whenever $(a, b) \in R_5$ and $(b, c) \in R_5$

We note that $(0, 1) \in R_5$ and $(1, 2) \in R_5$, while $(0, 2) \in R_5$ and thus R_5 is **not intransitive**.

Result

5 of 5

Not irreflexive

Not asymmetric

Not intransitive

Exercise 46 Exercise 48

Exercise 48

Chapter 8, section 8.2, page 504

Discrete Mathematics with Applications
ISBN: 9781337694193

Table of contents

Solution

Verified

Step 1

1 of 5

DEFINITIONS

A relation R on a set A is **irreflexive** if $(a, a) \notin R$ for every element $a \in A$.

A relation R on a set A is **asymmetric** if $(b, a) \notin R$ whenever $(a, b) \in R$

A relation R one a set A is **intransitive** if $(a, c) \notin R$ whenever $(a, b) \in R$ and $(b, c) \in R$.

Step 2

2 of 5

SOLUTION

$$A = \{0, 1, 2, 3\}$$

$$R_6 = \{(0, 1), (0, 2)\}$$

$$\textbf{Irreflexive?}$$

The relation R_6 is irreflective if $(a, a) \notin R_6$ for every element $a \in A$.

Since $A = \{0, 1, 2, 3\}$, R_6 is irreflexive if it does not contain $(0, 0), (1, 1), (2, 2), (3, 3)$.

We note that R_6 does not contain $(0, 0), (1, 1), (2, 2)$ nor $(3, 3)$ and thus R_6 is **irreflexive**.

Step 3

3 of 5

$$\textbf{Asymmetric?}$$

The relation R_6 on a set A is asymmetric if $(b, a) \notin R_6$ whenever $(a, b) \in R_6$

We note that for all elements in R_6:

$$(0, 1) \in R_6, \text{ while } (1, 0) \notin R_6$$

$$(0, 2) \in R_6, \text{ while } (2, 0) \notin R_6$$

Thus R_6 is **asymmetric**.

Step 4

4 of 5

$$\textbf{Intransitive?}$$

The relation R_6 on a set A is intransitive if $(a, b) \in R_6$ and $(b, c) \in R_6$ implies $(a, c) \notin R_6$

We note that the if-statement "$(a, b) \in R_6$ and $(b, c) \in R_6$" is never true (as there exists no such pairs in R_6). However an if-then statement is always true when the if-statement is false and thus R_6 is **intransitive**.

Result

5 of 5

Irreflexive

Asymmetric

Intransitive

Exercise 47 Exercise 49

Exercise 49

Chapter 8, section 8.2, page 504

Discrete Mathematics with Applications
ISBN: 9781337694193

Table of contents

Solution

Verified

Step 1

1 of 5

DEFINITIONS

A relation R on a set A is **irreflexive** if $(a, a) \notin R$ for every element $a \in A$.

A relation R on a set A is **asymmetric** if $(b, a) \notin R$ whenever $(a, b) \in R$

A relation R one a set A is **intransitive** if $(a, c) \notin R$ whenever $(a, b) \in R$ and $(b, c) \in R$.

Step 2

2 of 5

SOLUTION

$$A = \{0, 1, 2, 3\}$$

$$R_7 = \{(0, 3), (2, 3)\}$$

Irreflexive?

The relation R_7 is irreflective if $(a, a) \notin R_7$ for every element $a \in A$.

Since $A = \{0, 1, 2, 3\}$, R_7 is irreflexive if it does not contain $(0, 0), (1, 1), (2, 2), (3, 3)$.

We note that R_7 does not contain $(0, 0), (1, 1), (2, 2)$ nor $(3, 3)$ and thus R_7 is **irreflexive**.

Step 3

3 of 5

Asymmetric?

The relation R_7 on a set A is asymmetric if $(b, a) \notin R_6$ whenever $(a, b) \in R_6$

We note that for all elements in R_7:

$$(0, 3) \in R_7, \text{ while } (3, 0) \notin R_7$$

$$(2, 3) \in R_7, \text{ while } (3, 2) \notin R_7$$

Thus R_7 is **asymmetric**.

Step 4

4 of 5

Intransitive?

The relation R_7 on a set A is intransitive if $(a, b) \in R_7$ and $(b, c) \in R_7$ implies $(a, c) \notin R_7$

We note that the if-statement "$(a, b) \in R_7$ and $(b, c) \in R_7$" is never true (as there exists no such pairs in R_7). However an if-then statement is always true when the if-statement is false and thus R_7 is **intransitive**.

Result

5 of 5

Irreflexive

Asymmetric

Intransitive

Exercise 48 Exercise 50

Exercise 50

Chapter 8, section 8.2, page 504

Discrete Mathematics with Applications
ISBN: 9781337694193

Table of contents

Solution

Verified

Step 1

1 of 5

DEFINITIONS

A relation R on a set A is **irreflexive** if $(a, a) \notin R$ for every element $a \in A$.

A relation R on a set A is **asymmetric** if $(b, a) \notin R$ whenever $(a, b) \in R$

A relation R one a set A is **intransitive** if $(a, c) \notin R$ whenever $(a, b) \in R$ and $(b, c) \in R$.

Step 2

2 of 5

SOLUTION

$$A = \{0, 1, 2, 3\}$$

$$R_8 = \{(0, 0), (1, 1)\}$$

Irreflexive?

The relation R_8 is irreflective if $(a, a) \notin R_8$ for every element $a \in A$.

Since $A = \{0, 1, 2, 3\}$, R_8 is irreflexive if it does not contain $(0, 0), (1, 1), (2, 2), (3, 3)$.

We note that R_8 contains $(0, 0)$ and thus R_8 is **not irreflexive**.

Step 3

3 of 5

Asymmetric?

The relation R_8 on a set A is asymmetric if $(b, a) \notin R_8$ whenever $(a, b) \in R_8$

We note that $(0, 0) \in R_8$, while $(0, 0) \in R_8$ and thus R_8 is **not asymmetric**.

Step 4

4 of 5

Intransitive?

The relation R_8 on a set A is intransitive if $(a, c) \notin R_8$ whenever $(a, b) \in R_8$ and $(b, c) \in R_8$

We note that $(0, 0) \in R_8$ and $(0, 0) \in R_8$, while $(0, 0) \in R_8$ and thus R_8 is **not intransitive**.

Result

5 of 5

Not irreflexive

Not asymmetric

Not intransitive

Exercise 49 Exercise 51

Exercise 51

Chapter 8, section 8.2, page 504

Discrete Mathematics with Applications
ISBN: 9781337694193

Table of contents

Solution

Verified

Step 1

1 of 3

DEFINITIONS

A relation R on a set A is **transitive** if $(a,b) \in R$ and $(b,c) \in R$ implies $(a,c) \in R$

Step 2

2 of 3

SOLUTION

$$A = \{0,1,2,3\}$$

$$R = \{(0,1),(0,2),(1,1),(1,3),(2,2),(3,0)\}$$

The transitive closure R_t of R needs to contain all ordered pairs in the relation R:

$$\{(0,1),(0,2),(1,1),(1,3),(2,2),(3,0)\} \subseteq R^t$$

The transitive closure of R is the smallest relation that contains R and that is transitive. Let us next determine which pairs to add using the transitive property.

$$(0,1) \in R^t \text{ and } (1,1) \in R^t \Rightarrow (0,1) \in R^t$$

$$(0,1) \in R^t \text{ and } (1,3) \in R^t \Rightarrow (0,3) \in R^t$$

$$(0,2) \in R^t \text{ and } (2,2) \in R^t \Rightarrow (0,2) \in R^t$$

$$(1,1) \in R^t \text{ and } (1,1) \in R^t \Rightarrow (1,1) \in R^t$$

$$(1,1) \in R^t \text{ and } (1,3) \in R^t \Rightarrow (1,3) \in R^t$$

$$(1,3) \in R^t \text{ and } (3,0) \in R^t \Rightarrow (1,0) \in R^t$$

$$(3,0) \in R^t \text{ and } (0,1) \in R^t \Rightarrow (3,1) \in R^t$$

$$(3,0) \in R^t \text{ and } (0,2) \in R^t \Rightarrow (3,2) \in R^t$$

$$(1,0) \in R^t \text{ and } (0,2) \in R^t \Rightarrow (1,2) \in R^t$$

$$(3,1) \in R^t \text{ and } (1,3) \in R^t \Rightarrow (3,3) \in R^t$$

$$(0,3) \in R^t \text{ and } (3,0) \in R^t \Rightarrow (0,0) \in R^t$$

We then note that we need to add the ordered pairs $(0,0),(0,3),(1,0),(1,2),(3,1),(3,2),(3,3)$ to the relation R to obtain the transitive closure:

$$\begin{aligned} R^t &= \{(0,1),(0,2),(1,1),(1,3),(2,2),(3,0)\} \cup \{(0,0),(0,3),(1,0),(1,2),(3,1),(3,2),(3,3)\} \\ &= \{(0,0),(0,1),(0,2),(0,3),(1,0),(1,1),(1,2),(1,3),(2,2),(3,0),(3,1),(3,2),(3,3)\} \end{aligned}$$

Result

3 of 3

$$\{(0,0),(0,1),(0,2),(1,0),(1,1),(1,2),(1,3),(2,2),(3,0),(3,1),(3,2),(3,3)\}$$

Exercise 50 Exercise 52

Exercise 52

Chapter 8, section 8.2, page 504

Discrete Mathematics with Applications
ISBN: 9781337694193
Table of contents

Solution

Verified

Step 1

1 of 3

DEFINITIONS

A relation R on a set A is **transitive** if $(a,b) \in R$ and $(b,c) \in R$ implies $(a,c) \in R$

Step 2

2 of 3

SOLUTION

$$A = \{0,1,2,3\}$$

$$S = \{(0,1),(0,2),(1,1),(1,3),(2,2),(3,0)\}$$

The transitive closure S_t of S needs to contain all ordered pairs in the relation S:

$$\{(0,0),(0,3),(1,0),(1,2),(2,0),(3,2)\} \subseteq S^t$$

The transitive closure of S is the smallest relation that contains S and that is transitive. Let us next determine which pairs to add using the transitive property.

$$(0,0) \in S^t \text{ and } (0,3) \in S^t \Rightarrow (0,3) \in S^t$$

$$(0,3) \in S^t \text{ and } (3,2) \in S^t \Rightarrow (0,2) \in S^t$$

$$(1,0) \in S^t \text{ and } (0,0) \in S^t \Rightarrow (1,0) \in S^t$$

$$(1,0) \in S^t \text{ and } (0,3) \in S^t \Rightarrow (1,3) \in S^t$$

$$(1,2) \in S^t \text{ and } (2,0) \in S^t \Rightarrow (1,0) \in S^t$$

$$(2,0) \in S^t \text{ and } (0,0) \in S^t \Rightarrow (2,0) \in S^t$$

$$(2,0) \in S^t \text{ and } (0,3) \in S^t \Rightarrow (2,3) \in S^t$$

$$(3,2) \in S^t \text{ and } (2,0) \in S^t \Rightarrow (3,0) \in S^t$$

$$(2,3) \in S^t \text{ and } (3,2) \in S^t \Rightarrow (2,2) \in S^t$$

$$(3,0) \in S^t \text{ and } (0,3) \in S^t \Rightarrow (3,3) \in S^t$$

We then note that we need to add the ordered pairs $(0,2),(1,3),(2,2),(2,3),(3,0),(3,3)$ to the relation S to obtain the transitive closure:

$$\begin{aligned} S^t &= \{(0,0),(0,3),(1,0),(1,2),(2,0),(3,2)\} \cup \{(0,2),(1,3),(2,2),(2,3),(3,0),(3,3)\} \\ &= \{(0,0),(0,2),(0,3),(1,0),(1,2),(1,3),(2,0),(2,2),(2,3),(3,0),(3,2),(3,3)\} \end{aligned}$$

Result

3 of 3

$$\{(0,0),(0,2),(0,3),(1,0),(1,2),(1,3),(2,0),(2,2),(2,3),(3,0),(3,2),(3,3)\}$$

Exercise 51 Exercise 53

Exercise 53

Chapter 8, section 8.2, page 505

Discrete Mathematics with Applications
ISBN: 9781337694193

Table of contents

Solution

Verified

Step 1

1 of 4

DEFINITIONS

A relation R on a set A is **transitive** if $(a,b) \in R$ and $(b,c) \in R$ implies $(a,c) \in R$

Step 2

2 of 4

SOLUTION

$$A = \{0,1,2,3\}$$

$$T = \{(0,2),(1,0),(2,3),(3,1)\}$$

The transitive closure T_t of T needs to contain all ordered pairs in the relation T:

$$\{(0,2),(1,0),(2,3),(3,1)\} \subseteq T^t$$

The transitive closure of T is the smallest relation that contains T and that is transitive. Let us next determine which pairs to add using the transitive property.

$$(0,2) \in T^t \text{ and } (2,3) \in T^t \Rightarrow (0,3) \in T^t$$

$$(1,0) \in T^t \text{ and } (0,2) \in T^t \Rightarrow (1,2) \in T^t$$

$$(2,3) \in T^t \text{ and } (3,1) \in T^t \Rightarrow (2,1) \in T^t$$

$$(3,1) \in T^t \text{ and } (1,0) \in T^t \Rightarrow (3,0) \in T^t$$

$$(0,3) \in T^t \text{ and } (3,0) \in T^t \Rightarrow (0,0) \in T^t$$

$$(0,3) \in T^t \text{ and } (3,1) \in T^t \Rightarrow (0,1) \in T^t$$

$$(1,0) \in T^t \text{ and } (0,1) \in T^t \Rightarrow (1,1) \in T^t$$

$$(1,0) \in T^t \text{ and } (0,3) \in T^t \Rightarrow (1,3) \in T^t$$

$$(2,3) \in T^t \text{ and } (3,0) \in T^t \Rightarrow (2,0) \in T^t$$

$$(3,1) \in T^t \text{ and } (1,2) \in T^t \Rightarrow (2,2) \in T^t$$

$$(3,0) \in T^t \text{ and } (0,2) \in T^t \Rightarrow (3,2) \in T^t$$

$$(3,0) \in T^t \text{ and } (0,3) \in T^t \Rightarrow (3,3) \in T^t$$

Step 3

3 of 4

We then note that we need to add the ordered pairs

$$(0,0),(0,1),(0,3),(1,1),(1,2),(1,3),(2,0),(2,1),(2,2),(3,0),(3,2),(3,3)$$

to the relation T to obtain the transitive closure:

$$\begin{aligned} T^t &= \{(0,2),(1,0),(2,3),(3,1)\} \cup \{(0,0),(0,1),(0,3),(1,1),(1,2),(1,3),(2,0),(2,1),(2,2),(3,0),(3,2), \\ &= \{(0,0),(0,1),(0,2),(0,3),(1,0),(1,1),(1,2),(1,3)(2,0),(2,1),(2,2),(2,3),(3,0),(3,1),(3,2),(3,3 \end{aligned}$$

Result

4 of 4

$$\{(0,0),(0,1),(0,2),(0,3),(1,0),(1,1),(1,2),(1,3)(2,0),(2,1),(2,2),(2,3),(3,0),(3,1),(3,2),(3,3)\}$$

Exercise 52 Exercise 54

Exercise 54

Chapter 8, section 8.2, page 505

Discrete Mathematics with Applications
ISBN: 9781337694193

Table of contents

Solution

Verified

Step 1

1 of 3

DEFINITIONS

A relation R on a set A is **reflexive** if $(a, a) \in R$ for every element $a \in A$.

A relation R on a set A is **symmetric** if $(b, a) \in R$ whenever $(a, b) \in R$

A relation R on a set A is **transitive** if $(a, b) \in R$ and $(b, c) \in R$ implies $(a, c) \in R$

Step 2

2 of 3

SOLUTION

We need to create an algorithm that will check if some relation is reflexive. The input will be a relation

Result

3 of 3

Input: $A = \{a[1], a[2], ..., a[n]\}$, R\textit{[a relation on the set A]}$

Algorithm body:

$answer$:="reflexive"

i:=1

while $i \leq n$ and $answer$="reflexive"

if $(a[i], a[i]) \notin R$ **then**

$answer$:="not reflexive"

i:=$i + 1$

Output: $answer$

Exercise 53 Exercise 55

Exercise 55

Chapter 8, section 8.2, page 505

Discrete Mathematics with Applications
ISBN: 9781337694193

Table of contents

Solution

Verified

Step 1

1 of 3

DEFINITIONS

A relation R on a set A is **reflexive** if $(a, a) \in R$ for every element $a \in A$.

A relation R on a set A is **symmetric** if $(b, a) \in R$ whenever $(a, b) \in R$

A relation R on a set A is **transitive** if $(a, b) \in R$ and $(b, c) \in R$ implies $(a, c) \in R$

Step 2

2 of 3

SOLUTION

We need to create an algorithm that will check if some relation is symmetric. The input will be a relatio

Result

3 of 3

Input: $A = \{a[1], a[2], ..., a[n]\}$, R\textit{[a relation on the set A]}$

Algorithm body:

$answer$:="symmetric"

i:=1

while $i \leq n$ and $answer$="symmetric"

j:=1

while $j \leq n$ and $answer$="symmetric"

if $(a[i], a[j]) \in R$ and $(a[j], a[i]) \notin R$ **then**

$answer$:="not symmetric"

j:=$j + 1$

i:=$i + 1$

Output: $answer$

Exercise 54 Exercise 56

Exercise 56

Chapter 8, section 8.2, page 505

Discrete Mathematics with Applications
ISBN: 9781337694193

Table of contents

Solution

Verified

Step 1

1 of 3

DEFINITIONS

A relation R on a set A is **reflexive** if $(a, a) \in R$ for every element $a \in A$.

A relation R on a set A is **symmetric** if $(b, a) \in R$ whenever $(a, b) \in R$

A relation R on a set A is **transitive** if $(a, b) \in R$ and $(b, c) \in R$ implies $(a, c) \in R$

Step 2

2 of 3

SOLUTION

We need to create an algorithm that will check if some relation is transitive. The input will be a relatio

Result

3 of 3

Input: $A = \{a[1], a[2], ..., a[n]\}$, R\textit{[a relation on the set A]}$

Algorithm body:

$answer$:="transitive"

i:=1

while $i \leq n$ and $answer$="transitive"

j:=1

while $j \leq n$ and $answer$="transitive"

k:=1

while $k \leq n$ and $answer$="transitive"

if $(a[i], a[j]) \in R$ and $(a[j], a[k]) \in R$ and $(a[i], a[k]) \notin R$ **then**

$answer$:="not transitive"

k:=$k + 1$

j:=$j + 1$

i:=$i + 1$

Output: $answer$

Exercise 55 Exercise 1

Exercise 1

Chapter 8, section 8.3, page 520

Discrete Mathematics with Applications
ISBN: 9781337694193
Table of contents

Solution

Verified

Step 1

1 of 6

DEFINITIONS

A relation R on a set A is **reflexive** if $(a, a) \in R$ for every element $a \in A$.

A relation R on a set A is **symmetric** if $(b, a) \in R$ whenever $(a, b) \in R$

A relation R on a set A is **transitive** if $(a, b) \in R$ and $(b, c) \in R$ implies $(a, c) \in R$

A relation R is an **equivalence relation** if the relation R is transitive, symmetric and reflexive.

Step 2

2 of 6

SOLUTION

$$S = \{a, b, c, d, e\}$$

$$a\,R\,b$$

$$b\,R\,c$$

$$d\,R\,e$$

(a) We need to determine which of the following $c\,R\,b, c\,R\,c, a\,R\,c, b\,R\,a, a\,R\,d, e\,R\,a, e\,R\,d, c\,R\,a$ need to be true for the relation R on S to be reflexive.

R is reflexive if it contains (s, s) for every element $s \in S$ and thus $s\,R\,s$ needs to be true for every element $s \in S$.

Thus $a\,R\,a, b\,R\,b, c\,R\,c, d\,R\,d$ and $e\,R\,e$ all need to be true. However, only $c\,R\,c$ is listed and thus $c\,R\,c$ needs to be true.

Step 3

3 of 6

(b) We need to determine which of the following $c\,R\,b, c\,R\,c, a\,R\,c, b\,R\,a, a\,R\,d, e\,R\,a, e\,R\,d, c\,R\,a$ need to be true for the relation R on S to be symmetric.

R is symmetric if it contains $(t, s) \in R$ whenever $(s, t) \in R$ and thus $t\,R\,s$ needs to be true when we know that $s\,R\,t$.

Given is that $a\,R\,b, b\,R\,c$ and $d\,R\,e$ are true

$$a\,R\,b \Rightarrow b\,R\,a$$

$$b\,R\,c \Rightarrow c\,R\,b$$

$$d\,R\,e \Rightarrow e\,R\,d$$

Thus we then note that $b\,R\,a, c\,R\,b$ and $e\,R\,d$ need to be true for R to be symmetric.

Step 4

4 of 6

(c) We need to determine which of the following $c\,R\,b, c\,R\,c, a\,R\,c, b\,R\,a, a\,R\,d, e\,R\,a, e\,R\,d, c\,R\,a$ need to be true for the relation R on S to be transitive.

R is transitive if it contains $(s, u) \in R$ whenever $(s, t) \in R$ and $(t, u) \in R$ thus $u\,R\,t$ needs to be true when we know that $s\,R\,t$.

Given is that $a\,R\,b, b\,R\,c$ and $d\,R\,e$ are true

$$a\,R\,b \text{ and } b\,R\,c \Rightarrow a\,R\,c$$

Thus we then note that $a\,R\,c$ needs to be true for R to be transitive.

Step 5

5 of 6

(d) We need to determine which of the following $c\,R\,b, c\,R\,c, a\,R\,c, b\,R\,a, a\,R\,d, e\,R\,a, e\,R\,d, c\,R\,a$ need to be true for the relation R on S to be an equivalence relation.

Since an equivalence relation is a relation that is reflexive, symmetric and transitive, the elements in part (a), (b) and (c) all need to be contained in the relation R (but there might be some additional elements that we need to add).

$$c\,R\,c$$

$$b\,R\,a$$

$$c\,R\,b$$

$$e\,R\,d$$

$$a\,R\,c$$

However, we next need to check if the elements added due to the transitivity property in part (c) do not require any more elements to be added to make the relation symmetric. We then note that $c\,R\,a$ needs to be true as well, because $a\,R\,c$ needs to be true.

$$a\,R\,c \Rightarrow c\,R\,a$$

Finally, we note that the remaining relationship also satisfies the transitivity property (the added elements do not imply that any additional elements need to be added for the relation to be transitive).

Thus the statements $c\,R\,c, b\,R\,a, c\,R\,b, e\,R\,d, a\,R\,c, c\,R\,a$ all need to be true.

Result

6 of 6

(a) $c\,R\,c$

(b) $b\,R\,a, c\,R\,b$ and $e\,R\,d$

(c) $a\,R\,c$

(d) $c\,R\,c, b\,R\,a, c\,R\,b, e\,R\,d, a\,R\,c, c\,R\,a$

Exercise 56 Exercise 2

Exercise 2

Chapter 8, section 8.3, page 520

Discrete Mathematics with Applications
ISBN: 9781337694193
Table of contents

Solution

Verified

Step 1

1 of 4

(a)\ Since $\{0,2\}$ is a subset of the partition,

$$\begin{aligned} 0\ R\ 0 &\quad \text{because both 0 and 0 are in } \{0,2\} \\ 0\ R\ 2 &\quad \text{because both 0 and 2 are in } \{0,2\} \\ 2\ R\ 0 &\quad \text{because both 2 and 0 are in } \{0,2\} \\ 2\ R\ 2 &\quad \text{because both 2 and 2 are in } \{0,2\} \end{aligned}$$

Since $\{1\}$ is a subset of the partition,

$$1\ R\ 1 \quad \text{because both 1 and 1 are in } \{1\}$$

Since $\{3,4\}$ is a subset of the partition,

$$\begin{aligned} 3\ R\ 3 &\quad \text{because both 3 and 3 are in } \{3,4\} \\ 3\ R\ 4 &\quad \text{because both 3 and 4 are in } \{3,4\} \\ 4\ R\ 3 &\quad \text{because both 4 and 3 are in } \{3,4\} \\ 4\ R\ 4 &\quad \text{because both 4 and 4 are in } \{3,4\} \end{aligned}$$

Hence,

$$R = \{(0,0),(0,2),(2,0),(2,2),(1,1),(3,3),(3,4),(4,3),(4,4)\}$$

Step 2

2 of 4

(b)\ Since $\{0\}$ is a subset of the partition,

$$0\ R\ 0 \quad \text{because both 0 and 0 are in } \{0\}$$

Since $\{1,3,4\}$ is a subset of the partition,

$$\begin{aligned} 1\ R\ 1 &\quad \text{because both 1 and 1 are in } \{1,3,4\} \\ 1\ R\ 3 &\quad \text{because both 1 and 3 are in } \{1,3,4\} \\ 1\ R\ 4 &\quad \text{because both 1 and 4 are in } \{1,3,4\} \\ \\ 3\ R\ 1 &\quad \text{because both 3 and 1 are in } \{1,3,4\} \\ 3\ R\ 3 &\quad \text{because both 3 and 3 are in } \{1,3,4\} \\ 3\ R\ 4 &\quad \text{because both 3 and 4 are in } \{1,3,4\} \\ \\ 4\ R\ 1 &\quad \text{because both 4 and 1 are in } \{1,3,4\} \\ 4\ R\ 3 &\quad \text{because both 4 and 3 are in } \{1,3,4\} \\ 4\ R\ 4 &\quad \text{because both 4 and 4 are in } \{1,3,4\} \end{aligned}$$

Since $\{2\}$ is a subset of the partition,

$$2\ R\ 2 \quad \text{because both 2 and 2 are in } \{2\}$$

Hence,

$$\begin{aligned} R = \{&(0,0),(1,1),(1,3),(1,4),(3,1),(3,3), \\ &(3,4),(4,1),(4,3),(4,4),(2,2)\} \end{aligned}$$

Step 3

3 of 4

(c)\ Since $\{0\}$ is a subset of the partition,

$$0\ R\ 0 \quad \text{because both 0 and 0 are in } \{0\}$$

Since $\{1,2,3,4\}$ is a subset of the partition,

$$\begin{aligned} 1\ R\ 1 &\quad \text{because both 1 and 1 are in } \{1,2,3,4\} \\ 1\ R\ 2 &\quad \text{because both 1 and 2 are in } \{1,2,3,4\} \\ 1\ R\ 3 &\quad \text{because both 1 and 3 are in } \{1,2,3,4\} \\ 1\ R\ 4 &\quad \text{because both 1 and 4 are in } \{1,2,3,4\} \\ \\ 2\ R\ 1 &\quad \text{because both 2 and 1 are in } \{1,2,3,4\} \\ 2\ R\ 2 &\quad \text{because both 2 and 2 are in } \{1,2,3,4\} \\ 2\ R\ 3 &\quad \text{because both 2 and 3 are in } \{1,2,3,4\} \\ 2\ R\ 4 &\quad \text{because both 2 and 4 are in } \{1,2,3,4\} \\ \\ 3\ R\ 1 &\quad \text{because both 3 and 1 are in } \{1,2,3,4\} \\ 3\ R\ 2 &\quad \text{because both 3 and 2 are in } \{1,2,3,4\} \\ 3\ R\ 3 &\quad \text{because both 3 and 3 are in } \{1,2,3,4\} \\ 3\ R\ 4 &\quad \text{because both 3 and 4 are in } \{1,2,3,4\} \\ \\ 4\ R\ 1 &\quad \text{because both 4 and 1 are in } \{1,2,3,4\} \\ 4\ R\ 2 &\quad \text{because both 4 and 2 are in } \{1,2,3,4\} \\ 4\ R\ 3 &\quad \text{because both 4 and 3 are in } \{1,2,3,4\} \\ 4\ R\ 4 &\quad \text{because both 4 and 4 are in } \{1,2,3,4\} \end{aligned}$$

Hence,

$$\begin{aligned} R = \{&(0,0),(1,1),(1,2),(1,3),(1,4),(3,1),(3,2), \\ &(3,3),(3,4),(4,1),(4,2),(4,3),(4,4)\} \end{aligned}$$

Result

4 of 4

$$(a)\ R = \{(0,0),(0,2),(2,0),(2,2),(1,1),(3,3),(3,4),(4,3),(4,4)\}$$

$$\begin{aligned} (b)\ R = \{&(0,0),(1,1),(1,3),(1,4),(3,1),(3,3), \\ &(3,4),(4,1),(4,3),(4,4),(2,2)\} \end{aligned}$$

$$\begin{aligned} (c)\ R = \{&(0,0),(1,1),(1,2),(1,3),(1,4),(3,1),(3,2), \\ &(3,3),(3,4),(4,1),(4,2),(4,3),(4,4)\} \end{aligned}$$

Exercise 1 Exercise 3

Exercise 3

Chapter 8, section 8.3, page 520

Discrete Mathematics with Applications
ISBN: 9781337694193

Table of contents

Solution

Verified

Step 1

1 of 3

Siolution:

Observing the given relation $R = \{(0,0),(0,4),(1,1),(1,3),(2,2),(3,1),(3,3),(4,0),(4,4)\}$ we have that the directed graph for R looks like follows below.

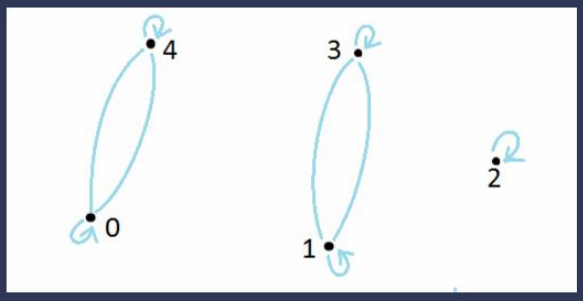

Step 2

2 of 3

In order to obtain the distinct equivalence classes, we will first find the equivalence class of every element of the set $A = \{0,1,2,3,4\}$.

$$[\,0\,] = \{x \in A |\, xR\,0\} = \{0,4\}$$

$$[\,1\,] = \{x \in A |\, xR\,1\} = \{1,3\}$$

$$[\,2\,] = \{x \in A |\, xR\,2\} = \{2\}$$

$$[\,3\,] = \{x \in A |\, xR\,3\} = \{1,3\}$$

$$[\,4\,] = \{x \in A |\, xR\,4\} = \{0,4\}$$

As we can see there are some classes that are equal: $[\,0\,] = [\,4\,]$ and $[\,1\,] = [\,3\,]$. Since we are looking just for the distinct equivalence classes of the observed equivalence relation R, those are:

$$\{0,4\}\,,\ \{2\}\,,\ \{1,3\}$$

Result

3 of 3

The distinct equivalence classes of the relation R are $\{0,4\}\,,\ \{2\}\,,\ \{1,3\}$.

Exercise 2 Exercise 4

Exercise 4

Chapter 8, section 8.3, page 520

Discrete Mathematics with Applications
ISBN: 9781337694193

Table of contents

Solution

Verified

Step 1

1 of 3

Siolution:

Observing the given relation $R = \{(a,a),(b,b),(b,d),(c,c),(d,b),(d,d)\}$ we have that the directed graph for R looks like follows below.

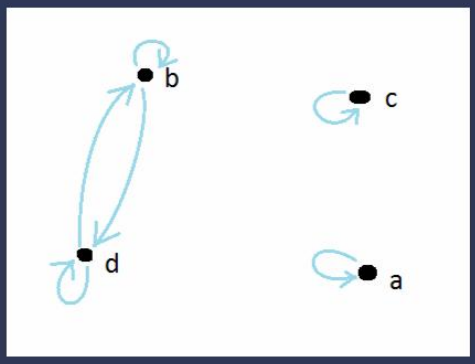

Step 2

2 of 3

In order to obtain the distinct equivalence classes, we will first find the equivalence class of every element of the set $A = \{a,b,c,d\}$.

$$[\,a\,] = \{x \in A |\ xR\,a\} = \{a\}$$

$$[\,b\,] = \{x \in A |\ xR\,b\} = \{b,d\}$$

$$[\,c\,] = \{x \in A |\ xR\,c\} = \{c\}$$

$$[\,d\,] = \{x \in A |\ xR\,d\} = \{b,d\}$$

As we can see there are two classes that are equal: $[\,b\,] = [\,d\,]$ Since we are looking just for the distinct equivalence classes of the observed equivalence relation R, those are:

$$\{a\}\ ,\ \{b,d\}\ ,\ \{c\}$$

Result

3 of 3

There are three distinct equivalence classes of the observed relation of equivalence R and those are $\{a\}\ ,\ \{b,d\}\ ,\ \{c\}$.

Exercise 3 Exercise 5

Exercise 5

Chapter 8, section 8.3, page 521

Discrete Mathematics with Applications
ISBN: 9781337694193

Table of contents

Solution

Verified

Step 1

1 of 3

Solution:

Here the given set $A = \{1, 2, 3, 4, ..., 20\}$ has a lot more elements compared to the ones in the previous tasks, and so we will not give the direction graph. It is not impossible, but it would have plenty arrows which would make it confusing and jammed.

Another difference is that the relation is not given as the set of ordered pairs, rather we have a descriptive property which defines all the pairs in it:

$$\forall x, y \in A \;\; x \, R \, y \iff 4|(x-y)$$

We have to obtain the equivalence classes for the elements 1, 2, 3, 4 and 5. First let's obtain the equivalence class for 1. Since we know that R is the equivalence relation, we can claim that $1 \in [1]$ (because of reflexivity of R). Really, 4| (1-1)=0.

All of the elements 2, 3 and 4 do not belong in $[1]$ because

$$4 \nmid (2-1) \;\; ; \;\; 4 \nmid (3-1) \;\; ; \;\; 4 \nmid (4-1)$$

In order for this difference to be divisible by 4, we must enlarge the minuend by 4. Therefore, the next element in $[1]$ will be 5. Really, $4|(5-1) = 4$. Following this logic, we have that the equivalence class of 1 equals

$$[1] = \{1, 5, 9, 13, 17\}$$

because $4|(9-1)$, $4|(13-1)$, $4|(17-1)$ and this holds only for those elements of A.

Now we will obtain the class [2]. We have that

$$4 \nmid (1-2) \;,\; 4|(2-2) \;,\; 4 \nmid (3-2) \;,\; 4 \nmid (4-2) \;,\; 4 \nmid (5-2) \;,\; 4|(6-2)...$$

As we can see every fourth element starting with 2 is the element of [2], hence

$$[2] = \{2, 6, 10, 14, 18\}$$

Step 2

2 of 3

We do not have to explain this further, we just find the first element that belongs to a certain class and then just add 4 to that consequently. Therefore,

$$[3] = \{3, 7, 11, 15, 19\}$$

$$[4] = \{4, 8, 12, 16, 20\}$$

$$[5] = \{1, 5, 9, 13, 17\}$$

As we can see, there are two equal classes [1] and [5]. Hence, we have 4 distinct equivalence classes:

$$\boxed{\{1, 5, 9, 13, 17\} \,,\, \{2, 6, 10, 14, 18\} \,,\, \{3, 7, 11, 15, 19\} \,,\, \{4, 8, 12, 16, 20\}}$$

Result

3 of 3

There are four distinct equivalence classes of the observed relation of equivalence R and those are $\{1, 5, 9, 13, 17\}$, $\{2, 6, 10, 14, 18\}$, $\{3, 7, 11, 15, 19\}$, $\{4, 8, 12, 16, 20\}$.

Exercise 4 Exercise 6

Exercise 6

Chapter 8, section 8.3, page 521

Discrete Mathematics with Applications
ISBN: 9781337694193

Table of contents

Solution

Verified

Step 1

1 of 3

Solution:

Here the given set $A = \{-4, -3, -2, -1, 0, 1, 2, 3, 4, 5\}$ has not that many but still a lot more elements for drawing the direction graph.

Here we also do not have the relation given as the set of ordered pairs, rather we have a descriptive property which defines all the pairs in it:

$$\forall x, y \in A \;\; x \, R \, y \iff 3|(x-y)$$

We have to obtain the equivalence classes for the elements 0, 1, 2 and 3. First let's obtain the equivalence class for 0. By the definition of the equivalence class, we have this

$$[0] = \{x \in A | \; x \, R \, 0\}$$

We will start checking whether the integers from A belong to [0] in the given order.

$$3 \nmid (-4-0) \; , \; 3|(-3-0) \; , \; 3 \nmid (-2-0) \; , \; 3 \nmid (-1-0) \; , \; 3|(0-0) = 0$$

$$3 \nmid (1-0) \; , \; 3 \nmid (2-0) \; , \; 3|(3-0) \; , \; 3 \nmid (4-0) \; , \; 3 \nmid (5-0)$$

Therefore, $[0] = \{-3, 0, 3\}$. As we can see, we find the least element from A that belongs to the equivalence class and then just add 3 to it as long as the obtained value is in A. All those results belong to the observed class.

For the equivalence class [1], we have this:

$$3 \nmid (-4-1) \; , \; 3 \nmid (-3-1) \; , \; 3|(-2-1) \; , \; 3 \nmid (-1-1) \ldots$$

Like we said in the observation of [0] all of the elements of those equivalent classes are obtained when we add 3 consequently to the least element that belongs to that class, hence:

$$[1] = \{-2, 1, 4\}$$

When we observe [2], we have this: $3|(-4-2)$ and the other elements are -4+3, -4+3+3, -4+3+3+3, hence:

$$[2] = \{-4, -1, 2, 5\}$$

Finally, when we obtain [3], we have this: $3 \nmid (-4-3) \; , \; 3|(-3-3)$. Therefore, the lowest integer from A that is in [3] is -3, and the others are -3+3, -3+3+3, hence:

$$[3] = \{-3, 0, 3\}$$

Step 2

2 of 3

As we can see, there are two equal classes [0] and [3]. Hence, we have 3 distinct equivalence classes:

$$\boxed{\{-3, 0, 3\} \; , \; \{-2, 1, 4\} \; , \; \{-4, -1, 2, 5\}}$$

Result

3 of 3

There are three distinct equivalence classes of the observed relation of equivalence R and those are $\{-3, 0, 3\} \; , \; \{-2, 1, 4\} \; , \; \{-4, -1, 2, 5\}$.

Exercise 5 Exercise 7

Exercise 7

Chapter 8, section 8.3, page 521

Discrete Mathematics with Applications
ISBN: 9781337694193

Table of contents

Solution

Verified

$A = \{(1,3), (2,4), (-4,-8), (3,9), (1,5), (3,6)\}$

For all $(a,b), (c,d) \in A$,

$(a,b) \, R \, (c,d) \Leftrightarrow ad = cd$

Distinct Equivalence classes:

$[(1,3)] = \{(a,b) \in A : (a,b) \, R \, (1,3)\}$
$= \{(a,b) \in A : 3a = b\}$
$= \{(1,3), (3,9)\}$

$[(2,4)] = \{(a,b) \in A : (a,b) \, R \, (2,4)\}$
$= \{(a,b) \in A : 4a = 2b\}$
$= \{(2,4), (-4,-8), (3,6)\}$

$[(1,5)] = \{(a,b) \in A : (a,b) \, R \, (1,5)\}$
$= \{(a,b) \in A : 5a = b\}$
$= \{(1,5)\}$

Therefore, distinct equivalence classes are
$\{(1,3), (3,9)\}, \{(2,4), (-4,-8), (3,6)\}, \{(1,5)\}$.

Exercise 6 Exercise 8

Exercise 8

Chapter 8, section 8.3, page 521

Discrete Mathematics with Applications
ISBN: 9781337694193

Table of contents

Solution

Verified

Step 1

1 of 4

DEFINITIONS

A **partition** of a set S is a collection of ***disjoint subsets*** whose union is equal to the set S.

The **equivalence class** of a is the set of all elements that are relation to a. Notation: $[a]_R$

The **power set** of S is the set of all subsets of S.

Notation: $\mathcal{P}(S)$

Step 2

2 of 4

SOLUTION

$$\begin{aligned} X &= \{a, b, c\} \\ A &= \mathcal{P}(X) \\ R &= \{(B, C) \in A \times A \mid B \text{ has the same number of elements as } C\} \end{aligned}$$

Let us first determine all elements in A, which are thus all subsets of X:

$$A = \{\emptyset, \{a\}, \{b\}, \{c\}, \{a, b\}, \{a, c\}, \{b, c\}, \{a, b, c\}\}$$

Two elements are then related if they contain the same number of elements:

$$\begin{aligned} R = \{&(\emptyset, \emptyset), (\{a\}, \{a\}), (\{a\}, \{b\}), (\{a\}, \{c\}), (\{b\}, \{a\}), (\{b\}, \{b\}), (\{b\}, \{c\}), \\ &(\{c\}, \{a\}), (\{c\}, \{b\}), (\{c\}, \{c\}), (\{a, b\}, \{a, b\}), (\{a, b\}, \{a, c\}), (\{a, b\}, \{b, c\}) \\ &(\{a, c\}, \{a, b\}), (\{a, c\}, \{a, c\}), (\{a, c\}, \{b, c\}), (\{b, c\}, \{a, b\}), (\{b, c\}, \{a, c\}), \\ &(\{b, c\}, \{b, c\}), (\{a, b, c\}, \{a, b, c\})\} \end{aligned}$$

Let us next group the ordered pairs in R that have at least one common element (with at least one of the other elements in the group).

$$\begin{aligned} \text{First group: } &(\emptyset, \emptyset) \\ \text{Second group: } &(\{a\}, \{a\}), (\{a\}, \{b\}), (\{a\}, \{c\}), \\ &(\{b\}, \{a\}), (\{b\}, \{b\}), (\{b\}, \{c\}), \\ &(\{c\}, \{a\}), (\{c\}, \{b\}), (\{c\}, \{c\}) \\ \text{Third group: } &(\{a, b\}, \{a, b\}), (\{a, b\}, \{a, c\}), (\{a, b\}, \{b, c\}) \\ &(\{a, c\}, \{a, b\}), (\{a, c\}, \{a, c\}), (\{a, c\}, \{b, c\}) \\ &(\{b, c\}, \{a, b\}), (\{b, c\}, \{a, c\}), (\{b, c\}, \{b, c\}) \\ \text{Fourth group: } &(\{a, b, c\}, \{a, b, c\}) \end{aligned}$$

Step 3

3 of 4

Each group then corresponds with an equivalence class, while the equivalence class is the set containing all elements mentioned in the ordered pairs of the group.

$$\begin{aligned} \text{Equivalence class first group: } &\{\emptyset\} \\ \text{Equivalence class second group: } &\{\{a\}, \{b\}, \{c\}\} \\ \text{Equivalence class third group: } &\{\{a, b\}, \{a, c\}, \{b, c\}\} \\ \text{Equivalence class fourth group: } &\{\{a, b, c\}\} \end{aligned}$$

Thus the equivalence classes are then $\{\emptyset\}, \{\{a\}, \{b\}, \{c\}\}, \{\{a, b\}, \{a, c\}, \{b, c\}\}, \{\{a, b, c\}\}$

Result

4 of 4

$$\{\emptyset\}, \{\{a\}, \{b\}, \{c\}\}, \{\{a, b\}, \{a, c\}, \{b, c\}\}, \{\{a, b, c\}\}$$

Exercise 7 Exercise 9

Exercise 9

Chapter 8, section 8.3, page 521

Discrete Mathematics with Applications
ISBN: 9781337694193

Table of contents

Solution

Verified

Step 1

1 of 4

DEFINITIONS

A **partition** of a set S is a collection of ***disjoint subsets*** whose union is equal to the set S.

The **equivalence class** of a is the set of all elements that are relation to a. Notation: $[a]_R$

The **power set** of S is the set of all subsets of S.

Notation: $\mathcal{P}(S)$

Step 2

2 of 4

SOLUTION

$$\begin{aligned} X &= \{-1, 0, 1\} \\ A &= \mathcal{P}(X) \\ R &= \{(B, C) \in A \times A \mid \text{Sum of elements in } B = \text{Sum of elements in } C\} \end{aligned}$$

Let us first determine all elements in A, which are thus all subsets of X:

$$A = \{\emptyset, \{-1\}, \{0\}, \{1\}, \{-1, 0\}, \{-1, 1\}, \{0, 1\}, \{-1, 0, 1\}\}$$

Two elements are then related if the sum of the elements of the sets are the same ($-1 + 0 = -1$, $-1 + 1 = 0$, $0 + 1 = 1$ and $-1 + 0 + 1 = 0$):

$$\begin{aligned} R = \{&(\emptyset, \emptyset), (\emptyset, \{0\}), (\emptyset, \{-1, 1\}), (\emptyset, \{-1, 0, 1\}), \\ &(\{0\}, \emptyset), (\{0\}, \{0\}), (\{0\}, \{-1, 1\}), (\{0\}, \{-1, 0, 1\}), \\ &(\{-1, 1\}, \emptyset), (\{-1, 1\}, \{0\}), (\{-1, 1\}, \{-1, 1\}), (\{-1, 1\}, \{-1, 0, 1\}), \\ &(\{-1, 0, 1\}, \emptyset), (\{-1, 0, 1\}, \{0\}), (\{-1, 0, 1\}, \{-1, 1\}), (\{-1, 0, 1\}, \{-1, 0, 1\}), \\ &(\{-1\}, \{-1\}), (\{-1\}, \{-1, 0\}), (\{-1, 0\}), \{-1\}), (\{-1, 0\}), \{-1, 0\}), \\ &(\{1\}, \{1\}), (\{1\}, \{1, 0\}), (\{1, 0\}), \{1\}), (\{1, 0\}), \{1, 0\})\} \end{aligned}$$

Let us next group the ordered pairs in R that have at least one common element (with at least one of the other elements in the group).

$$\begin{aligned} \text{First group: } &\{(\emptyset, \emptyset), (\emptyset, \{0\}), (\emptyset, \{-1, 1\}), (\emptyset, \{-1, 0, 1\}), (\{0\}, \emptyset), (\{0\}, \{0\}), \\ &(\{0\}, \{-1, 1\}), (\{0\}, \{-1, 0, 1\}), (\{-1, 1\}, \emptyset), (\{-1, 1\}, \{0\}), \\ &(\{-1, 1\}, \{-1, 1\}), (\{-1, 1\}, \{-1, 0, 1\}), (\{-1, 0, 1\}, \emptyset), (\{-1, 0, 1\}, \{0\}), \\ &(\{-1, 0, 1\}, \{-1, 1\}), (\{-1, 0, 1\}, \{-1, 0, 1\})\} \\ \text{Second group: } &(\{-1\}, \{-1\}), (\{-1\}, \{-1, 0\}), (\{-1, 0\}), \{-1\}), (\{-1, 0\}), \{-1, 0\}) \\ \text{Third group: } &(\{1\}, \{1\}), (\{1\}, \{1, 0\}), (\{1, 0\}), \{1\}), (\{1, 0\}), \{1, 0\}) \end{aligned}$$

Step 3

3 of 4

Each group then corresponds with an equivalence class, while the equivalence class is the set containing all elements mentioned in the ordered pairs of the group.

$$\begin{aligned} \text{Equivalence class first group: } &\{\emptyset, \{0\}, \{-1, 1\}, \{-1, 0, 1\}\} \\ \text{Equivalence class second group: } &\{\{-1\}, \{-1, 0\}\} \\ \text{Equivalence class third group: } &\{\{1\}, \{1, 0\}\} \end{aligned}$$

Thus the equivalence classes are then $\{\emptyset, \{0\}, \{-1, 1\}, \{-1, 0, 1\}\}, \{\{-1\}, \{-1, 0\}\}, \{\{1\}, \{1, 0\}\}$

Result

4 of 4

$$\{\emptyset, \{0\}, \{-1, 1\}, \{-1, 0, 1\}\}, \{\{-1\}, \{-1, 0\}\}, \{\{1\}, \{1, 0\}\}$$

Exercise 8 Exercise 10

Exercise 10

Chapter 8, section 8.3, page 521

Discrete Mathematics with Applications
ISBN: 9781337694193

Table of contents

Solutions

Verified

Solution A Solution B

$A = \{-5, -4, -3, -2, -1, 0, 1, 2, 3, 4, 5\}$.

$mRn \iff 3 \mid (m^2 - n^2)$

To find distinct equivalence classes.

$[-5] = \{m \in A : mR-5\}$

$= \{m \in A : 3 \mid 25 - m^2\}$

$= \{-5, -4, -2, -1, 1, 2, 4, 5\}$.

$[-3] = \{m \in A : mR(-3)\}$

$= \{m \in A : 3 \mid m^2 - 9\}$

$= \{-3, 0, 3\}$.

So, distinct equivalence classes are $\{-5, -4, -2, -1, 1, 2, 4, 5\}$ and $\{-3, 0, 3\}$.

Note: $[-5] = [-4] = [-2] = [-1] = [1] = [2] = [4] = [5]$ and $[-3] = [0] = [3]$. That is why, we need not consider other equivalence classes.

Exercise 9 Exercise 11

Exercise 10

Chapter 8, section 8.3, page 521

Discrete Mathematics with Applications
ISBN: 9781337694193

Table of contents

Solutions

Verified

Solution A Solution B

Step 1

1 of 4

DEFINITIONS

A **partition** of a set S is a collection of ***disjoint subsets*** whose union is equal to the set S.

The **equivalence class** of a is the set of all elements that are relation to a. Notation: $[a]_R$

Step 2

2 of 4

SOLUTION

$$A = \{-5, -4, -3, -2, -1, 0, 1, 2, 3, 4, 5\}$$
$$R = \{(a, b) \in A \times A \mid 3 | (a^2 - b^2)\}$$

Let us first determine which values are in the same equivalence class as -5. a is in the same equivalence class as -5, when $(-5, a) \in R$ and thus when $(-5)^2 - a^2 = 25 - a^2$ is divisible by 3 ($(-5)^2 - a^2 = 25 - a^2$ is a multiply of 3).

Element	$(-5)^2 - a^2 = 25 - a^2$	**In same equivalence class as -5**
-4	$25 - (-4)^2 = 25 - 16 = 9$	Yes
-3	$25 - (-3)^2 = 25 - 9 = 16$	No
-2	$25 - (-2)^2 = 25 - 4 = 21$	Yes
-1	$25 - (-1)^2 = 25 - 1 = 24$	Yes
0	$25 - 0^2 = 25 - 0 = 25$	No
1	$25 - 1^2 = 25 - 1 = 24$	Yes
2	$25 - 2^2 = 25 - 4 = 21$	Yes
3	$25 - 3^2 = 25 - 9 = 16$	No
4	$25 - 4^2 = 25 - 16 = 9$	Yes
5	$25 - 5^2 = 25 - 25 = 0$	Yes

Thus we then note that $-4, -2, -1, 1, 2, 4$ and 5 are in the same equivalence class as -5, thus the first equivalence class is then $\{-5, -4, -2, -1, 1, 2, 4, 5\}$.

Step 3

3 of 4

Let us next determine which values are in the same equivalence class as -3. All values in the previous equivalence class cannot be in the equivalence class of -3 (as -3 was not in that equivalence class) and thus we only need to check the remaining elements.

a is in the same equivalence class as -3, when $(-3, a) \in R$ and thus when $(-3)^2 - a^2 = 9 - a^2$ is divisible by 3 ($(-3)^2 - a^2 = 9 - a^2$ is a multiply of 3).

Element	$(-3)^2 - a^2 = 9 - a^2$	**In same equivalence class as -3**
0	$9 - 0^2 = 9 - 0 = 9$	Yes
3	$9 - 3^2 = 9 - 9 = 0$	Yes

Thus we then note that 0 and 3 are in the same equivalence class as -3, thus the second equivalence class is then $\{-3, 0, 3\}$.

The equivalence classes are then $\{-5, -4, -2, -1, 1, 2, 4, 5\}, \{-3, 0, 3\}$

Result

4 of 4

$$\{-5, -4, -2, -1, 1, 2, 4, 5\}, \{-3, 0, 3\}$$

Exercise 9 Exercise 11

Exercise 11

Chapter 8, section 8.3, page 521

Discrete Mathematics with Applications
ISBN: 9781337694193

Table of contents

Solution

Verified

Step 1

1 of 4

DEFINITIONS

A **partition** of a set S is a collection of ***disjoint subsets*** whose union is equal to the set S.

The **equivalence class** of a is the set of all elements that are relation to a. Notation: $[a]_R$

Step 2

2 of 4

SOLUTION

$$A = \{-4, -3, -2, -1, 0, 1, 2, 3, 4\}$$
$$R = \{(a, b) \in A \times A | \, 4|(a^2 - b^2)\}$$

Let us first determine which values are in the same equivalence class as -4. a is in the same equivalence class as -4, when $(-4, a) \in R$ and thus when $(-4)^2 - a^2 = 16 - a^2$ is divisible by 4 ($(-4)^2 - a^2 = 16 - a^2$ is a multiply of 4).

Element	$(-4)^2 - a^2 = 16 - a^2$	**In same equivalence class as -4**
-3	$16 - (-3)^2 = 16 - 9 = 7$	No
-2	$16 - (-2)^2 = 16 - 4 = 12$	Yes
-1	$16 - (-1)^2 = 16 - 1 = 15$	No
0	$16 - 0^2 = 16 - 0 = 16$	Yes
1	$16 - 1^2 = 16 - 1 = 15$	No
2	$16 - 2^2 = 16 - 4 = 12$	Yes
3	$16 - 3^2 = 16 - 9 = 7$	No
4	$16 - 4^2 = 16 - 16 = 0$	Yes

Thus we then note that $-2, 0, 2$ and 4 are in the same equivalence class as -4, thus the first equivalence class is then $\{-4, -2, 0, 2, 4\}$.

Step 3

3 of 4

Let us next determine which values are in the same equivalence class as -3. All values in the previous equivalence class cannot be in the equivalence class of -3 (as -3 was not in that equivalence class) and thus we only need to check the remaining elements.

a is in the same equivalence class as -3, when $(-3, a) \in R$ and thus when $(-3)^2 - a^2 = 9 - a^2$ is divisible by 3 ($(-3)^2 - a^2 = 9 - a^2$ is a multiply of 3).

Element	$(-3)^2 - a^2 = 9 - a^2$	**In same equivalence class as -3**
-1	$9 - (-1)^2 = 9 - 1 = 8$	Yes
1	$9 - 1^2 = 9 - 1 = 8$	Yes
3	$9 - 3^2 = 9 - 9 = 0$	Yes

Thus we then note that $-1, 1$ and 3 are in the same equivalence class as -3, thus the second equivalence class is then $\{-3, -1, 1, 3\}$.

The equivalence classes are then $\{-4, -2, 0, 2, 4\}, \{-3, -1, 1, 3\}$

Result

4 of 4

$$\{-4, -2, 0, 2, 4\}, \{-3, -1, 1, 3\}$$

Exercise 10 Exercise 12

Exercise 12

Chapter 8, section 8.3, page 521

Discrete Mathematics with Applications
ISBN: 9781337694193

Table of contents

Solution

Verified

Step 1

1 of 4

DEFINITIONS

A **partition** of a set S is a collection of ***disjoint subsets*** whose union is equal to the set S.

The **equivalence class** of a is the set of all elements that are relation to a. Notation: $[a]_R$

Step 2

2 of 4

SOLUTION

$$A = \{-4, -3, -2, -1, 0, 1, 2, 3, 4\}$$
$$R = \{(a, b) \in A \times A |\ 5|(a^2 - b^2)\}$$

Let us first determine which values are in the same equivalence class as -4. a is in the same equivalence class as -4, when $(-4, a) \in R$ and thus when $(-4)^2 - a^2 = 16 - a^2$ is divisible by 5 ($(-4)^2 - a^2 = 16 - a^2$ is a multiply of 5).

Element	$(-4)^2 - a^2 = 16 - a^2$	**In same equivalence class as -4**
-3	$16 - (-3)^2 = 16 - 9 = 7$	No
-2	$16 - (-2)^2 = 16 - 4 = 12$	No
-1	$16 - (-1)^2 = 16 - 1 = 15$	Yes
0	$16 - 0^2 = 16 - 0 = 16$	No
1	$16 - 1^2 = 16 - 1 = 15$	Yes
2	$16 - 2^2 = 16 - 4 = 12$	No
3	$16 - 3^2 = 16 - 9 = 7$	No
4	$16 - 4^2 = 16 - 16 = 0$	Yes

Thus we then note that $-1, 1$ and 4 are in the same equivalence class as -4, thus the first equivalence class is then $\{-4, -1, 1, 4\}$.

Step 3

3 of 4

Let us next determine which values are in the same equivalence class as -3. All values in the previous equivalence class cannot be in the equivalence class of -3 (as -3 was not in that equivalence class) and thus we only need to check the remaining elements.

a is in the same equivalence class as -3, when $(-3, a) \in R$ and thus when $(-3)^2 - a^2 = 9 - a^2$ is divisible by 5 ($(-3)^2 - a^2 = 9 - a^2$ is a multiple of 5).

Element	$(-2)^2 - a^2 = 4 - a^2$	**In same equivalence class as -3**
-2	$9 - (-2)^2 = 9 - 4 = 5$	Yes
0	$4 - 0^2 = 4 - 0 = 4$	No
2	$9 - 2^2 = 9 - 4 = 5$	Yes
3	$9 - 3^2 = 9 - 9 = 0$	Yes

Thus we then note that $-2, 2$ and 3 are in the same equivalence class as -3, thus the second equivalence class is then $\{-3, -2, 2, 3\}$.

The only element that is not in one of the previous equivalence classes is 0 and thus 0 forms its own equivalence class $\{0\}$.

The equivalence classes are then $\{-4, -1, 1, 4\}, \{-3, -2, 2, 3\}, \{0\}$.

Result

4 of 4

$$\{-4, -1, 1, 4\}, \{-3, -2, 2, 3\}, \{0\}$$

Exercise 11 Exercise 13

Exercise 13

Chapter 8, section 8.3, page 521

Discrete Mathematics with Applications
ISBN: 9781337694193

Table of contents

Solution

Verified

Step 1

1 of 4

DEFINITIONS

A **partition** of a set S is a collection of ***disjoint subsets*** whose union is equal to the set S.

The **equivalence class** of a is the set of all elements that are relation to a. Notation: $[a]_R$

Step 2

2 of 4

SOLUTION

$$\begin{aligned} A &= \text{Set of all strings of length 4 in } a\text{'s and } b\text{'s} \\ R &= \{(s,t) \in A \times A \mid s \text{ and } t \text{ have the same first two characters}\} \end{aligned}$$

Let us first determine all strings of length 4 in a's and b's:

$$\begin{aligned} A = \{&aaaa, aaab, aaba, aabb, \\ &abaa, abab, abba, abbb, \\ &baaa, bbab, bbba, bbbb, \\ &bbaa, bbab, bbba, bbbb\} \end{aligned}$$

Let us next group the ordered pairs in R that have at least one common element (with at least one of the other elements in the group).

$(s,t) \in R$ when s and t have the same first two characters.

$$\begin{aligned} \text{First group: } &(aaaa, aaaa), (aaaa, aaab), (aaaa, aaba), (aaaa, aabb), \\ &(aaab, aaaa), (aaab, aaab), (aaab, aaba), (aaab, aabb), \\ &(aaba, aaaa), (aaba, aaab), (aaba, aaba), (aaba, aabb), \\ &(aabb, aaaa), (aabb, aaab), (aabb, aaba), (aabb, aabb) \\ \text{Second group: } &(abaa, abaa), (abaa, abab), (abaa, abba), (abaa, abbb), \\ &(abab, abaa), (abab, abab), (abab, abba), (abab, abbb), \\ &(abba, abaa), (abba, abab), (abba, abba), (abba, abbb), \\ &(abbb, abaa), (abbb, abab), (abbb, abba), (abbb, abbb) \\ \text{Third group: } &(baaa, baaa), (baaa, baab), (baaa, baba), (baaa, babb), \\ &(baab, baaa), (baab, baab), (baab, baba), (baab, babb), \\ &(baba, baaa), (baba, baab), (baba, baba), (baba, babb), \\ &(babb, baaa), (babb, baab), (babb, baba), (babb, babb) \\ \text{Fourth group: } &(bbaa, bbaa), (bbaa, bbab), (bbaa, bbba), (bbaa, bbbb), \\ &(bbab, bbaa), (bbab, bbab), (bbab, bbba), (bbab, bbbb), \\ &(bbba, bbaa), (bbba, bbab), (bbba, bbba), (bbba, bbbb), \\ &(bbbb, bbaa), (bbbb, bbab), (bbbb, bbba), (bbbb, bbbb) \end{aligned}$$

Step 3

3 of 4

Each group then corresponds with an equivalence class, while the equivalence class is the set containing all elements mentioned in the ordered pairs of the group.

$$\begin{aligned} \text{Equivalence class first group: } &\{aaaa, aaab, aaba, aabb\} \\ \text{Equivalence class second group: } &\{abaa, abab, abba, abbb\} \\ \text{Equivalence class third group: } &\{baaa, baab, baba, babb\} \\ \text{Equivalence class fourth group: } &\{bbaa, bbab, bbba, bbbb\} \end{aligned}$$

Thus the equivalence classes are then

$$\{aaaa, aaab, aaba, aabb\}, \{abaa, abab, abba, abbb\}, \{baaa, baab, baba, babb\}, \{bbaa, bbab, bbba, bbbb\}$$

Result

4 of 4

$$\{aaaa, aaab, aaba, aabb\}, \{abaa, abab, abba, abbb\}, \{baaa, baab, baba, babb\}, \{bbaa, bbab, bbba, bbbb\}$$

Exercise 12 Exercise 14

Exercise 14

Chapter 8, section 8.3, page 521

Discrete Mathematics with Applications
ISBN: 9781337694193

Table of contents

Solution

Verified

Step 1

1 of 3

Solution:

First of all we will explicitly write the set A. Since the sum of the characters of the strings in A can be at most 2, it follows that there are three possible scenarios. The sum can be 0, 1 or 2.

First we observe the strings of length 4 and the sum of characters equal to 0. There is only one such string, whose all characters are 0, i.e. that is 0000.

Next we observe the strings of length 4 and the sum of characters equal to 1. There is just one possibility, that the string has one 1 and three zeros. Since the length has to be 4, we can "move" that 1 around and form the following four strings:

$$1000, 0100, 0010, 0001$$

Finally, the sum of characters can be 2 if we have two 1's and two 0's or if we have one 2 and three 0's. In the first case, we can rearrange those 1's and 0's like this:

$$1100, 1010, 1001, 0110, 0101, 0011$$

And if we have one 2 and three 0's, the strings are as follows:

$$2000, 0200, 0020, 0002$$

Now as we obtained the entire set $A = \{0000, 1000, 0100, 0010, 0001, 1100, 1010, 1001, 0110, 0101, 0011, 2000, 0200, 0020, 0002\}$, we observe the way the relation R is defined. In R we have all the pairs of strings from A so that the sums of characters in those two strings are equal.

In order to form the distinct equivalence classes of this relation, it is useful to separate the strings that have the sum of characters 0, 1 and 2 which we did in the procedure of forming the set A.

Since only the string 0000 has the sum of characters 0, it follows that the only pair in R which contains 0 is $(0, 0)$. This means that 0 is in relation only with itself, and so

$$\boxed{[0000] = \{0000\}}$$

Step 2

2 of 3

Now we observe all the strings which sum of elements equals 1. Those are the following strings:

$$1000, 0100, 0010, 0001$$

According to the definition of the relation R, we would have that $(1000, 1000), (1000, 0100), ..., (0100, 0100), (0100, 0010), ..., (0001, 0001) \in R$. In other words all the strings that have just one 1 and three 0's are in relation with one another and their equivalence classes will be the same set:

$$\boxed{[1000] = \{1000, 0100, 0010, 0001\}}$$

Finally, we observe all the strings with the sum of characters that equals 2. Those are the following strings:

$$1100, 1010, 1001, 0110, 0101, 0011, 2000, 0200, 0020, 0002$$

Every ordered pair of the strings from this list will be in R, because the sum is 2 in each of the strings. In other words the equivalence class of any of the strings on this list will consist of all the strings on the list. Therefore, the equivalence classes of all those elements is the same class and can be denoted as the class of any of the elements, but for convenience we will choose the first element that has a 2 in it, that is 2000:

$$\boxed{[2000] = \{1100, 1010, 1001, 0110, 0101, 0011, 2000, 0200, 0020, 0002\}}$$

The conclusion is that there are only three distinct equivalence classes:

$$[0000] = \{0000\}$$

$$[1000] = \{1000, 0100, 0010, 0001\}$$

$$[2000] = \{1100, 1010, 1001, 0110, 0101, 0011, 2000, 0200, 0020, 0002\}$$

Result

3 of 3

There are only three distinct equivalence classes of this relation R observed on the set A:

$$[0000] = \{0000\}$$

$$[1000] = \{1000, 0100, 0010, 0001\}$$

$$[2000] = \{1100, 1010, 1001, 0110, 0101, 0011, 2000, 0200, 0020, 0002\}$$

Exercise 13 Exercise 15

Exercise 15

Chapter 8, section 8.3, page 521

Discrete Mathematics with Applications
ISBN: 9781337694193

Table of contents

Solutions

Verified

Solution A Solution B

Step 1

1 of 6

DEFINITIONS

a **divides** b if there exists an integer c such that $b = ac$

Notation: $a|b$

a is **congruent to** b **modulo** m if m divides $a - b$

Notation: $a \equiv b \pmod{m}$

Step 2

2 of 6

SOLUTION

(a) $17 \equiv 2 \pmod{5}$ is true if and only if 5 divides $17 - 2$.

$$17 - 2 = 15 = 3 \cdot 5$$

By the definition of divides, 5 divides $17 - 2$ (since 3 is an integer) and thus $17 \equiv 2 \pmod{5}$ is **true**.

Step 3

3 of 6

(b) $4 \equiv -5 \pmod{7}$ is true if and only if 7 divides $4 - (-5)$.

$$4 - (-5) = 4 + 5 = 9$$

7 does not divide 9 and thus $4 \equiv -5 \pmod{7}$ is **false**.

Step 4

4 of 6

(c) $-2 \equiv -8 \pmod{3}$ is true if and only if 3 divides $-2 - (-8)$.

$$-2 - (-8) = -2 + 8 = 6 = 2 \cdot 3$$

By the definition of divides, 3 divides $-2 - (-8)$ (since 2 is an integer) and thus $-2 \equiv -8 \pmod{3}$ is **true**.

Step 5

5 of 6

(d) $-6 \equiv 22 \pmod{2}$ is true if and only if 2 divides $-6 - 22$.

$$-6 - 22 = -28 = 2 \cdot (-14)$$

By the definition of divides, 2 divides $-6 - 22$ (since -14 is an integer) and thus $-6 \equiv 22 \pmod{2}$ is **true**.

Result

6 of 6

(a) True

(b) False

(c) True

(d) True

Exercise 14 Exercise 16

Exercise 15

Chapter 8, section 8.3, page 521

Discrete Mathematics with Applications
ISBN: 9781337694193

Table of contents

Solutions Verified

Solution A **Solution B**

a) $17 \equiv 2 \pmod 5$

$17-2 = 15$ and $5 \mid 15$

$\Rightarrow 5 \mid (17-2) \Rightarrow 17 \equiv 2 \pmod 5$.

So, $17 \equiv 2 \pmod 5$ is true.

b) $4-(-5) = 9$ and

$7 \nmid 9$

$\Rightarrow 7 \nmid 4-(-5)$

$\Rightarrow 4 \equiv -5 \pmod 7$ is False.

c) $-2 \equiv -8 \pmod 3$

$-2-(-8) = -2+8 = 6$ and

$3 \mid 6$

$\Rightarrow 3 \mid (-2)-(-8)$

$\Rightarrow -2 \equiv -8 \pmod 3$ is True.

d) $-6 \equiv 22 \pmod 2$

$-6-22 = -28$ and $2 \mid -28$

$\Rightarrow 2 \mid -6-22$

$\Rightarrow -6 \equiv -22 \pmod 2$ is True.

$a \equiv b \bmod(n)$ if and only if $n \mid (a-b)$. So, just check the definition, whether it is satisfied or not.

Exercise 14 Exercise 16

Exercise 16

Chapter 8, section 8.3, page 521

Discrete Mathematics with Applications
ISBN: 9781337694193
Table of contents

Solution Verified

Step 1

1 of 6

DEFINITIONS

a **divides** b if there exists an integer c such that $b = ac$

Notation: $a|b$

a is **congruent to** b **modulo** m if m divides $a - b$

Notation: $a \equiv b \pmod{m}$

Step 2

2 of 6

SOLUTION

(a)

$$R = \text{Relation of congruence modulo } 3$$

Let us first determine which equivalence classes are equal to the equivalence class of 7. The equivalence class of a is equal to the equivalence class of 7 if and only if $a \equiv 7 \mod 3$ if and only if 3 divides $a - 7$.

Equivalence class	$a - 7$	3 divides $a - 7$	Equal to equivalence class $[7]$
$[-4]$	$-4 - 7 = -11$	No	No
$[-6]$	$-6 - 7 = -13$	No	No
$[17]$	$17 - 7 = 10$	No	No
$[4]$	$4 - 7 = -3$	Yes	Yes
$[27]$	$27 - 7 = 20$	No	No
$[19]$	$19 - 7 = 12$	Yes	Yes

This then implies: $[7] = [4] = [19]$.

Next determine which equivalence classes are equal to the equivalence class of -4. The equivalence class of a is equal to the equivalence class of -4 if and only if $a \equiv -4 \mod 3$ if and only if 3 divides $a - (-4)$. Note: You only need to check the remaining equivalence classes that were unequal to the equivalence class $[7]$.

Equivalence class	$a - (-4)$	3 divides $a - (-4)$	Equal to equivalence class $[-4]$
$[-6]$	$-6 - (-4) = -2$	No	No
$[17]$	$17 - (-4) = 21$	Yes	Yes
$[27]$	$27 - (-4) = 31$	No	No

This then implies: $[-4] = [17]$.

Step 3

3 of 6

Finally, determine which equivalence classes are equal to the equivalence class of -6. The equivalence class of a is equal to the equivalence class of -6 if and only if $a \equiv -6 \mod 3$ if and only if 3 divides $a - (-6)$. Note: You only need to check the remaining equivalence classes that were unequal to the equivalence class $[7]$ and $[-4]$.

Equivalence class	$a - (-6)$	3 divides $a - (-6)$	Equal to equivalence class $[-6]$
$[27]$	$27 - (-6) = 33$	Yes	Yes

This then implies: $[-6] = [27]$.

Step 4

4 of 6

(b)

$$R = \text{Relation of congruence modulo } 7$$

Let us first determine which equivalence classes are equal to the equivalence class of 35. The equivalence class of a is equal to the equivalence class of 35 if and only if $a \equiv 35 \mod 7$ if and only if 7 divides $a - 35$.

Equivalence class	$a - 35$	7 divides $a - 35$	Equal to equivalence class $[35]$
$[3]$	$3 - 35 = -32$	No	No
$[-7]$	$-7 - 35 = -42$	Yes	Yes
$[12]$	$12 - 35 = -23$	No	No
$[0]$	$0 - 35 = -35$	Yes	Yes
$[-2]$	$-2 - 35 = -37$	No	No
$[17]$	$17 - 35 = -18$	No	No

This then implies: $[35] = [-7] = [0]$.

Next determine which equivalence classes are equal to the equivalence class of 3. The equivalence class of a is equal to the equivalence class of 3 if and only if $a \equiv 3 \mod 7$ if and only if 7 divides $a - 3$. Note: You only need to check the remaining equivalence classes that were unequal to the equivalence class $[35]$.

Equivalence class	$a - 3$	7 divides $a - 3$	Equal to equivalence class $[3]$
$[12]$	$12 - 3 = 9$	No	No
$[-2]$	$-2 - 3 = -5$	No	No
$[17]$	$17 - 3 = -14$	Yes	Yes

This then implies: $[3] = [17]$.

Step 5

5 of 6

Finally, determine which equivalence classes are equal to the equivalence class of 12. The equivalence class of a is equal to the equivalence class of 12 if and only if $a \equiv 12 \mod 7$ if and only if 7 divides $a - 12$. Note: You only need to check the remaining equivalence classes that were unequal to the equivalence class $[35]$ and $[3]$.

Equivalence class	$a - 12$	3 divides $a - 12$	Equal to equivalence class $[12]$
$[-2]$	$-2 - 12 = -14$	Yes	Yes

This then implies: $[12] = [-2]$.

Result

6 of 6

(a)

$$[7] = [4] = [19]$$

$$[-4] = [17]$$

$$[-6] = [27]$$

(b)

$$[35] = [-7] = [0]$$

$$[3] = [17]$$

$$[12] = [-2]$$

Exercise 17

Chapter 8, section 8.3, page 521

Discrete Mathematics with Applications
ISBN: 9781337694193

Table of contents

Solution

Verified

Step 1

1 of 6

DEFINITIONS

a **divides** b if there exists an integer c such that $b = ac$

Notation: $a|b$

Division algorithm Let a be an integer and d a positive integer. Then there are unique integers q and r with $0 \leq r < d$ such that $a = dq + r$.

q is called the **quotient** and r is called the **remainder**

$$q = a \ div \ d$$

$$r = a \ mod \ d$$

a is **congruent to** b **modulo** m if m divides $a - b$

Notation: $a \equiv b \pmod{m}$

Step 2

2 of 6

SOLUTION

(a) To proof: For all integers m and n, $m \equiv n \pmod{3}$ if and only if $m \ mod \ 3 = n \ mod \ 3$.

PROOF

Let m and n be integers.

First case $\Rightarrow$

Let us assume $m \equiv n \pmod{3}$. By the definition of b being congruent to n modulo 3:

$$3|(m - n)$$

By the definition of divides, there exists an integer k such that:

$$m - n = 3k$$

Add n to each side:

$$m = n + 3k$$

Take modulo 3 of each side of the previous equation:

$$m \ mod \ 3 = (n + 3k) \ mod \ 3$$

We can simplify the right side, since $(3k) \ mod \ 3 = 0$

$$m \ mod \ 3 = n \ mod \ 3$$

Step 3

3 of 6

Second case $\Leftarrow$

Let us assume $a = m \ mod \ 3 = n \ mod \ 3$.

By the definition of $m \ mod \ 3$, there exists some integer k such that:

$$m = 3k + a$$

By the definition of $n \ mod \ 3$, there exists some integer l such that:

$$n = 3l + a$$

Solve the previous two equations to a:

$$a = m - 3k$$

$$a = n - 3l$$

The two expressions for a need to be equal:

$$m - 3k = n - 3l$$

Add $3k$ to each side:

$$m = n - 3l + 3k$$

Subtract n from each side:

$$m - n = 3k - 3l$$

Use the distributive property:

$$m - n = 3(k - l)$$

Since k and l are integers, their difference $k - l$ is also an integer. By the definition of divides, 3 divides $m - n$ and thus $m \equiv n \pmod{3}$.

Conclusion Combining the result of the first and second part, we have then shown that $m \equiv n \pmod{3}$ if and only if $m \ mod \ 3 = n \ mod \ 3$.

$\square$

Step 4

4 of 6

(b) To proof: For all integers m and n, for all positive integers d, $m \equiv n \pmod{d}$ if and only if $m \ mod \ d = n \ mod \ d$.

PROOF

Let m and n be integers.

Let d be a positive integer.

First case $\Rightarrow$

Let us assume $m \equiv n \pmod{d}$. By the definition of b being congruent to n modulo d:

$$d|(m - n)$$

By the definition of divides, there exists an integer k such that:

$$m - n = dk$$

Add n to each side:

$$m = n + dk$$

Take modulo d of each side of the previous equation:

$$m \ mod \ d = (n + dk) \ mod \ d$$

We can simplify the right side, since $(dk) \ mod \ d = 0$

$$m \ mod \ d = n \ mod \ d$$

Step 5

5 of 6

Second case $\Leftarrow$

Let us assume $a = m \ mod \ d = n \ mod \ d$.

By the definition of $m \ mod \ d$, there exists some integer k such that:

$$m = dk + a$$

By the definition of $n \ mod \ d$, there exists some integer l such that:

$$n = dl + a$$

Solve the previous two equations to a:

$$a = m - dk$$

$$a = n - dl$$

The two expressions for a need to be equal:

$$m - dk = n - dl$$

Add dk to each side:

$$m = n - dl + dk$$

Subtract n from each side:

$$m - n = dk - dl$$

Use the distributive property:

$$m - n = d(k - l)$$

Since k and l are integers, their difference $k - l$ is also an integer. By the definition of divides, d divides $m - n$ and thus $m \equiv n \pmod{d}$.

Conclusion Combining the result of the first and second part, we have then shown that $m \equiv n \pmod{d}$ if and only if $m \ mod \ d = n \ mod \ d$.

$\square$

Result

6 of 6

(a) Proof that $m \equiv n \pmod{3}$ if and only if $m \ mod \ 3 = n \ mod \ 3$ by proving that $m \ mod \ 3 = n \ mod \ 3$ when $m \equiv n \pmod{3}$ and $m \equiv n \pmod{3}$ when $m \ mod \ 3 = n \ mod \ 3$.

(b) Proof that $m \equiv n \pmod{d}$ if and only if $m \ mod \ d = n \ mod \ d$ by proving that $m \ mod \ d = n \ mod \ d$ when $m \equiv n \pmod{d}$ and $m \equiv n \pmod{d}$ when $m \ mod \ d = n \ mod \ d$.

Exercise 16 Exercise 18

Exercise 18

Chapter 8, section 8.3, page 521

Discrete Mathematics with Applications
ISBN: 9781337694193

Table of contents

Solution

Verified

Step 1

1 of 4

DEFINITIONS

Two sets are **disjoint** when their intersection is the empty set.

Two sets are **distinct** when at least one of the set contains an element that is not contained in the other set.

Step 2

2 of 4

SOLUTION

(a) For example, let us consider the sets $A_1 = \{1, 2\}$ and the set $A_2 = \{2\}$

A_1 and A_2 are **not disjoint**, because the two sets have the element 2 in common.

$$A_1 \cap A_2 = \{2\}$$

A_1 and A_2 are **distinct**, because A_1 contains the element 1, but A_2 does not contain the element 2.

Step 3

3 of 4

(b) For example, let us consider the sets $A_1 = \{x, y\}$ and the set $A_2 = \{y, z\}$

We note that the set A_1 contains x and y, but does not contain z.

We note that the set A_2 contains y and z, but does not contain x.

Moreover, we note that neither set contains both x and z.

Result

4 of 4

Answers could vary

(a) For example: $A_1 = \{1, 2\}$ and $A_2 = \{2\}$

(b) For example: $A_1 = \{x, y\}$ and $A_2 = \{y, z\}$

Exercise 17 Exercise 19

Exercise 19

Chapter 8, section 8.3, page 521

Discrete Mathematics with Applications
ISBN: 9781337694193

Table of contents

Solution

Verified

Step 1

1 of 8

DEFINITIONS

A relation R on a set A is **reflexive** if $(a, a) \in R$ for every element $a \in A$.

A relation R on a set A is **symmetric** if $(b, a) \in R$ whenever $(a, b) \in R$

A relation R on a set A is **transitive** if $(a, b) \in R$ and $(b, c) \in R$ implies $(a, c) \in R$

A relation R is an **equivalence relation** if the relation R is transitive, symmetric and reflexive.

The **equivalence class** of a is the set of all elements that are relation to a. Notation: $[a]_R$

Step 2

2 of 8

SOLUTION

(a)

$$A = \text{set of all students at your college}$$
$$R = \{(x, y) \in A \times A | x \text{ has the same major as } y\}$$

(1) To proof: R is an equivalence relation

PROOF

Reflexive

Since an individual always has the same major as itself, $(x, x) \in R$ for all $x \in A$ and thus R is indeed reflexive.

Symmetric

Let us assume that $(x, y) \in R$.

By the definition of R: x and y have the same major.

But then y and x also have the same major:

$$(y, x) \in R$$

Since $(x, y) \in R$ implies $(y, x) \in R$, R is symmetric.

Transitive

Let us assume that $(x, y) \in R$ and $(y, z) \in R$.

By the definition of R:

$$x \text{ and } y \text{ have the same major}$$
$$y \text{ and } z \text{ have the same major}$$

But then x and z also have the same major:

$$(x, z) \in R$$

Since $(x, y) \in R$ and $(y, z) \in R$ implies $(x, z) \in R$, R is transitive.

Step 3

3 of 8

Equivalence relation

Since R is reflexive, symmetric and transitive, R is also an equivalence relation.

$\square$

Step 4

4 of 8

(2) Each equivalence class will contain students who have the same major or students who have the same double major.

Thus there is an equivalence class per major and per double major.

Step 5

5 of 8

(b)

$$A = \text{set of all students at your college}$$
$$R = \{(x, y) \in A \times A | x \text{ has the same age as } y\}$$

(1) To proof: R is an equivalence relation

PROOF

Reflexive

Since an individual always has the same age as itself, $(x, x) \in R$ for all $x \in A$ and thus R is indeed reflexive.

Symmetric

Let us assume that $(x, y) \in R$.

By the definition of R: x and y have the same age.

But then y and x also have the same age:

$$(y, x) \in R$$

Since $(x, y) \in R$ implies $(y, x) \in R$, R is symmetric.

Transitive

Let us assume that $(x, y) \in R$ and $(y, z) \in R$.

By the definition of R:

$$x \text{ and } y \text{ have the same age}$$
$$y \text{ and } z \text{ have the same age}$$

But then x and z also have the same age:

$$(x, z) \in R$$

Since $(x, y) \in R$ and $(y, z) \in R$ implies $(x, z) \in R$, R is transitive.

Step 6

6 of 8

Equivalence relation

Since R is reflexive, symmetric and transitive, R is also an equivalence relation.

$\square$

Step 7

7 of 8

(2) Each equivalence class will contain students who have the same age.

Thus there is an equivalence class per age.

Result

8 of 8

(a)

(1) Show that R is an equivalence relation by showing that R is reflexive, symmetric and transitive.

(2) Each major or double major has its own equivalence class, which contains all students with that major or double major.

(b)

(1) Show that R is an equivalence relation by showing that R is reflexive, symmetric and transitive.

(2) Each age has its own equivalence class, which contains all students with that age.

Exercise 18 Exercise 20

Exercise 20

Chapter 8, section 8.3, page 521

Discrete Mathematics with Applications
ISBN: 9781337694193
Table of contents

Solution

Verified

Step 1

1 of 5

DEFINITIONS

a **divides** b if there exists an integer c such that $b = ac$

Notation: $a|b$

A relation R on a set A is **reflexive** if $(a, a) \in R$ for every element $a \in A$.

A relation R on a set A is **symmetric** if $(b, a) \in R$ whenever $(a, b) \in R$

A relation R on a set A is **transitive** if $(a, b) \in R$ and $(b, c) \in R$ implies $(a, c) \in R$

A relation R is an **equivalence relation** if the relation R is transitive, symmetric and reflexive.

The **equivalence class** of a is the set of all elements that are relation to a. Notation: $[a]_R$

Step 2

2 of 5

SOLUTION

$$A = \mathbf{Z}$$
$$E = \{(m, n) \in A \times A |\, 2|(m - n)\}$$

(1) To proof: E is an equivalence relation

PROOF

Reflexive

Let $x \in A = \mathbf{Z}$

$$x - x = 0 = 0 \cdot 2$$

By the definition of divides, 2 divides $x - x$ and thus $(x, x) \in E$

Since $(x, x) \in E$ for all $x \in A$ and thus E is indeed reflexive.

Symmetric

Let us assume that $(x, y) \in E$. By the definition of E:

$$2|(x - y)$$

By the definition of divides, there exists an integer k such that:

$$x - y = 2k$$

Multiply each side by -1:

$$-(x - y) = -(2k)$$

Use the distributive property:

$$y - x = 2(-k)$$

By the definition of divides, 2 divides $y - x$ as $-k$ is an integer (because k is an integer).

$$(y, x) \in E$$

Since $(x, y) \in E$ implies $(y, x) \in E$, E is symmetric.

Step 3

3 of 5

Transitive

Let us assume that $(x, y) \in E$ and $(y, z) \in E$.

By the definition of E:

$$2|(x - y)$$
$$2|(y - z)$$

By the definition of divides, there exist integers k and l such that:

$$x - y = 2k$$
$$y - z = 2l$$

Add the previous two equations:

$$(x - y) + (y - z) = 2k + 2l$$

Combine like terms:

$$x - z = 2k + 2l$$

Use distributive property:

$$x - z = 2(k + l)$$

By the definition of divides, 2 divides $x - z$ as $k + l$ is an integer (because k is an integer and l is an integer).

$$(x, z) \in E$$

Since $(x, y) \in E$ and $(y, z) \in E$ implies $(x, z) \in E$, E is transitive.

Equivalence relation

Since E is reflexive, symmetric and transitive, E is also an equivalence relation.

$\square$

Step 4

4 of 5

(2) If m and n are both even, then their difference $m - n$ is also even and thus 2 divides $m - n$ This then means that m and n are in the same equivalence class if they are both even.

$$\text{First equivalence class} = \text{Set of all even integers}$$

If m and n are both odd, then their difference $m - n$ is even and thus 2 divides $m - n$ This then means that m and n are in the same equivalence class if they are both odd.

$$\text{Second equivalence class} = \text{Set of all odd integers}$$

Note that if m is even and n odd (or m odd and n even), then their difference $m - n$ is odd and thus 2 does not divide $m - n$, which means that the set of all odd integers and the set of all even integers are not the same equivalence class.

Result

5 of 5

(1) Show that E is an equivalence relation by showing that E is reflexive, symmetric and transitive.

(2) Equivalence classes are the set of all even integers and the set of all odd integers.

Exercise 19 Exercise 21

Exercise 21

Chapter 8, section 8.3, page 521

Discrete Mathematics with Applications
ISBN: 9781337694193
Table of contents

Solution

Verified

Step 1

1 of 5

Solution:

The observed relation R is defined on the set $\mathbb{Z}$, i.e. $R \subseteq \mathbb{Z} \times \mathbb{Z}$. It is defined as follows:

$$\forall m, n \in \mathbb{Z} \;\; mRn \iff 7m - 5n \text{ is even}$$

a) To prove that the relation R is the equivalence relation, we have to prove that it is reflexive, symmetric and transitive.

$\boxed{1)}$ Reflexivity of a relation R means that for every element $n \in \mathbb{Z}$, over which the relation is defined, it holds that nRn. In our case, it would mean that for every integer n if holds that $7n - 5n$ is even. We can also observe this expression to be divisible by 2, its equivalent. Since

$$7n - 5n = 2n$$

it is obvious that $2n$ is even (divisible by 2 since it has 2 as its factor). The observed integer was chosen at random, therefore, this holds for any other $m \in \mathbb{Z}$ and so, the relation R is reflexive.

Before we get to the symmetric property of the observed relation, we will prove one result which would be very useful in our work.

Step 2

2 of 5

Theorem: The expression $7m - 5n$ is even if and only if both m and n are even or if both of them are odd.
[*In other words, the only way for $7m - 5n$ to be odd is when m and n have different parity.*]
Proof: We will divide the proof into two implications (which create this equivalence).
1) $7m - 5n$ is even $\implies$ m and n have the same parity
We will show that this implication is true using the counter position law:
$(p \implies q) \iff (\sim q \implies \sim p)$
We start by assuming that the conclusion "m and n have the same parity" is wrong. Hence, m and n have the different parity. Let $m = 2k$ and $n = 2l+1$. Now we include this into the observed expression and see what happens:

$$7m - 5n = 7 \cdot 2k - 5 \cdot (2l + 1) = 14k - 10l - 5 = \underbrace{2 \cdot (7k - 5l)}_{\text{even}} - \underbrace{5}_{\text{odd}}$$

As we already know, the difference of an even and odd integer is odd, hence $7m - 5n$ is odd, which means that $\sim p$ is true. This completes our proof, since the implication $\sim q \implies \sim p$ is true, so is the original one.

2) m and n have the same parity $\implies$ $7m - 5n$ is even
This implication we will observe directly. Since the hypothesis can be true in two situations, we observe each one individually:
2.1) m and n are both even $\implies$ $m = 2k$ and $n = 2l$ for some integers $k, l \in \mathbb{Z}$. Now we have that the expression

$$7m - 5n = 7 \cdot 2k - 5 \cdot 2l = 2 \cdot (7k - 5l)$$

is obviously even (since it has 2 as a factor). This proves the implication 2) in this case.

2. 2) m and n are both odd $\implies$ $m = 2k + 1$ and $n = 2l + 1$ for some integers $k, l \in \mathbb{Z}$. Now we have that the expression

$$7m - 5n = 7 \cdot (2k + 1) - 5 \cdot (2l + 1) = 14k + 7 - 10l - 5 = 2 \cdot (7k - 5l + 1)$$

is obviously even (since it has 2 as a factor). This proves the implication 2) in this case.
Since in both cases we have that the implication holds, we finished the entire proof. When we put 1) and 2) together, we have that the theorem is proven.

Step 3

3 of 5

$\boxed{2)}$ Relation R (defined on A) is symmetric if for every two elements $a, b \in A$ it holds that

$$aRb \implies bRa$$

In this exercise, symmetric property would mean that for every two integers $m, n \in \mathbb{Z}$ it holds that if $7m - 5n$ is even, then so is $7n - 5m$.

Let's assume that $7m - 5n$ is even. Using the previously proved theorem we have that m and n have the same parity. Since the theorem works in both directions, we have that $7n - 5m$ is also even. Therefore, out relation R is symmetric.

$\boxed{3)}$ The transitivity property of a relation R defined on A means that for any three elements $a, b, c \in A$ the following implication is true:

$$aRb \wedge bRc \implies aRc$$

Here, this translates to: for every three integers m, n and p we have that if $7m - 5n$ is even and $7n - 5p$ is even, then $7m - 5p$ is also even.

-The fact that mRn or that $7m - 5n$ is even gives us that m and n have the same parity (according to the previous theorem);

-The fact that nRp or that $7n - 5p$ is even gives us that n and p have the same parity (according to the previous theorem).

Therefore, all three m, n and p have the same parity. IF we only observe m and p, we have that the fact that those two have the same parity implies that $7m - 5p$ is even, which was needed to be shown. The conclusion is that the observed relation R is transitive.

Once we put all 1), 2) and 3) together, we have that R is the equivalence relation which completes the first part of the task.

Step 4

4 of 5

As we proved in the theorem, the condition that defines the relation R can be substituted with the following condition:

$$\forall m, n \in \mathbb{Z} \;\; mRn \iff m \text{ and } n \text{ have the same parity}$$

Since all integers can have just one of the two parities **ODD or EVEN**, this relation of equivalence will have just two distinct classes; the class of all even integers $\{2k | k \in \mathbb{Z}\}$ and the class of odd integers $\{2l + 1 | l \in \mathbb{Z}\}$.

Result

5 of 5

1. The relation R is in fact the equivalence relation. We used the additional result to prove symmetric and transitive property of R.
2. There are only two distinct equivalence classes $\{2k | k \in \mathbb{Z}\}$ and $\{2l + 1 | l \in \mathbb{Z}\}$.

See above for the detailed explanation along with the proof of the auxiliary result.

Exercise 20 Exercise 22

Exercise 22

Chapter 8, section 8.3, page 522

Discrete Mathematics with Applications
ISBN: 9781337694193

Table of contents

Solutions

Verified

Solution A Solution B

Step 1

1 of 5

DEFINITIONS

a **divides** b if there exists an integer c such that $b = ac$

Notation: $a|b$

a is **congruent to** b **modulo** m if m divides $a - b$

Notation: $a \equiv b \pmod{m}$

A relation R on a set A is **reflexive** if $(a, a) \in R$ for every element $a \in A$.

A relation R on a set A is **symmetric** if $(b, a) \in R$ whenever $(a, b) \in R$

A relation R on a set A is **transitive** if $(a, b) \in R$ and $(b, c) \in R$ implies $(a, c) \in R$

A relation R is an **equivalence relation** if the relation R is transitive, symmetric and reflexive.

The **equivalence class** of a is the set of all elements that are relation to a. Notation: $[a]_R$

Step 2

2 of 5

SOLUTION

$$A = \text{Set of all statement forms using the variables } p, q \text{ and } r$$
$$\mathbf{R} = \{(P, Q) \in A \times A |\ P \text{ and } Q \text{ have the same truth table}\}$$

(1) To proof: $\mathbf{R}$ is an equivalence relation

PROOF

Reflexive

Let $x \in A$

Since a statement is always logically equivalent with itself, a statement always has the same truth table as itself and thus $(x, x) \in \mathbf{R}$

Since $(x, x) \in \mathbf{R}$ for all $x \in A$ and thus $\mathbf{R}$ is indeed reflexive.

Symmetric

Let us assume that $(x, y) \in \mathbf{R}$. By the definition of $\mathbf{R}$:

$$x \text{ and } y \text{ have the same truth table}$$

However, if x and y have the same truth table, then y and x also have the same truth table.

$$(y, x) \in \mathbf{R}$$

Since $(x, y) \in \mathbf{R}$ implies $(y, x) \in \mathbf{R}$, $\mathbf{R}$ is symmetric.

Transitive

Let us assume that $(x, y) \in \mathbf{R}$ and $(y, z) \in \mathbf{R}$.

By the definition of $\mathbf{R}$:

$$x \text{ and } y \text{ have the same truth table}$$

$$y \text{ and } z \text{ have the same truth table}$$

However, this then implies that x, y and z all have the same truth table and thus x and z have the same truth table as well.

$$(x, z) \in \mathbf{R}$$

Since $(x, y) \in \mathbf{R}$ and $(y, z) \in \mathbf{R}$ implies $(x, z) \in \mathbf{R}$, $\mathbf{R}$ is transitive.

Step 3

3 of 5

Equivalence relation

Since $\mathbf{R}$ is reflexive, symmetric and transitive, $\mathbf{R}$ is also an equivalence relation.

$\square$

Step 4

4 of 5

(2) Two statement forms are related if they have the same truth table and thus if they are logically equivalent.

Each equivalence class then contains all logically equivalent statements.

Result

5 of 5

(1) Show that $\mathbf{R}$ is an equivalence relation by showing that $\mathbf{R}$ is reflexive, symmetric and transitive.

(2) Each equivalence class contains all logically equivalent statements.

Exercise 21 Exercise 23

Exercise 22

Chapter 8, section 8.3, page 522

Discrete Mathematics with Applications
ISBN: 9781337694193
Table of contents

Solutions

Verified

Solution A Solution B

Step 1

1 of 2

A - Set of all statement forms in three variables p, q, r. R is a relation on A.

For all p and q in A,

$pRq \Leftrightarrow$ p and q have same truth table.

Now, for all $p, q, s \in A$.

p has same truth table as itself. Hence pRp

So, R is reflexive.

Suppose, pRq. Then,

p and q have same truth table, which means q and p have same truth table.

Hence qRp. $\Rightarrow$ R is symmetric.

Suppose pRq, qRs.

$\Rightarrow$ p and q have same truth table.

q and s have same truth table.

$\Rightarrow$ p and s have truth table identical to that of q.

$\Rightarrow$ p and s have same truth table.

$\Rightarrow$ pRs $\Rightarrow$ R is transitive.

So, R being reflexive, symmetric and transitive is an equivalence relation on A.

Step 2

2 of 2

Each distinct equivalence class consists of all the equivalent statement patterns in A.

Exercise 21 Exercise 23

Exercise 23

Chapter 8, section 8.3, page 522

Discrete Mathematics with Applications
ISBN: 9781337694193
Table of contents

Solutions

Verified

Solution A Solution B

Step 1

1 of 5

DEFINITIONS

A relation R on a set A is **reflexive** if $(a, a) \in R$ for every element $a \in A$.

A relation R on a set A is **symmetric** if $(b, a) \in R$ whenever $(a, b) \in R$

A relation R on a set A is **transitive** if $(a, b) \in R$ and $(b, c) \in R$ implies $(a, c) \in R$

A relation R is an **equivalence relation** if the relation R is transitive, symmetric and reflexive.

The **equivalence class** of a is the set of all elements that are relation to a. Notation: $[a]_R$

Step 2

2 of 5

SOLUTION

$$P = \text{Set of all parts shipped to a company by multiple suppliers}$$
$$S = \{(x, y) \in P \times P |\ x \text{ has the same part number and supplier as } y\}$$

(1) To proof: S is an equivalence relation

PROOF

Reflexive

Let $x \in P$

Since part x always has the same part number and supplier than itself, $(x, x) \in S$.

Since $(x, x) \in S$ for all $x \in P$, S is indeed reflexive.

Symmetric

Let us assume that $(x, y) \in S$. By the definition of S:

$$x \text{ and } y \text{ have the same part number and supplier}$$

However, if x and y have the same part number and supplier, then y and x also have the same part number and supplier.

$$(y, x) \in S$$

Since $(x, y) \in S$ implies $(y, x) \in S$, S is symmetric.

Transitive

Let us assume that $(x, y) \in S$ and $(y, z) \in S$.

By the definition of S:

$$x \text{ and } y \text{ have the same part number and supplier}$$

$$y \text{ and } z \text{ have the same part number and supplier}$$

However, this then implies that x, y and z all have the same part number and supplier, thus x and z have the same part number and supplier.

$$(x, z) \in S$$

Since $(x, y) \in S$ and $(y, z) \in S$ implies $(x, z) \in S$, S is transitive.

Step 3

3 of 5

Equivalence relation

Since S is reflexive, symmetric and transitive, S is also an equivalence relation.

$\square$

Step 4

4 of 5

(2) Two parts are related if they have the same part number and supplier.

Each equivalence class then contains all parts that have the same part number and supplier.

Result

5 of 5

(1) Show that S is an equivalence relation by showing that S is reflexive, symmetric and transitive.

(2) Each equivalence class contains all parts that have the same part number and supplier.

Exercise 22 Exercise 24

Exercise 23

Chapter 8, section 8.3, page 522

Discrete Mathematics with Applications
ISBN: 9781337694193
Table of contents

Solutions

Verified

Solution A Solution B

Step 1

1 of 2

P - Set of parts shipped to a company from various suppliers. S is a relation on P.

$xSy \Leftrightarrow$ x has same part number ~~as~~ and is shipped from the same supplier as y.

Clearly, x has same part number and is shipped from the same supplier as itself. Hence xSx. So, S is reflexive.

Suppose xSy. $(x, y \in P)$

$\Rightarrow$ x has same part number and is shipped from the same supplier as y.

This means, y has the same part number as x, and is shipped from the same supplier as x. Hence ySx. So S is symmetric.

Suppose xSy, ySz $(x, y, z \in P)$. Then, x has same part number as y. shipped from the same supplier as y. Also, y has same part number and is shipped from the same supplier as z. So, it means, x and z both have same part number and are shipped from the same supplier as y. Therefore, xSz. $\Rightarrow$ S is reflexive.

Being reflexive, transitive and symmetric, S is an equivalence relation on P.

Step 2

2 of 2

The distinct equivalence classes consist of the parts with same part number and same supplier from where they are shipped.

Exercise 22 Exercise 24

Exercise 24

Chapter 8, section 8.3, page 522

Discrete Mathematics with Applications
ISBN: 9781337694193

Table of contents

Solution

Verified

Step 1

1 of 5

DEFINITIONS

A relation R on a set A is **reflexive** if $(a, a) \in R$ for every element $a \in A$.

A relation R on a set A is **symmetric** if $(b, a) \in R$ whenever $(a, b) \in R$

A relation R on a set A is **transitive** if $(a, b) \in R$ and $(b, c) \in R$ implies $(a, c) \in R$

A relation R is an **equivalence relation** if the relation R is transitive, symmetric and reflexive.

The **equivalence class** of a is the set of all elements that are relation to a. Notation: $[a]_R$

Step 2

2 of 5

SOLUTION

$$A = \text{Set of identifiers in a computer program}$$
$$R = \{(x, y) \in A \times A |\ x \text{ and } y \text{ are stored in the same memory location}\}$$

(1) To proof: R is an equivalence relation

PROOF

Reflexive

Let $x \in A$

Since identifier x is always stored in the same memory location as itself, $(x, x) \in R$.

Since $(x, x) \in R$ for all $x \in A$, R is indeed reflexive.

Symmetric

Let us assume that $(x, y) \in R$. By the definition of R:

$$x \text{ and } y \text{ are stored in the same memory location}$$

However, if x and y are stored in the same memory location, then y and x are also stored in the same memory location.

$$(y, x) \in R$$

Since $(x, y) \in R$ implies $(y, x) \in R$, R is symmetric.

Transitive

Let us assume that $(x, y) \in R$ and $(y, z) \in R$.

By the definition of R:

$$x \text{ and } y \text{ are stored in the same memory location}$$
$$y \text{ and } z \text{ are stored in the same memory location}$$

However, this then implies that x, y and z are all stored in the same memory location, thus x and z are stored in the same memory location.

$$(x, z) \in R$$

Since $(x, y) \in R$ and $(y, z) \in R$ implies $(x, z) \in R$, R is transitive.

Step 3

3 of 5

Equivalence relation

Since R is reflexive, symmetric and transitive, R is also an equivalence relation.

$\square$

Step 4

4 of 5

(2) Two identifiers are related if they are stored in the same memory location during the execution of the program.

Each equivalence class then contains all identifiers that are stored in the same memory location during the execution of the program.

Result

5 of 5

(1) Show that R is an equivalence relation by showing that R is reflexive, symmetric and transitive.

(2) Each equivalence class contains all identifiers that are stored in the same memory location during the execution of the program.

Exercise 23 Exercise 25

Exercise 25

Chapter 8, section 8.3, page 522

Discrete Mathematics with Applications
ISBN: 9781337694193

Table of contents

Solutions

Verified

Solution A Solution B

Step 1

1 of 5

DEFINITIONS

A relation R on a set A is **reflexive** if $(a, a) \in R$ for every element $a \in A$.

A relation R on a set A is **symmetric** if $(b, a) \in R$ whenever $(a, b) \in R$.

A relation R on a set A is **transitive** if $(a, b) \in R$ and $(b, c) \in R$ implies $(a, c) \in R$

A relation R is an **equivalence relation** if the relation R is transitive, symmetric and reflexive.

The **equivalence class** of a is the set of all elements that are relation to a. Notation: $[a]_R$

Step 2

2 of 5

SOLUTION

$$A = \{(x, y) \in \mathbf{R} \times \mathbf{R} | \, |x| = |y|\}$$

(1) To proof: A is an equivalence relation

PROOF

Reflexive

Let $x \in \mathbf{R}$.

Since $|x| = |x|$, $(x, x) \in A$.

Since $(x, x) \in A$ for all $x \in \mathbf{R}$, A is indeed reflexive.

Symmetric

Let us assume that $(x, y) \in A$. By the definition of A:

$$|x| = |y|$$

However, if $|x| = |y|$, then $|y| = |x|$ also holds.

$$(y, x) \in A$$

Since $(x, y) \in A$ implies $(y, x) \in A$, A is symmetric.

Transitive

Let us assume that $(x, y) \in A$ and $(y, z) \in A$.

By the definition of A:

$$|x| = |y|$$

$$|y| = |z|$$

However, this then implies that $|x| = |y| = |z|$ and thus $|x| = |z|$.

$$(x, z) \in A$$

Since $(x, y) \in A$ and $(y, z) \in A$ implies $(x, z) \in A$, A is transitive.

Step 3

3 of 5

Equivalence relation

Since A is reflexive, symmetric and transitive, A is also an equivalence relation.

$\square$

Step 4

4 of 5

(2) Two real numbers are related if they have the same absolute value.

If $x = 0$, then 0 is the only value with absolute value equal to 0 and thus the corresponding equivalence class is $\{0\}$.

If $x \neq 0$, then x and $-x$ have the same absolute value and thus the corresponding equivalence class is then $\{x, -x\}$.

Result

5 of 5

(1) Show that A is an equivalence relation by showing that A is reflexive, symmetric and transitive.

(2) The equivalence classes are then $\{0\}$ and $\{x, -x\}$ for all $x \in \mathbf{R} - \{0\}$.

Exercise 24 Exercise 26

Exercise 25

Chapter 8, section 8.3, page 522

Discrete Mathematics with Applications
ISBN: 9781337694193

Table of contents

Solutions

Verified

Solution A Solution B

$\forall x, y \in \mathbb{R}, \quad x A y \Leftrightarrow |x| = |y|.$

1) For $x \in \mathbb{R}$, $|x| = |x| \Rightarrow x A x \Rightarrow A$ is reflexive.

For $x, y \in \mathbb{R}$,

$x A y \Rightarrow |x| = |y| \Rightarrow |y| = |x| \Rightarrow y A x \Rightarrow A$ is symmetric.

For $x, y, z \in \mathbb{R}$.

$x A y, y A z \Rightarrow |x| = |y|$ and $|y| = |z|$

$\Rightarrow |x| = |z| \Rightarrow x A z. \Rightarrow A$ is transitive.

Hence A is reflexive, symmetric and transitive,

So, A is an equivalence relation.

2) To find all equivalence classes.

$[x] = \{y \in \mathbb{R} : |x| = |y|\}$

$= \{x, -x\}$

Therefore, All equivalence classes are $\{x, -x\}$ where $x \in \mathbb{R}$.

Exercise 24 Exercise 26

Exercise 26

Chapter 8, section 8.3, page 522

Discrete Mathematics with Applications
ISBN: 9781337694193
Table of contents

Solution

Verified

Step 1

1 of 2

D is a relation on $\mathbb{Z}$ for $m,n \in \mathbb{Z}$,

$$mDn \Leftrightarrow 3 \mid m^2-n^2.$$

1) For any $m \in \mathbb{Z}$, $m^2-m^2=0 \Rightarrow 3 \mid m^2-m^2 \Rightarrow mDm$

$\Rightarrow$ D is reflexive

For $m,n \in \mathbb{Z}$ such that mDn,

$mDn \Rightarrow 3 \mid m^2-n^2 \Rightarrow m^2-n^2 = 3k$ for some $k \in \mathbb{Z}$

$\Rightarrow n^2-m^2 = 3(-k)$ & $-k \in \mathbb{Z}$

$\Rightarrow 3 \mid n^2-m^2$

$\Rightarrow nDm$

$\Rightarrow$ D is symmetric

For $m,n,p \in \mathbb{Z}$, such that mDn, nDp

Therefore, $3 \mid m^2-n^2$ & $3 \mid n^2-p^2$

$\Rightarrow m^2-n^2 = 3k$ & $n^2-p^2 = 3l$, for some $k,l \in \mathbb{Z}$

$\Rightarrow m^2-n^2+n^2-p^2 = 3k+3l$

$\Rightarrow m^2-p^2 = 3(k+l)$ & $k+l \in \mathbb{Z}$

$\Rightarrow mDp$

$\Rightarrow$ D is transitive.

So, D is reflexive, symmetric and transitive

2) To find equivalence classes.

By division algorithm, for any $m \in \mathbb{Z}$, $\exists$ unique q, r such that,

$$m = 3q+r \quad 0 \le r < 3$$

$\Rightarrow m = 3q$ or $m = 3q+1$ or $m = 3q+2$

$\Rightarrow m^2 = (3q)^2$ or $m^2 = (3q+1)^2$ or $m^2 = (3q+2)^2$

$\Rightarrow m^2 = 3(3q^2)$ or $m^2 = (3q)^2+2(3q)+1^2$ or

$m^2 = (3q)^2+2(6q)+2^2 = 3(3q^2)+3(4q)+3+1^2$

$\Rightarrow m^2-0^2 = 3(3q^2)$ or $m^2-1^2 = 3(3q^2+2q)$ or

$m^2-1^2 = 3(3q^2+4q)$

$\Rightarrow 3 \mid m^2-0^2$ or $3 \mid m^2-1^2 \Rightarrow$ $\boxed{\text{Equiv. classes are } [0], [1]}$

Step 2

2 of 2

$[0] = \{3k : k \in \mathbb{Z}\}$

$$[1] = \{3k+1 : k \in \mathbb{Z}\} \cup \{3k+2 : k \in \mathbb{Z}\}$$

Exercise 25 Exercise 27

Exercise 27

Chapter 8, section 8.3, page 522

Discrete Mathematics with Applications
ISBN: 9781337694193

Table of contents

Solution Verified

Step 1

1 of 5

DEFINITIONS

a **divides** b if there exists an integer c such that $b = ac$

Notation: $a|b$

Division algorithm Let a be an integer and d a positive integer. Then there are unique integers q and r with $0 \leq r < d$ such that $a = dq + r$

q is called the **quotient** and r is called the **remainder**

$$q = a \textbf{ div } d$$

$$r = a \textbf{ mod } d$$

a is **congruent to** b **modulo** m if m divides $a - b$

Notation: $a \equiv b \pmod{m}$

A relation R on a set A is **reflexive** if $(a, a) \in R$ for every element $a \in A$.

A relation R on a set A is **symmetric** if $(b, a) \in R$ whenever $(a, b) \in R$

A relation R on a set A is **transitive** if $(a, b) \in R$ and $(b, c) \in R$ implies $(a, c) \in R$

A relation R is an **equivalence relation** if the relation R is transitive, symmetric and reflexive.

The **equivalence class** of a is the set of all elements that are relation to a. Notation: $[a]_R$

Step 2

2 of 5

SOLUTION

$$A = \mathbf{Z}$$
$$R = \{(m, n) \in A \times A | \, 4|(m^2 - n^2)\}$$

(1) To proof: R is an equivalence relation

PROOF

Reflexive

Let $x \in A = \mathbf{Z}$

$$x^2 - x^2 = 0 = 0 \cdot 4$$

By the definition of divides, 4 divides $x^2 - x^2$ and thus $(x, x) \in R$

Since $(x, x) \in R$ for all $x \in A$ and thus R is indeed reflexive.

Symmetric

Let us assume that $(x, y) \in R$. By the definition of R:

$$4|(x^2 - y^2)$$

By the definition of divides, there exists an integer k such that:

$$x^2 - y^2 = 4k$$

Multiply each side by -1:

$$-(x^2 - y^2) = -(4k)$$

Use the distributive property:

$$y^2 - x^2 = 4(-k)$$

By the definition of divides, 4 divides $y - x$ as $-k$ is an integer (because k is an integer).

$$(y, x) \in R$$

Since $(x, y) \in R$ implies $(y, x) \in R$, R is symmetric.

Step 3

3 of 5

Transitive

Let us assume that $(x, y) \in R$ and $(y, z) \in R$.

By the definition of R:

$$4|(x^2 - y^2)$$
$$4|(y^2 - z^2)$$

By the definition of divides, there exist integers k and l such that:

$$x^2 - y^2 = 4k$$
$$y^2 - z^2 = 4l$$

Add the previous two equations:

$$(x^2 - y^2) + (y^2 - z^2) = 4k + 4l$$

Combine like terms:

$$x^2 - z^2 = 4k + 4l$$

Use distributive property:

$$x^2 - z^2 = 4(k + l)$$

By the definition of divides, 4 divides $x^2 - z^2$ as $k + l$ is an integer (because k is an integer and l is an integer).

$$(x, z) \in R$$

Since $(x, y) \in R$ and $(y, z) \in R$ implies $(x, z) \in R$, R is transitive.

Equivalence relation

Since R is reflexive, symmetric and transitive, R is also an equivalence relation.

$\square$

Step 4

4 of 5

(2) Let $m \in \mathbf{Z}$. By the division algorithm, we know that there exist integers q and r with $0 \leq r < 4$ such that:

$$m = 4q + r$$

Since $0 \leq r < 4$:

$$m = 4q \text{ or } m = 4q + 1 \text{ or } m = 4q + 2 \text{ or } m = 4q + 3$$

Let us next determine the square of each option:

$$\begin{aligned}
m^2 &= (4q)^2 = 4^2q^2 = 16q^2 = 4(4q^2) && \equiv 0 \pmod 4 \\
\text{or } m^2 &= (4q+1)^2 = (4q)^2 + 2(4q)(1) + 1^2 = 16q^2 + 8q + 1 = 4(4q^2 + 2q) + 1 && \equiv 1 \pmod 4 \\
\text{or } m^2 &= (4q+2)^2 = (4q)^2 + 2(4q)(2) + 2^2 = 16q^2 + 16q + 4 = 4(4q^2 + 4q + 1) && \equiv 0 \pmod 4 \\
\text{or } m^2 &= (4q+3)^2 = (4q)^2 + 2(4q)(3) + 3^2 = 16q^2 + 24q + 9 = 4(4q^2 + 6q + 2) + 1 && \equiv 1 \pmod 4
\end{aligned}$$

Thus we then note that

$m^2 \equiv 0 \pmod 4$ when $m = 4q$ or $m = 4q + 2$

$m^2 \equiv 1 \pmod 4$ when $m = 4q + 1$ or $m = 4q + 3$

Or equivalently:

$m^2 - 0^2 \equiv 0 \pmod 4$ (or equivalently 4 divides $m^2 - 0^2$) when $m = 4q$ or $m = 4q + 2$

$m^2 - 1^2 \equiv 0 \pmod 4$ (or equivalently 4 divides $m^2 - 1^2$) when $m = 4q + 1$ or $m = 4q + 3$

This then implies that there are 2 equivalence classes: one class with $m = 4q$ or $m = 4q + 2$ (which are all even integers) and one class with $m = 4q + 1$ or $m = 4q + 3$ (which are all odd integers).

$$\text{First equivalence class} = \text{Set of all even integers}$$
$$\text{Second equivalence class} = \text{Set of all odd integers}$$

Result

5 of 5

(1) Show that R is an equivalence relation by showing that R is reflexive, symmetric and transitive.

(2) There are two equivalence classes: the set of all even integers and the set of all odd integers.

Exercise 26 Exercise 28

Exercise 28

Chapter 8, section 8.3, page 522

Discrete Mathematics with Applications
ISBN: 9781337694193
Table of contents

Solution

Verified

Step 1

1 of 4

Solution:

a) In order for a relation to be an equivalence relation, it must be reflexive, symmetric and transitive. We have the relation I defined on $\mathbb{R}$ as follows:

$$\forall x, y \in \mathbb{R} \;\; xIy \iff x - y \text{ is an integer}$$

Reflexive:

The relation I on $\mathbb{R}$ is reflexive if for any element $x \in \mathbb{R}$ we have that xIx. In our case, this means that for any real number x the difference $x - x = 0$ is an integer. Since this holds for any $x \in \mathbb{R}$, we have that I is reflexive.

Symmetric:

The relation I on $\mathbb{R}$ is symmetric if for any two elements $x, y \in \mathbb{R}$ we have that the following implication holds:

$$xIy \implies yIx\,.$$

In our case, this means that if $x - y$ is an integer, then it follows that $y - x$ is also an integer for any two real numbers x, y. Assuming that $x - y$ is an integer, we can write the other difference like this:

$$y - x = -\underbrace{(x - y)}_{\in \mathbb{Z}}$$

For the set of integers, we have that if $a \in \mathbb{Z}$, its inverse for addition is also an integer, i.e. $-a \in \mathbb{Z}$. Therefore, we conclude that $y - x \in \mathbb{Z}$, hence the conclusion part if the implication is true and so, the entire implication is true. This means that the relation I is symmetric.

Transitive:

The relation I on $\mathbb{R}$ is transitive if for any three elements $x, y, z \in \mathbb{R}$ we have that the following implication holds:

$$(xIy \wedge yIz) \implies (xIz)\,.$$

Step 2

2 of 4

For this exercise, it means that if $x - y$ is an integer and $y - z$ is an integer, then so is $x - z$. We know that the sum of two integers is also an integer and using that, we have that $x - z$ can be written as follows:

$$x - z = \underbrace{x - y}_{\in \mathbb{Z}} + \underbrace{y - z}_{\in \mathbb{Z}}$$

Therefore, the difference $x - z$ is an integer as a sum of two integers and this holds for any three real numbers. Hence, the observed relation I is transitive.

Since we have all three properties proven, we conclude that I is a relation of equivalence.

b) To describe the distinct equivalence classes of the relation I, we will first observe an arbitrary element $x \in \mathbb{R}$ and try to see which elements belong to $[x]$.

1. If that element x is an integer, we must subtract another integer y from x so that the difference $x - y$ is an integer. This is the only way for $x - y$ to be an integer. Therefore, in the equivalence class of any integer x we have all the other integers, hence $\boxed{[x] = \mathbb{Z}}$, for any $x \in \mathbb{Z}$.
2. If we observe any real number $x \in \mathbb{R} \backslash \mathbb{Z}$, it follows that this element can be written in a decimal form (finite or infinite)

$$x = y.abcde...$$

This decimal form can be separated into two terms

$$x = n + 0.abcde...$$

where $n = \lfloor x \rfloor \in \mathbb{Z}$ and $0.abcde... \in [0, 1)$. In order for another real number z to be in relation I with x, i.e. $(x, z) \in I$, it must have the same decimal part $0.abcde...$ as x, but the first term n can be any other integer m. Hence, all the other elements from $\mathbb{R}$ that are in the equivalence class $[x]$ have this form $z = m + 0.abcde..., m \in \mathbb{Z}$.

Step 3

3 of 4

As we can see, the only thing that is fixed for the entire class $[x]$ is $0.abcde...$. Therefore, for every other $0.ABCDE... \in [0, 1)$ we have a distinct equivalence class.

Therefore, for all the real numbers x from the interval $[0, 1)$, we have a distinct equivalence class of this form:

$$\boxed{\{y \in \mathbb{R} |\; y = n + x \text{ for some integer } n\}}$$

To sum up, the first part, where we observed only the integers, can be included in this final result for the case $x = 0 \in [0, 1)$.

Result

4 of 4

a) See the basic proof that I is the equivalence relation, using the properties of integers above.

b) For all the real numbers x from the interval $[0, 1)$, we have a distinct equivalence class of this form:

$$\boxed{\{y \in \mathbb{R} |\; y = n + x \text{ for some integer } n\}}$$

Exercise 27 Exercise 29

Exercise 29

Chapter 8, section 8.3, page 522

Discrete Mathematics with Applications
ISBN: 9781337694193

Table of contents

Solution

Verified

Step 1

1 of 5

DEFINITIONS

A relation R on a set A is **reflexive** if $(a, a) \in R$ for every element $a \in A$.

A relation R on a set A is **symmetric** if $(b, a) \in R$ whenever $(a, b) \in R$

A relation R on a set A is **transitive** if $(a, b) \in R$ and $(b, c) \in R$ implies $(a, c) \in R$

A relation R is an **equivalence relation** if the relation R is transitive, symmetric and reflexive.

The **equivalence class** of a is the set of all elements that are relation to a. Notation: $[a]_R$

Step 2

2 of 5

SOLUTION

$$A = \mathbf{R} \times \mathbf{R}$$
$$P = \{((w, x), (y, z)) \in A \times A | \, w = y\}$$

(1) To proof: P is an equivalence relation

PROOF

Reflexive

Let $(x, y) \in A = \mathbf{R} \times \mathbf{R}$

$$x = x$$

Since $x = x$, $((x, y), (x, y)) \in P$

Since $((x, y), (x, y)) \in P$ for all $(x, y) \in A$ and thus P is indeed reflexive.

Symmetric

Let us assume that $((w, x), (y, z)) \in P$. By the definition of P:

$$w = y$$

However, $w = y$ is equivalent with $y = w$.

$$((y, z), (w, x)) \in P$$

Since $((w, x), (y, z)) \in P$ implies $((y, z), (w, x)) \in P$, P is symmetric.

Step 3

3 of 5

Transitive

Let us assume that $((w, x), (y, z)) \in P$ and $((y, z), (a, b)) \in P$.

By the definition of P:

$$w = y$$
$$y = a$$

However, we then note that $w = y = a$ and thus $w = a$ holds.

$$((w, x), (a, b)) \in P$$

Since $((w, x), (y, z)) \in P$ and $((y, z), (a, b)) \in P$ implies $((w, x), (a, b)) \in P$, P is transitive.

Equivalence relation

Since P is reflexive, symmetric and transitive, P is also an equivalence relation.

$\square$

Step 4

4 of 5

(2) Two ordered pairs are related, if their first coordinate is the same.

This then implies that each equivalence class is of the form $\{(x, y) | y \in \mathbf{R}\}$ for some real number x (note that there is an (unique) equivalence class per real number).

Result

5 of 5

(1) Show that P is an equivalence relation by showing that P is reflexive, symmetric and transitive.

(2) Each equivalence class is of the form $\{(x, y) | y \in \mathbf{R}\}$ with x some real number.

Exercise 28 Exercise 30

Exercise 30

Chapter 8, section 8.3, page 522

Discrete Mathematics with Applications
ISBN: 9781337694193

Table of contents

Solution

Verified

Step 1

1 of 5

DEFINITIONS

A relation R on a set A is **reflexive** if $(a, a) \in R$ for every element $a \in A$.

A relation R on a set A is **symmetric** if $(b, a) \in R$ whenever $(a, b) \in R$

A relation R on a set A is **transitive** if $(a, b) \in R$ and $(b, c) \in R$ implies $(a, c) \in R$

A relation R is an **equivalence relation** if the relation R is transitive, symmetric and reflexive.

The **equivalence class** of a is the set of all elements that are relation to a. Notation: $[a]_R$

Step 2

2 of 5

SOLUTION

$$A = \mathbf{R} \times \mathbf{R}$$
$$Q = \{((w, x), (y, z)) \in A \times A | \, x = z\}$$

(1) To proof: Q is an equivalence relation

PROOF

Reflexive

Let $(x, y) \in A = \mathbf{R} \times \mathbf{R}$

$$y = y$$

Since $y = y$, $((x, y), (x, y)) \in Q$

Since $((x, y), (x, y)) \in Q$ for all $(x, y) \in A$ and thus Q is indeed reflexive.

Symmetric

Let us assume that $((w, x), (y, z)) \in Q$. By the definition of Q:

$$x = z$$

However, $x = z$ is equivalent with $z = x$.

$$((y, z), (w, x)) \in Q$$

Since $((w, x), (y, z)) \in Q$ implies $((y, z), (w, x)) \in Q$, Q is symmetric.

Step 3

3 of 5

Transitive

Let us assume that $((w, x), (y, z)) \in Q$ and $((y, z), (a, b)) \in Q$.

By the definition of Q:

$$x = z$$

$$z = b$$

However, we then note that $x = z = b$ and thus $x = b$ holds.

$$((w, x), (a, b)) \in Q$$

Since $((w, x), (y, z)) \in Q$ and $((y, z), (a, b)) \in Q$ implies $((w, x), (a, b)) \in Q$, Q is transitive.

Equivalence relation

Since Q is reflexive, symmetric and transitive, Q is also an equivalence relation.

$\square$

Step 4

4 of 5

(2) Two ordered pairs are related, if their second coordinate is the same.

This then implies that each equivalence class is of the form $\{(x, y) | x \in \mathbf{R}\}$ for some real number y (note that there is an (unique) equivalence class per real number).

Result

5 of 5

(1) Show that P is an equivalence relation by showing that P is reflexive, symmetric and transitive.

(2) Each equivalence class is of the form $\{(x, y) | x \in \mathbf{R}\}$ with y some real number.

Exercise 29 Exercise 31

Exercise 31

Chapter 8, section 8.3, page 522

Discrete Mathematics with Applications
ISBN: 9781337694193

Table of contents

Solutions

Verified

Solution A Solution B

Step 1

1 of 5

DEFINITIONS

A relation R on a set A is **reflexive** if $(a, a) \in R$ for every element $a \in A$.

A relation R on a set A is **symmetric** if $(b, a) \in R$ whenever $(a, b) \in R$

A relation R on a set A is **transitive** if $(a, b) \in R$ and $(b, c) \in R$ implies $(a, c) \in R$

A relation R is an **equivalence relation** if the relation R is transitive, symmetric and reflexive.

The **equivalence class** of a is the set of all elements that are relation to a. Notation: $[a]_R$

Step 2

2 of 5

SOLUTION

$$P = \text{Set of all points in the Cartesian plane excluding the origin}$$
$$R = \{(p, q) \in P \times P \mid p \text{ and } q \text{ lie on the same half-line emanating from the origin}\}$$

(1) To proof: R is an equivalence relation

PROOF

Reflexive

Let $x \in P$

Since a point x always lies on the same half-line emanating from the origin as itself, $(x, x) \in R$.

Since $(x, x) \in R$ for all $x \in P$, R is indeed reflexive.

Symmetric

Let us assume that $(x, y) \in R$. By the definition of R:

$$x \text{ and } y \text{ lie on the same half-line emanating from the origin}$$

However, if x and y lie on the same half-line emanating from the origin, then y and x also lie on the same half-line emanating from the origin.

$$(y, x) \in R$$

Since $(x, y) \in R$ implies $(y, x) \in R$, R is symmetric.

Step 3

3 of 5

Transitive

Let us assume that $(x, y) \in R$ and $(y, z) \in R$.

By the definition of R:

$$x \text{ and } y \text{ lie on the same half-line emanating from the origin}$$

$$y \text{ and } z \text{ lie on the same half-line emanating from the origin}$$

However, this then implies that x, y and z all lie on the same half-line emanating from the origin, thus x and z lie on the same half-line emanating from the origin.

$$(x, z) \in R$$

Since $(x, y) \in R$ and $(y, z) \in R$ implies $(x, z) \in R$, R is transitive.

Equivalence relation

Since R is reflexive, symmetric and transitive, R is also an equivalence relation.

$\square$

Step 4

4 of 5

(2) Two points are related if they lie on the same half-line emanating from the origin.

Each equivalence class then consists of all points on the same half-line emanating from the origin.

Result

5 of 5

(1) Show that R is an equivalence relation by showing that R is reflexive, symmetric and transitive.

(2) Each equivalence class consists of all points on the same half-line emanating from the origin.

Exercise 30 Exercise 32

Exercise 31

Chapter 8, section 8.3, page 522

Discrete Mathematics with Applications
ISBN: 9781337694193

Table of contents

Solutions

Verified

Solution A Solution B

Step 1

1 of 2

The relation R being reflexive, symmetric and transitive is an equivalence relation

P set of all points in the Cartesian plane except the origin.

$P_1, P_2 \in P$

$P_1 R P_2 \Leftrightarrow P_1$ and P_2 lie on the same half line emanating from the origin.

Reflexive: Let $p \in P$

Draw the line passing through the origin & p. This means, p and p lie on the same half line emanating from the origin.

$\boxed{\therefore p R p}$

Symmetric: Let $p, q \in P$ s.t.

$p R q$

This means, p and q lie on the same half line emanating from the origin, which means q and p lie on the same half line emanating from the origin. Therefore,

$\boxed{q R p}$

Transitive: Let $p, q, r \in P$ such that,

$p R q$ and $q R r$.

Therefore, p and q lie on the same line say L_1 emanating from the origin; q and r lie on the same half line emanating from the origin, call it L_2. But L_1 and L_2 both pass through origin and point q (q is not origin), therefore $L_1 = L_2$. So, p and r lie on L_1 and hence $\boxed{p R r}$.

Note that in case of transitive, since $q \neq (0,0)$, the lines L_1 and L_2 are line passing through two distinct points $(0,0)$ and q. We know that a line is uniquely determined by two distinct points it passes through. So, L_1 and L_2 are same lines.

Step 2

2 of 2

To find equivalence classes.

For $p \in P$,

$[p] = \{q \in P$: p and q lie on the same line emanating from the origin$\}$

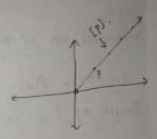

= Set of all points on the line segment emanating from the origin passing through point p.

Exercise 30 Exercise 32

Exercise 32

Chapter 8, section 8.3, page 522

Discrete Mathematics with Applications
ISBN: 9781337694193

Table of contents

Solution

Verified

Step 1

1 of 3

DEFINITIONS

A relation R on a set A is **reflexive** if $(a, a) \in R$ for every element $a \in A$.

A relation R on a set A is **symmetric** if $(b, a) \in R$ whenever $(a, b) \in R$

A relation R on a set A is **transitive** if $(a, b) \in R$ and $(b, c) \in R$ implies $(a, c) \in R$

A relation R is an **equivalence relation** if the relation R is transitive, symmetric and reflexive.

The **equivalence class** of a is the set of all elements that are relation to a. Notation: $[a]_R$

Step 2

2 of 3

SOLUTION

$$A = \text{Set of all straight lines in the Cartesian plane}$$
$$|| = \{(p, q) \in A \times A | \, p \text{ and } q \text{ are parallel}\}$$

We know that $||$ is an equivalence relation.

Two straight lines are related if they are parallel.

In general, the equation of a straight line is $y = mx + b$ with m the slope and b the y-intercept. Two straight lines are parallel when they have the same slope and thus if they have the same value of m.

Each equivalence class then contains all straight lines of the form $y = mx + b$ for a constant value of m and thus each equivalence class is of the form $\{y = mx + b | b \in \mathbf{R}\}$ for some real number m.

However, if the line is horizontal, then the equation of the straight line is of the form $x = k$ for some integer k. Since all horizontal lines are parallel, their corresponding equivalence class is $\{x = k | k \in \mathbf{R}\}$

Result

3 of 3

The equivalence classes are $\{x = k | k \in \mathbf{R}\}$ and $\{y = mx + b | b \in \mathbf{R}\}$ for some real number m

Exercise 31 Exercise 33

Exercise 33

Chapter 8, section 8.3, page 522

Discrete Mathematics with Applications
ISBN: 9781337694193

Table of contents

Solution

Verified

Step 1

1 of 2

Given:

$$A = \{(x, y) \in \mathbf{R} \times \mathbf{R} | 0 \leq x \leq 1 \text{ and } 0 \leq y \leq 1\}$$
$$\begin{aligned} R = \{((x_1, y_1), (x_2, y_2)) | (x_1, y_1) = (x_2, y_2) \text{ or} \\ (x_1 = 0 \text{ and } x_2 = 1 \text{ and } y_1 = x_2) \text{ or} \\ (x_1 = 1 \text{ and } x_2 = 0 \text{ and } y_1 = x_2) \text{ or} \\ (y_1 = 0 \text{ and } y_2 = 1 \text{ and } x_1 = x_2) \text{ or} \\ (y_1 = 1 \text{ and } y_2 = 0 \text{ and } x_1 = x_2)\} \end{aligned}$$

Basically, we start with a square (area of A) of which the bottom edge is attached to the top edge and the left edge is attached to the right edge.

When we first attach the top edge to the bottom edge, then you obtain a cylinder (with a circular opening on either side).

If we next attach the left edge to the right edge, then the circular openings of the cylinder are glued together, which will result in a torus (donut shape).

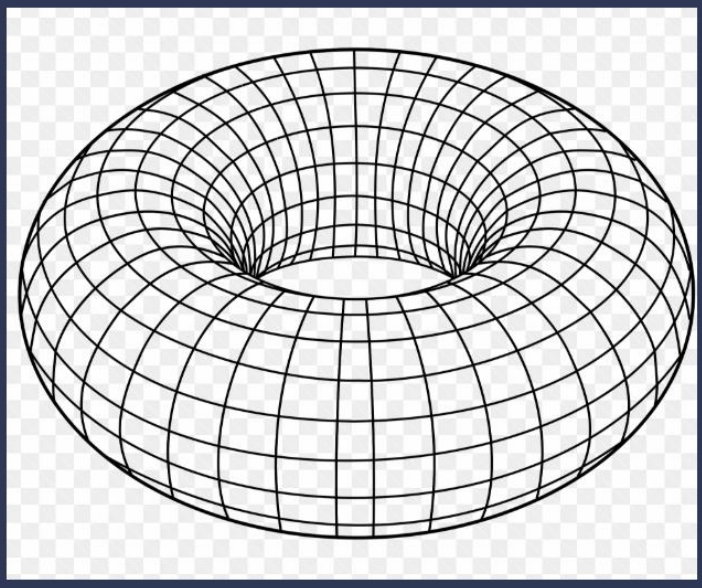

Result

2 of 2

Torus

Exercise 32 Exercise 34

Exercise 34

Chapter 8, section 8.3, page 522

Discrete Mathematics with Applications
ISBN: 9781337694193
Table of contents

Solution

Verified

Step 1

1 of 4

DEFINITIONS

A relation R on a set A is **reflexive** if $(a, a) \in R$ for every element $a \in A$.

A relation R on a set A is **symmetric** if $(b, a) \in R$ whenever $(a, b) \in R$

A relation R on a set A is **transitive** if $(a, b) \in R$ and $(b, c) \in R$ implies $(a, c) \in R$

A relation R is an **equivalence relation** if the relation R is transitive, symmetric and reflexive.

The **equivalence class** of a is the set of all elements that are relation to a. Notation: $[a]_R$

Step 2

2 of 4

SOLUTION

$$\begin{aligned} P &= \text{All objects in the class} \\ R &= \{(p, q) \in P \times P \mid \text{ distance from } p \text{ to } q \text{ is less than or equal to } c\} \\ &\text{Let } c \text{ be some small positive number} \end{aligned}$$

Reflexive?

Let $x \in P$

Since the distance from an objects to itself is always 0 and since $0 \leq c$ (as c is positive), $(x, x) \in R$.

Since $(x, x) \in R$ for all $x \in P$, R is indeed **reflexive**.

Symmetric?

Let us assume that $(x, y) \in R$. By the definition of R:

$$\text{distance from } x \text{ to } y \text{ is less than or equal to } c$$

However, if the distance from x to y is less than or equal to c, then the distance from y to x is less than or equal to c.

$$(y, x) \in R$$

Since $(x, y) \in R$ implies $(y, x) \in R$, R is **symmetric**.

Step 3

3 of 4

Transitive?

Let us assume that $(x, y) \in R$ and $(y, z) \in R$.

By the definition of R:

$$\text{Distance from } x \text{ to } y \text{ is less than or equal to } c$$

$$\text{Distance from } y \text{ to } z \text{ is less than or equal to } c$$

However, if the objects x and z lie on opposite sides of y with both a distance c away from y, then the distance between x and z is $c + c = 2c$. In this case, we then note that the distance between x and z is more than c, which implies $(x, z) \notin R$.

Since $(x, y) \in R$ and $(y, z) \in R$ does not necessarily imply $(x, z) \in R$, R is **not transitive**.

Equivalence relation?

R is **not an equivalence relation**, because R is not transitive.

$\square$

Result

4 of 4

Not an equivalence relation

Exercise 33 Exercise 35

Exercise 35

Chapter 8, section 8.3, page 523

Discrete Mathematics with Applications
ISBN: 9781337694193
Table of contents

Solution Verified

Step 1

1 of 2

Given:

Input		Output
P	Q	R
1	1	0
1	0	0
0	1	0
0	0	1

We then note that the output is 1 if both inputs are 0.

Thus the input is 0 if P and Q are both 1 $(P \wedge Q)$, if P is 1 and Q is 0 $(P \wedge \sim Q)$ or if P is 0 and Q is 1 $(\sim P \wedge Q)$.

$$\text{Input}=0 \Leftrightarrow (P \wedge Q) \vee (P \wedge \sim Q) \vee (\sim P \wedge Q)$$

The input is then 1 is the input is not 0.

$$\text{Input}=1 \Leftrightarrow \sim ((P \wedge Q) \vee (P \wedge \sim Q) \vee (\sim P \wedge Q))$$

$\sim$ represents "NOT", $\wedge$ represents "AND" and $\vee$ represent "OR", thus the corresponding circuit is then:

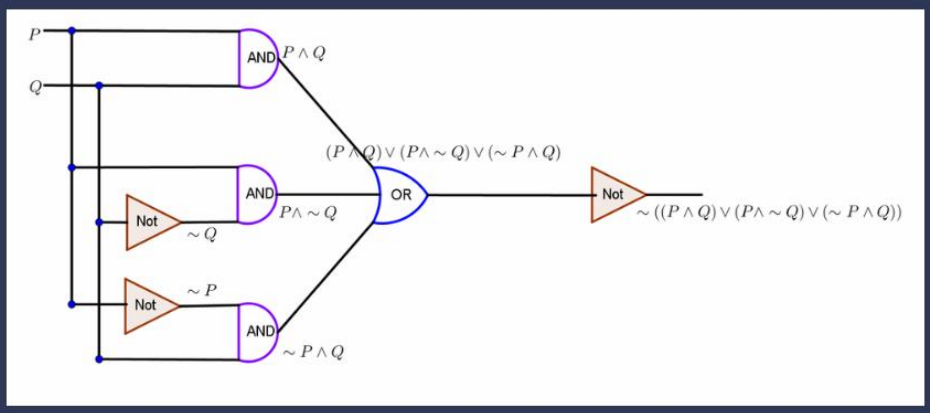

Result

2 of 2

Answers could vary

Exercise 34 Exercise 36

Exercise 36

Chapter 8, section 8.3, page 523

Discrete Mathematics with Applications
ISBN: 9781337694193

Table of contents

Solution

Verified

Step 1

1 of 3

DEFINITIONS

A relation R on a set A is **reflexive** if $(a, a) \in R$ for every element $a \in A$.

A relation R on a set A is **symmetric** if $(b, a) \in R$ whenever $(a, b) \in R$

A relation R on a set A is **transitive** if $(a, b) \in R$ and $(b, c) \in R$ implies $(a, c) \in R$

A relation R is an **equivalence relation** if the relation R is transitive, symmetric and reflexive.

The **equivalence class** of a is the set of all elements that are relation to a

Notation: $[a]$

$$[a] = \{x \in A | x \, R \, a\}$$

Step 2

2 of 3

SOLUTION

Given:

R is an equivalence relation on a set A

To proof: For all $a \in A$, $a \in [a]$

PROOF

Let $a \in A$

Since R is an equivalence relation, R is reflexive, symmetric and transitive.

By the definition of reflexive:

$$(a, a) \in R \text{ or equivalently } a \, R \, a$$

By the definition of $[a]$:

$$[a] = \{x \in A | x \, R \, a\}$$

Since $a \, R \, a$ is true and since $a \in A$, we then note that

$$a \in [a]$$

$$\square$$

Result

3 of 3

We proof that $a \in [A]$ for all $a \in A$ by using that R is reflexive and the definition of the equivalence class.

Exercise 35 Exercise 37

Exercise 37

Chapter 8, section 8.3, page 523

Discrete Mathematics with Applications
ISBN: 9781337694193

Table of contents

Solution

Verified

Step 1

1 of 3

DEFINITIONS

A relation R on a set A is **reflexive** if $(a, a) \in R$ for every element $a \in A$.

A relation R on a set A is **symmetric** if $(b, a) \in R$ whenever $(a, b) \in R$

A relation R on a set A is **transitive** if $(a, b) \in R$ and $(b, c) \in R$ implies $(a, c) \in R$

A relation R is an **equivalence relation** if the relation R is transitive, symmetric and reflexive.

The **equivalence class** of a is the set of all elements that are relation to a

Notation: $[a]$

$$[a] = \{x \in A | x \, R \, a\}$$

Step 2

2 of 3

SOLUTION

Given:

R is an equivalence relation on a set A

To proof: For all $a \in A$ and for all $b \in A$, if $b \in [a]$, then $a \, R \, b$

PROOF

Let $a \in A$ and let $b \in A$ such that $b \in [a]$

By the definition of $[a]$:

$$[a] = \{x \in A | x \, R \, a\}$$

Since $b \in [a]$:

$$b \, R \, a$$

Since R is an equivalence relation, R is reflexive, symmetric and transitive. By the definition of symmetric:

$$a \, R \, b$$

$$\square$$

Result

3 of 3

We proof that if $b \in [a]$, then $a \, R \, b$ for all $a \in A$ and for all $b \in A$ by using that R is symmetric and the definition of the equivalence class.

Exercise 36 Exercise 38

Exercise 38

Chapter 8, section 8.3, page 523

Discrete Mathematics with Applications
ISBN: 9781337694193

Table of contents

Solution

Verified

Step 1

1 of 3

DEFINITIONS

A relation R on a set A is **reflexive** if $(a, a) \in R$ for every element $a \in A$.

A relation R on a set A is **symmetric** if $(b, a) \in R$ whenever $(a, b) \in R$

A relation R on a set A is **transitive** if $(a, b) \in R$ and $(b, c) \in R$ implies $(a, c) \in R$

A relation R is an **equivalence relation** if the relation R is transitive, symmetric and reflexive.

The **equivalence class** of a is the set of all elements that are relation to a

Notation: $[a]$

$$[a] = \{x \in A | x\, R\, a\}$$

Step 2

2 of 3

SOLUTION

Given:

R is an equivalence relation on a set A

To proof: For all $a, b, c \in A$, if $b\, R\, c$ and $c \in [a]$, then $b \in [a]$

PROOF

Let $a \in A$, $b \in A$ and $c \in A$ such that $b\, R\, c$ and $c \in [a]$

By the definition of $[a]$:

$$[a] = \{x \in A | x\, R\, a\}$$

Since $c \in [a]$:

$$c\, R\, a$$

Since R is an equivalence relation, R is reflexive, symmetric and transitive. By the definition of transitive on $b\, R\, c$ and $c\, R\, a$:

$$b\, R\, a$$

By the definition of $[a] = \{x \in A | x\, R\, a\}$

$$b \in [a]$$

$$\square$$

Result

3 of 3

We proof that if $b\, R\, c$ and $c \in [a]$, then $b \in [a]$ for all $a, b, c \in A$ by using that R is transitive and the definition of the equivalence class.

Exercise 37 Exercise 39

Exercise 39

Chapter 8, section 8.3, page 523

Discrete Mathematics with Applications
ISBN: 9781337694193

Table of contents

Solution

Verified

Step 1

1 of 3

DEFINITIONS

A relation R on a set A is **reflexive** if $(a, a) \in R$ for every element $a \in A$.

A relation R on a set A is **symmetric** if $(b, a) \in R$ whenever $(a, b) \in R$

A relation R on a set A is **transitive** if $(a, b) \in R$ and $(b, c) \in R$ implies $(a, c) \in R$

A relation R is an **equivalence relation** if the relation R is transitive, symmetric and reflexive.

The **equivalence class** of a is the set of all elements that are relation to a

Notation: $[a]$

$$[a] = \{x \in A | x \, R \, a\}$$

Step 2

2 of 3

SOLUTION

Given:

R is an equivalence relation on a set A

To proof: For all $a, b \in A$, if $[a] = [b]$, then $a \, R \, b$

PROOF

Let $a \in A$ and let $b \in A$ such that $[a] = [b]$.

In one of the previous exercises, we showed that $a \in [a]$ (which followed from the reflexive property of R and the definition of $[a] = \{x \in A | x \, R \, a\}$).

$$a \in [a]$$

Since $[a] = [b]$:

$$a \in [b]$$

By the definition of $[b]$:

$$[b] = \{x \in A | x \, R \, b\}$$

Since $a \in [b]$:

$$a \, R \, b$$

$$\square$$

Result

3 of 3

We proof that if $[a] = [b]$, then $a \, R \, b$ for all $a, b, c \in A$ by using the definition of the equivalence class and the result of previous exercises.

Exercise 38 Exercise 40

Exercise 40

Chapter 8, section 8.3, page 523

Discrete Mathematics with Applications
ISBN: 9781337694193

Table of contents

Solutions

Verified

Solution A Solution B

Step 1

1 of 3

DEFINITIONS

A relation R on a set A is **reflexive** if $(a, a) \in R$ for every element $a \in A$.

A relation R on a set A is **symmetric** if $(b, a) \in R$ whenever $(a, b) \in R$

A relation R on a set A is **transitive** if $(a, b) \in R$ and $(b, c) \in R$ implies $(a, c) \in R$

A relation R is an **equivalence relation** if the relation R is transitive, symmetric and reflexive.

The **equivalence class** of a is the set of all elements that are relation to a

Notation: $[a]$

$$[a] = \{x \in A | x\ R\ a\}$$

Step 2

2 of 3

SOLUTION

Given:

R is an equivalence relation on a set A

To proof: For all $a, b, x \in A$, if $a\ R\ b$ and $x \in [a]$, then $x \in [b]$

PROOF

Let $a \in A$, $b \in A$ and $x \in A$ such that $a\ R\ b$ and $x \in [a]$.

By the definition of $[a] = \{x \in A | x\ R\ a\}$:

$$x\ R\ a$$

Since R is an equivalence relation, R is reflexive, symmetric and transitive. Using the definition of transitive on $x\ R\ a$ and $a\ R\ b$, we then obtain:

$$x\ R\ b$$

By the definition of $[b] = \{x \in A | x\ R\ b\}$

$$x \in [b]$$

$$\square$$

Result

3 of 3

Proof that if $a\ R\ b$ and $x \in [a]$, then $x \in [b]$ for all $a, b, x \in A$ by using the transitive property of R and the definition of an equivalence class.

Exercise 39 Exercise 41

Exercise 40

Chapter 8, section 8.3, page 523

Discrete Mathematics with Applications
ISBN: 9781337694193

Table of contents

Solutions

Verified

Solution A Solution B

For $a, b, x \in A$.

Suppose aRb and $x \in [a]$

$\Rightarrow aRb$ and xRa

$\Rightarrow xRa$ and aRb

$\Rightarrow xRb$ ... (Transitivity)

$\Rightarrow x \in [b]$.

Exercise 39 Exercise 41

Exercise 41

Chapter 8, section 8.3, page 523

Discrete Mathematics with Applications
ISBN: 9781337694193

Table of contents

Solution

Verified

Step 1

1 of 4

DEFINITIONS

A relation R on a set A is **reflexive** if $(a, a) \in R$ for every element $a \in A$.

A relation R on a set A is **symmetric** if $(b, a) \in R$ whenever $(a, b) \in R$

A relation R on a set A is **transitive** if $(a, b) \in R$ and $(b, c) \in R$ implies $(a, c) \in R$

A relation R is an **equivalence relation** if the relation R is transitive, symmetric and reflexive.

The **equivalence class** of a is the set of all elements that are relation to a

Notation: $[a]$

$$[a] = \{x \in A | x \, R \, a\}$$

Step 2

2 of 4

SOLUTION

Given:

R is an equivalence relation on a set A

To proof: For all $a, b \in A$, if $a \in [b]$, then $[a] = [b]$

PROOF

Let $a \in A$ and $b \in A$ such that $a \in [b]$.

First part $\subseteq$

Let $x \in [a]$.

By the definition of $[a] = \{x \in A | x \, R \, a\}$:

$$x \, R \, a$$

By the definition of $[b] = \{x \in A | x \, R \, b\}$ and $a \in [b]$:

$$a \, R \, b$$

Since R is an equivalence relation, R is reflexive, symmetric and transitive. Using the definition of transitive on $x \, R \, a$ and $a \, R \, b$, we then obtain:

$$x \, R \, b$$

By the definition of $[b] = \{x \in A | x \, R \, b\}$

$$x \in [b]$$

Since $x \in [a]$ implies $x \in [b]$, the definition of a subset tells us:

$$[a] \subseteq [b]$$

Step 3

3 of 4

Second part $\supseteq$

Let $x \in [b]$.

By the definition of $[b] = \{x \in A | x \, R \, b\}$:

$$x \, R \, b$$

By the definition of $[b] = \{x \in A | x \, R \, b\}$ and $a \in [b]$:

$$a \, R \, b$$

Since R is an equivalence relation, R is reflexive, symmetric and transitive. Using the definition of symmetric on $a \, R \, b$, we then obtain:

$$b \, R \, a$$

Using the definition of transitive on $x \, R \, b$ and $b \, R \, a$:

$$x \, R \, a$$

By the definition of $[a] = \{x \in A | x \, R \, a\}$

$$x \in [a]$$

Since $x \in [b]$ implies $x \in [a]$, the definition of a subset tells us:

$$[b] \subseteq [a]$$

Conclusion In the first and second part, we proved that $[a] \subseteq [b]$ and $[b] \subseteq [a]$, which then implies:

$$[a] = [b]$$

$$\square$$

Result

4 of 4

Proof thatif $a \in [b]$, then $[a] = [b]$ for all $a, b \in A$ by proving that $[a] \subseteq [b]$ and $[b] \subseteq [a]$

Exercise 40 Exercise 42

Exercise 42

Chapter 8, section 8.3, page 523

Discrete Mathematics with Applications
ISBN: 9781337694193

Table of contents

Solution

Verified

Step 1

1 of 6

DEFINITIONS

A relation R on a set A is **reflexive** if $(a, a) \in R$ for every element $a \in A$.

A relation R on a set A is **symmetric** if $(b, a) \in R$ whenever $(a, b) \in R$

A relation R on a set A is **transitive** if $(a, b) \in R$ and $(b, c) \in R$ implies $(a, c) \in R$

A relation R is an **equivalence relation** if the relation R is transitive, symmetric and reflexive.

The **equivalence class** of a is the set of all elements that are relation to a. Notation: $[a]_R$

$$[a] = \{x \in A | x\, R\, a\}$$

Step 2

2 of 6

SOLUTION

$$A = \mathbf{Z} \times (\mathbf{Z} - \{0\})$$
$$R = \{((a, b), (c, d)) \in A \times A | ad = bc\}$$

(a) To proof: R is reflexive

PROOF

Let $(a, b) \in \mathbf{Z} \times (\mathbf{Z} - \{0\})$.

By the commutative property of multiplication:

$$ab = ba$$

This then implies that $((a, b), (a, b)) \in R$ and by the definition of reflexive, R is then reflexive.

$\square$

Step 3

3 of 6

(b) To proof: R is symmetric

PROOF

Let $((a, b), (c, d)) \in R$.

By the definition of R:

$$ad = bc$$

By the commutative property of multiplication:

$$da = cb$$

Interchange the left and right side of an equality does not affect the equality:

$$cb = da$$

By the definition of R:

$$((c, d), (a, b)) \in R$$

We then note that $((a, b), (c, d)) \in R$ implies $((c, d), (a, b)) \in R$ and thus R is symmetric.

$\square$

Step 4

4 of 6

(c) We need to list four distinct elements in $[(1, 3)]$

$$[(1, 3)] = \{(a, b) \in A | (a, b)\, R\, (1, 3)\}$$

By the definition of R:

$$\begin{aligned}[(1, 3)] &= \{(a, b) \in A | (a, b)\, R\, (1, 3)\} \\ &= \{(a, b) \in \mathbf{Z} \times (\mathbf{Z} - \{0\}) | a(3) = b(1)\} \\ &= \{(a, b) \in \mathbf{Z} \times (\mathbf{Z} - \{0\}) | 3a = b\}\end{aligned}$$

A few possible choices for a and b are then:

a	b	3a=b	Element of $[(1,3)]$
1	3	$3(1) = 3$ ✓	$(a, b) = (1, 3)$
2	6	$3(2) = 6$ ✓	$(a, b) = (2, 6)$
3	9	$3(3) = 9$ ✓	$(a, b) = (3, 9)$
4	12	$3(4) = 12$ ✓	$(a, b) = (4, 12)$

Thus four distinct elements in $[(1, 3)]$ are then $(1, 3), (2, 6), (3, 9), (4, 12)$.

Step 5

5 of 6

(d) We need to list four distinct elements in $[(2, 5)]$

$$[(2, 5)] = \{(a, b) \in A | (a, b)\, R\, (2, 5)\}$$

By the definition of R:

$$\begin{aligned}[(2, 5)] &= \{(a, b) \in A | (a, b)\, R\, (2, 5)\} \\ &= \{(a, b) \in \mathbf{Z} \times (\mathbf{Z} - \{0\}) | a(5) = b(2)\} \\ &= \{(a, b) \in \mathbf{Z} \times (\mathbf{Z} - \{0\}) | 5a = 2b\}\end{aligned}$$

A few possible choices for a and b are then:

a	b	5a=2b	Element of $[(2,5)]$
2	5	$5(2) = 10 = 2(5)$ ✓	$(a, b) = (2, 5)$
4	10	$5(4) = 20 = 2(10)$ ✓	$(a, b) = (4, 10)$
6	15	$5(6) = 30 = 2(15)$ ✓	$(a, b) = (6, 15)$
8	20	$5(8) = 40 = 2(20)$ ✓	$(a, b) = (8, 20)$

Thus four distinct elements in $[(2, 5)]$ are then $(2, 5), (4, 10), (6, 15), (8, 20)$.

Result

6 of 6

(a) Proof that R is reflexive by using the commutative property of multiplication.

(b) Proof that R is symmetric by using the commutative property of multiplication.

(c) Answers could vary. For example: $(1, 3), (2, 6), (3, 9), (4, 12)$

(d) Answers could vary. For example: $(2, 5), (4, 10), (6, 15), (8, 20)$

Exercise 41 Exercise 43

Exercise 43

Chapter 8, section 8.3, page 523

Discrete Mathematics with Applications
ISBN: 9781337694193

Table of contents

Solution Verified

Step 1 1 of 8

DEFINITIONS

A relation R on a set A is **reflexive** if $(a, a) \in R$ for every element $a \in A$.

A relation R on a set A is **symmetric** if $(b, a) \in R$ whenever $(a, b) \in R$.

A relation R on a set A is **transitive** if $(a, b) \in R$ and $(b, c) \in R$ implies $(a, c) \in R$.

A relation R is an **equivalence relation** if the relation R is transitive, symmetric and reflexive.

The **equivalence class** of a is the set of all elements that are relation to a. Notation: $[a]_R$

$$[a] = \{x \in A | x\, R\, a\}$$

Step 2 2 of 8

SOLUTION

$$A = \mathbb{Z} \times (\mathbb{Z} - \{0\})$$
$$R = \{((a, b), (c, d)) \in A \times A | ad = bc\}$$
$$[(a, b)] + [(c, d)] = [(ad + bc, bd)]$$
$$[(a, b)] \cdot [(c, d)] = [(ac, bd)]$$

(a) To proof: If $[(a, b)] = [(a', b')]$ and $[(c, d)] = [(c', d')]$, then $[(ad + bc, bd)] = [(a'd' + b'c', b'd')]$

PROOF

Let us assume that $[(a, b)] = [(a', b')]$ and $[(c, d)] = [(c', d')]$.

In general: $a \in [a]$ for all $a \in A$:

$$(a, b) \in [(a, b)] = [(a', b')]$$
$$(c, d) \in [(c, d)] = [(c', d')]$$

By the definition of the equivalence class:

$$(a, b)\ R\ (a', b')$$
$$(c, d)\ R\ (c', d')$$

By the definition of R:

$$ab' = ba'$$
$$cd' = dc'$$

Similarly $[(ad + bc, bd)] = [(a'd' + b'c', b'd')]$ will be true if and only if $(ad + bc)(b'd') = (bd)(a'd' + b'c')$ if and only if $ab'dd' + bb'cd' = a'bdd' + bb'cd'$ $$\text{\color{#4257b2}Note: Last equation was obtained using the distributive property on the previous equation \color{default}.}

\\

However, we note that the equation $ab'dd' + bb'cd' = a'bdd' + bb'cd'$ holds, because $ab' = ba'$ and $cd' = dc'$. This then implies that $[(ad + bc, bd)] = [(a'd' + b'c', b'd')]$ is true as well.

□$

Step 3 3 of 8

(b) To proof: If $[(a, b)] = [(a', b')]$ and $[(c, d)] = [(c', d')]$, then $[(ac, bd)] = [(a'c', b'd')]$

PROOF

Let us assume that $[(a, b)] = [(a', b')]$ and $[(c, d)] = [(c', d')]$.

In general: $a \in [a]$ for all $a \in A$:

$$(a, b) \in [(a, b)] = [(a', b')]$$
$$(c, d) \in [(c, d)] = [(c', d')]$$

By the definition of the equivalence class:

$$(a, b)\ R\ (a', b')$$
$$(c, d)\ R\ (c', d')$$

By the definition of R:

$$ab' = ba'$$
$$cd' = dc'$$

Similarly $[(ac, bd)] = [(a'c', b'd')]$ will be true if and only if $(ac)(b'd') = (bd)(a'c')$ if and only if $ab'cd' = a'bc'd$.

However, we note that the equation $ab'cd' = a'bc'd$ holds, because $ab' = ba'$ and $cd' = dc'$. This then implies that $[(ac, bd)] = [(a'c', b'd')]$ is true as well.

□

Step 4 4 of 8

(c) To proof: $[(a, b)] + [(0, 1)] = [(1, 0)] + [(a, b)] = [(a, b)]$ for all $(a, b) \in A$

PROOF

Let $(a, b) \in A$

By the definition of addition $[(a, b)] + [(b, c)] = [(ad + bc, bd)]$:

$$\begin{aligned}[(a, b)] + [(0, 1)] &= [(a(1) + b(0), b(1))] \\ &= [(a + 0, b)] \\ &= [(a, b)]\end{aligned}$$

Similarly, we obtain

$$\begin{aligned}[(0, 1)] + [(a, b)] &= [(0(b) + 1(a), 1(b))] \\ &= [(0 + a, b)] \\ &= [(a, b)]\end{aligned}$$

Thus, we have then shown $[(a, b)] + [(0, 1)] = [(1, 0)] + [(a, b)] = [(a, b)]$.

□

Step 5 5 of 8

(d) We need to find (i, j) such that $[(a, b)] \cdot [(i, j)] = [(i, j)] \cdot [(a, b)] = [(a, b)]$ for all $(a, b) \in A$

Let $(a, b) \in A$

By the definition of multiplication $[(a, b)] \cdot [(c, d)] = [(ac, bd)]$:

$$[(a, b)] \cdot [(i, j)] = [(ai, bj)]$$
$$[(i, j)] \cdot [(a, b)] = [(ia, jb)] = [(ai, bj)]$$

We need both expressions to be equal to $[(a, b)]$:

$$[(ai, bj)] = [(a, b)]$$

We then note that the equation $[(ai, bj)] = [(a, b)]$ holds when $i = j = 1$ and thus an identity element for multiplication is $(1, 1)$.

Step 6 6 of 8

(e) To proof: $[(a, b)] + [(-a, b)] = [(-a, b)] + [(-a, b)] = [(0, 1)]$ for all $(a, b) \in A$

PROOF

Let $(a, b) \in A$

By the definition of addition $[(a, b)] + [(b, c)] = [(ad + bc, bd)]$:

$$\begin{aligned}[(a, b)] + [(-a, b)] &= [(a(b) + b(-a), b(b))] = [(ab - ab, bb)] = [(0, bb)] \\ [(-a, b)] + [(a, b)] &= [((-a)(b) + b(a), b(b))] = [(-ab + ab, bb)] = [(0, bb)]\end{aligned}$$

We then note that $[(a, b)] + [(-a, b)] = [(-a, b)] + [(-a, b)] = [(0, 1)]$ is true if and only if $[(0, bb)] = [(0, 1)]$ is true. However, $[(0, bb)] = [(0, 1)]$ is true if and only if $(0, bb)$ and $(0, 1)$ are related.

$$\begin{aligned}0 \cdot 1 = bb \cdot 0 &\Leftrightarrow (0, bb)\ R\ (0, 1) \\ &\Leftrightarrow [(0, bb)] = [(0, 1)] \\ &\Leftrightarrow [(a, b)] + [(-a, b)] = [(-a, b)] + [(-a, b)] = [(0, 1)].\end{aligned}$$

Thus, we have then shown $[(a, b)] + [(-a, b)] = [(-a, b)] + [(-a, b)] = [(0, 1)]$ is true.

□

Step 7 7 of 8

(f) We need to find (c, d) such that $[(a, b)] \cdot [(c, d)] = [(c, d)] \cdot [(a, b)] = [(1, 1)]$ for all $(a, b) \in A$

Let $(a, b) \in A$

By the definition of multiplication $[(a, b)] \cdot [(c, d)] = [(ac, bd)]$:

$$[(a, b)] \cdot [(c, d)] = [(ac, bd)]$$
$$[(c, d)] \cdot [(a, b)] = [(ca, db)] = [(ac, bd)]$$

We need both expressions to be equal to $[(1, 1)]$:

$$[(ac, bd)] = [(1, 1)]$$

We then note:

$$\begin{aligned}&[(ac, bd)] = [(1, 1)] \text{ is true} \\ \Leftrightarrow &(ac, bd) \text{ and } (1, 1) \text{ are related} \\ \Leftrightarrow &ac \cdot 1 = bd \cdot 1 \qquad \text{Definition of } R \\ \Leftrightarrow &ac = bd\end{aligned}$$

We note that $ac = bd$ is true when $c = b$ and $d = a$ (as $ab = ba$). Thus $(c, d) = (b, a)$ is the inverse for $[(a, b)]$.

Result 8 of 8

(a) Proof that "If $[(a, b)] = [(a', b')]$ and $[(c, d)] = [(c', d')]$, then $[(ad + bc, bd)] = [(a'd' + b'c', b'd')]$" by using the definition of an equivalence class and the property $a \in [a]$ for all $a \in A$.

(b) Proof that "If $[(a, b)] = [(a', b')]$ and $[(c, d)] = [(c', d')]$, then $[(ac, bd)] = [(a'c', b'd')]$" by using the definition of an equivalence class and the property $a \in [a]$ for all $a \in A$.

(c) Proof that $[(a, b)] + [(0, 1)] = [(1, 0)] + [(a, b)] = [(a, b)]$ for all $(a, b) \in A$ by using the definition of addition

(d) $(1, 1)$

(e) Proof that $[(a, b)] + [(-a, b)] = [(-a, b)] + [(-a, b)] = [(0, 1)]$ for all $(a, b) \in A$ by using the definition of addition and the definition of the relation R.

(f) (b, a)

Exercise 42 Exercise 44

Exercise 44

Chapter 8, section 8.3, page 523

Discrete Mathematics with Applications
ISBN: 9781337694193
Table of contents

Solution

Verified

Step 1

1 of 9

DEFINITIONS

A relation R on a set A is **reflexive** if $(a, a) \in R$ for every element $a \in A$.

A relation R on a set A is **symmetric** if $(b, a) \in R$ whenever $(a, b) \in R$

A relation R on a set A is **transitive** if $(a, b) \in R$ and $(b, c) \in R$ implies $(a, c) \in R$

A relation R is an **equivalence relation** if the relation R is transitive, symmetric and reflexive.

The **equivalence class** of a is the set of all elements that are relation to a. Notation: $[a]_R$

$$[a] = \{x \in A | x\ R\ a\}$$

Step 2

2 of 9

SOLUTION

$$A = \mathbf{Z} \times \mathbf{Z}$$
$$R = \{((a, b), (c, d)) \in A \times A | a + d = b + c\}$$

(a) To proof: R is reflexive

PROOF

Let $(a, b) \in A = \mathbf{Z} \times \mathbf{Z}$.

By the commutative property of addition:

$$a + b = b + a$$

However, this then implies that $(a, b)\ R\ (a, b)$ by definition of R.

Since $(a, b)\ R\ (a, b)$ for all $(a, b) \in A$, R is reflexive.

$\square$

Step 3

3 of 9

(b) To proof: R is symmetric

PROOF

Let $((a, b), (c, d)) \in R$.

By the definition of R:

$$a + d = b + c$$

By the commutative property of addition:

$$d + a = c + b$$

Interchanging the left and right side of the equality does not change the equality:

$$c + b = d + a$$

By definition of R:

$$((c, d), (a, b)) \in R$$

Since $((a, b), (c, d)) \in R$ implies $((c, d), (a, b)) \in R$, R is symmetric.

$\square$

Step 4

4 of 9

(c) To proof: R is transitive

PROOF

Let $((a, b), (c, d)) \in R$ and $((c, d), (e, f)) \in R$.

By the definition of R:

$$a + d = b + c$$
$$c + f = d + e$$

Let us solve the first equation to a and the second equation to f:

$$a = b + c - d$$
$$f = d + e - c$$

Let us add the previous two equations:

$$a + f = (b + c - d) + (d + e - c) = b + e$$

By definition of R:

$$((a, b), (e, f)) \in R$$

Since $((a, b), (c, d)) \in R$ and $((c, d), (e, f)) \in R$ implies $((a, b), (e, f)) \in R$, R is transitive.

$\square$

Step 5

5 of 9

(d) Elements in $[(1, 1)]$ are elements $(x, y) \in A$ that are related to $(1, 1)$.

By the definition of R:

$$(a, b) \in [(1, 1)] \Leftrightarrow a + 1 = 1 + b \Leftrightarrow a = b$$

Thus all elements of the form (a, a) with $a \in \mathbf{Z}^+$ are elements in $[(1, 1)]$.

For example, five possible elements of $[(1, 1)]$ are then $(1, 1), (2, 2), (3, 3), (4, 4), (5, 5), \ldots$

Step 6

6 of 9

(e) Elements in $[(3, 1)]$ are elements $(x, y) \in A$ that are related to $(3, 1)$.

By the definition of R:

$$(a, b) \in [(3, 1)] \Leftrightarrow a + 1 = 3 + b \Leftrightarrow a = b + 2$$

Thus all elements of the form $(b + 2, b)$ with $b \in \mathbf{Z}^+$ are elements in $[(3, 1)]$.

For example, five possible elements of $[(3, 1)]$ are then $(3, 1), (4, 2), (5, 3), (6, 4), (7, 5), \ldots$

Step 7

7 of 9

(f) Elements in $[(1, 2)]$ are elements $(x, y) \in A$ that are related to $(1, 2)$.

By the definition of R:

$$(a, b) \in [(1, 2)] \Leftrightarrow a + 2 = 1 + b \Leftrightarrow a + 1 = b$$

Thus all elements of the form $(a, a + 1)$ with $a \in \mathbf{Z}^+$ are elements in $[(1, 2)]$.

For example, five possible elements of $[(1, 2)]$ are then $(1, 2), (2, 3), (3, 4), (4, 5), (5, 6), \ldots$

Step 8

8 of 9

(g) Let $(a, b) \in A$ and let $n = a - b$

If $n = 0$, then the equivalence class is $[(1, 1)] = \{(x, x) \in A \times A\}$ (see part (d)).

If $n < 0$, then the equivalence class is $[(n + 1, 1)] = \{(x + n, x) \in A \times A\}$ (see part (e)).

If $n > 0$, then the equivalence class is $[(1, 1 + n)] = \{(x, x + n) \in A \times A\}$ (see part (f)).

Result

9 of 9

(a) Proof that R is reflexive by using the commutative property of addition and the definition of R

(b) Proof that R is symmetric by using the definition of R and the commutative property of addition

(c) Proof that R is transitive by using the definition of R

(d) Answers could vary. For example: $(1, 1), (2, 2), (3, 3), (4, 4), (5, 5)$

(e) Answers could vary. For example: $(3, 1), (4, 2), (5, 3), (6, 4), (7, 5)$

(f) Answers could vary. For example: $(1, 2), (2, 3), (3, 4), (4, 5), (5, 6)$

(g) The different equivalence classes are $[(1, 1)] = \{(x, x) \in A \times A\}$, $[(1 + n, 1)] = \{(x + n, x) \in A \times A\}$ with $n \in \mathbf{Z}^+$ and $[(1, 1 + n)] = \{(x, x + n) \in A \times A\}$ with $n \in \mathbf{Z}^+$

Exercise 43 Exercise 45

Exercise 45

Chapter 8, section 8.3, page 523

Discrete Mathematics with Applications
ISBN: 9781337694193

Table of contents

Solution

Verified

Step 1

1 of 3

It could happen that for some $x \in A$ there does not exist $y \in A$ such that $x\,R\,y$. In this case, we cannot rely on the argument provided in the exercise prompt to show that R is transitive.

Step 2

2 of 3

Consider the set $A = \{0, 1, 2\}$ and the relation $R = \{(1, 2), (2, 1), (1, 1), (2, 2)\}$. It is clear that R is symmetric and transitive. However, $(0, 0)$ is not in R, so R is not reflexive.

Result

3 of 3

The argument requires that for each $x \in A$ there exists $y \in A$ such that $x\,R\,y$.

Exercise 44 Exercise 46

Exercise 46

Chapter 8, section 8.3, page 523

Discrete Mathematics with Applications
ISBN: 9781337694193

Table of contents

Solution

Verified

Step 1

1 of 2

To prove that R on A is an equivalence relation, it is sufficient to show that R is reflexive, because R is already symmetric and transitive.

Let $x \in A$. By given condition, there exists $y \in A$ such that xRy. So by symmetry of R, yRx. By transitivity, xRx. Thus, we have, for all $x \in A$, xRx. Therefore R is reflexive.

Result

2 of 2

Since R is already symmetric and transitive, we prove that R is reflexive, thereby proving that R is an equivalence relation.

Exercise 45 Exercise 47

Exercise 47

Chapter 8, section 8.3, page 523

Discrete Mathematics with Applications
ISBN: 9781337694193

Table of contents

Solution

Verified

Step 1

1 of 2

(a) The quote states that the name of the song is called "Haddocks' Eyes", which is stated in the 7th line.

(b) The quote states that the name of the song really is "The Aged Aged Man", which is stated in the 10th line.

(c) The quote state that the song is called "Ways and Means", which is stated in the 13th-14th line.

(d) The quote state that the Knight's song is "A-sitting on a gate", which is stated in the 17th line.

(e) The quote was written by Lewis Carroll (stated at the bottom of the quote) and thus the full, legal name is most likely Lewis Carroll.

(f) The quote was named "Through the looking glass" (stated at the bottom of the quote) and thus you are most likely called "Through the looking glass".

(g) We are not supposed to answer this question on paper (thus we are not supposed to write down the answer to this question). However, the question most likely refers to the type of the quote (short story, poem, etc.) and in that case, I would think the quote is a short story.

Result

2 of 2

(a) Haddocks' Eyes

(b) The Aged Aged Man

(c) Ways and Means

(d) A-sitting on a gate

(e) Lewis Carroll

(f) Through the looking glass

(g) Short story

Exercise 46 Exercise 1

Exercise 1

Chapter 10, section 10.1, page 693

Discrete Mathematics with Applications
ISBN: 9780534934935

Table of contents

Solution Verified

Step 1

1 of 8

DEFINITIONS

A **walk** from v to w is a finite sequence of alternatively adjacent vertices and edges of a graph.

A **trail** from v to w is a walk that does not contain a repeated edge.

A **path** from v to w is a trial that does not contain a repeated vertex.

A **closed walk** is a walk that starts and ends at the same vertex.

A **circuit** is a closed walk with at least one edge and no repeated edges.

A **simple circuit** is a circuit with no repeated vertices except for the first and last vertex.

Step 2

2 of 8

SOLUTION

(a)

$$v_0e_1v_1e_2e_3v_2e_4v_3e_5v_4$$

The walk $v_0e_1v_1e_2e_3v_2e_4v_3e_5v_4$ is a **trial**, because we note that the walk does not contain a repeated edge (as the edges are e_1, e_2, e_3 and e_5)

The walk $v_0e_1v_1e_2e_3v_2e_4v_3e_5v_4$ is **not a path**, because we note that the walk contains the vertex v_1 twice.

The walk $v_0e_1v_1e_2e_3v_2e_4v_3e_5v_4$ is **not a closed walk**, because the first vertex v_0 is different from the the last vertex v_4.

The walk $v_0e_1v_1e_2e_3v_2e_4v_3e_5v_4$ is **not a circuit**, because $v_0e_1v_1e_2e_3v_2e_4v_3e_5v_4$ is not a closed walk.

The walk $v_0e_1v_1e_2e_3v_2e_4v_3e_5v_4$ is **not a simple circuit**, because $v_0e_1v_1e_2e_3v_2e_4v_3e_5v_4$ is not a circuit.

The walk $v_0e_1v_1e_2e_3v_2e_4v_3e_5v_4$ is **not just a walk**, because we determined that the walk was a trial.

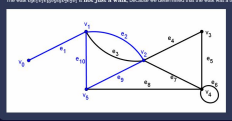

Step 3

3 of 8

(b)

$$v_0e_1v_1e_2e_3v_2e_4v_3e_5v_4e_6v_5e_7v_2e_8v_5e_9v_4$$

The walk $v_0e_1v_1e_2e_3v_2e_4v_3e_5v_4e_6v_5e_7v_2e_8v_5e_9v_4$ is **not a trial**, because we note that the walk contains a repeated edge e_8.

The walk $v_0e_1v_1e_2e_3v_2e_4v_3e_5v_4e_6v_5e_7v_2e_8v_5e_9v_4$ is a **not a path**, because $v_0e_1v_1e_2e_3v_2e_4v_3e_5v_4e_6v_5e_7v_2e_8v_5e_9v_4$ is not a trial.

The walk $v_0e_1v_1e_2e_3v_2e_4v_3e_5v_4e_6v_5e_7v_2e_8v_5e_9v_4$ is **not a closed walk**, because the first vertex v_0 is different from the the last vertex v_4.

The walk $v_0e_1v_1e_2e_3v_2e_4v_3e_5v_4e_6v_5e_7v_2e_8v_5e_9v_4$ is **not a circuit**, because $v_0e_1v_1e_2e_3v_2e_4v_3e_5v_4e_6v_5e_7v_2e_8v_5e_9v_4$ is not a closed walk.

The walk $v_0e_1v_1e_2e_3v_2e_4v_3e_5v_4e_6v_5e_7v_2e_8v_5e_9v_4$ is **not a simple circuit**, because $v_0e_1v_1e_2e_3v_2e_4v_3e_5v_4e_6v_5e_7v_2e_8v_5e_9v_4$ is not a circuit.

The walk $v_0e_1v_1e_2e_3v_2e_4v_3e_5v_4e_6v_5e_7v_2e_8v_5e_9v_4$ is **just a walk**, because the walk is no trial, no path, no closed walk, no circuit and no simple circuit.

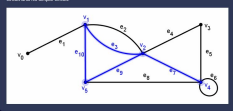

Step 4

4 of 8

(c)

$$v_2$$

The walk v_2 is a **trial**, because we note that the walk does not contain a repeated edge (as there are no edges in the walk)

The walk v_2 is **a path**, because we note that the walk does not contain a repeated vertex (as there is only one vertex).

The walk v_2 is **a closed walk**, because the first vertex v_2 is the same as the last vertex v_2.

The walk v_2 is **not a circuit**, because v_2 does not contain at least one edge.

The walk v_2 is **not a simple circuit**, because v_2 is not a circuit.

The walk v_2 is **not just a walk**, because we determined that the walk was a trial, a path and a closed walk.

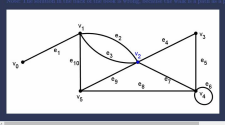

Step 5

5 of 8

(d)

$$v_5e_9v_4e_6v_5$$

Let us first add the edges to the walk, thus if v_5v_4, then we add the edge e_9 between v_5 and v_4 while e_9 needs to be the edge connecting vertices v_5 and v_4.

$$v_5e_9v_4e_6v_5e_7v_2e_8v_5e_9v_4$$

The walk $v_5e_9v_4e_6v_5e_7v_2e_8v_5e_9v_4$ is a **trial**, because we note that the walk does not contain a repeated edge (as the edges are e_9, e_6, e_7, e_8 and e_9)

The walk $v_5e_9v_4e_6v_5e_7v_2e_8v_5e_9v_4$ is **not a path**, because we note that the walk contains a repeated vertex v_5.

The walk $v_5e_9v_4e_6v_5e_7v_2e_8v_5e_9v_4$ is a **closed walk**, because the first vertex v_5 is the same as the last vertex v_5.

The walk $v_5e_9v_4e_6v_5e_7v_2e_8v_5e_9v_4$ is a **circuit**, because $v_5e_9v_4e_6v_5e_7v_2e_8v_5e_9v_4$ contains at least one edge and has no repeated edges (as the edges are e_9, e_6, e_7, e_8 and e_9).

The walk $v_5e_9v_4e_6v_5e_7v_2e_8v_5e_9v_4$ is **not a simple circuit**, because the vertex v_5 is mentioned twice in the walk.

The walk $v_5e_9v_4e_6v_5e_7v_2e_8v_5e_9v_4$ is **not just a walk**, because we determined that the walk was a trial, a closed walk and a circuit.

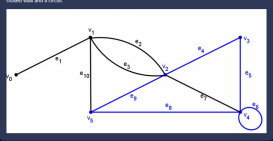

Step 6

6 of 8

(e)

$$v_3e_5v_4e_9v_5e_6v_4e_5v_3$$

Let us first add the edges to the walk, thus if v_3v_2, then we add the edge e_5 between v_3 and v_2 while e_5 needs to be the edge connecting vertices v_3 and v_2.

$$v_3e_5v_4e_9v_5e_6v_4e_5v_3e_4v_1e_2v_2e_3v_1e_1v_0e_{10}v_1e_2v_2e_3v_1e_1v_0$$

The walk $v_3e_5v_4e_9v_5e_6v_4e_5v_3e_4v_1e_2v_2e_3v_1e_1v_0e_{10}v_1e_2v_2e_3v_1e_1v_0$ is **not a trial**, because we note that the walk contains a repeated edge e_2.

The walk $v_3e_5v_4e_9v_5e_6v_4e_5v_3e_4v_1e_2v_2e_3v_1e_1v_0e_{10}v_1e_2v_2e_3v_1e_1v_0$ is **not a path**, because the walk is not a trial.

The walk $v_3e_5v_4e_9v_5e_6v_4e_5v_3e_4v_1e_2v_2e_3v_1e_1v_0e_{10}v_1e_2v_2e_3v_1e_1v_0$ is a **closed walk**, because the first vertex v_3 is the same as the last vertex v_3.

The walk $v_3e_5v_4e_9v_5e_6v_4e_5v_3e_4v_1e_2v_2e_3v_1e_1v_0e_{10}v_1e_2v_2e_3v_1e_1v_0$ is **not a circuit**, because we note that the walk contains a repeated edge e_2.

The walk $v_3e_5v_4e_9v_5e_6v_4e_5v_3e_4v_1e_2v_2e_3v_1e_1v_0e_{10}v_1e_2v_2e_3v_1e_1v_0$ is **not a simple circuit**, because the walk is not a circuit.

The walk $v_3e_5v_4e_9v_5e_6v_4e_5v_3e_4v_1e_2v_2e_3v_1e_1v_0e_{10}v_1e_2v_2e_3v_1e_1v_0$ is **not just a walk**, because we determined that the walk was a closed walk.

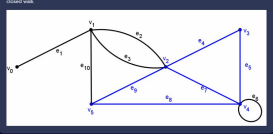

Step 7

7 of 8

(f)

$$v_2e_2v_3e_3$$

Let us first add the vertices to the walk, thus if e_3 is an edge from v_3 to v_2, then we add v_3 before e_3 and v_2 after e_3.

$$v_2e_2v_3e_3v_2e_2v_1e_3v_3$$

The walk $v_2e_2v_3e_3v_2e_2v_1e_3v_3$ is a **trial**, because we note that the walk contains no repeated edge (as the edges are e_2, e_3, e_2 and e_3)

The walk $v_2e_2v_3e_3v_2e_2v_1e_3v_3$ is a **path**, because the walk is a trial and the walk contains no repeated vertices (as the vertices are v_2, e_2, v_3, e_3, v_2 and e_2)

The walk $v_2e_2v_3e_3v_2e_2v_1e_3v_3$ is **not a closed walk**, because the first vertex v_2 is different from the last vertex v_3.

The walk $v_2e_2v_3e_3v_2e_2v_1e_3v_3$ is **not a circuit**, because the walk is not a closed walk.

The walk $v_2e_2v_3e_3v_2e_2v_1e_3v_3$ is **not a simple circuit**, because the walk is not a circuit.

The walk $v_2e_2v_3e_3v_2e_2v_1e_3v_3$ is **not just a walk**, because we determined that the walk was a trial and a path.

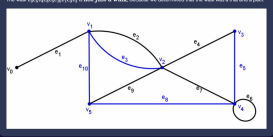

Result

8 of 8

(a) Trial

(b) Just a walk

(c) Trial, path and closed walk

(d) Trial, closed walk and circuit

(e) Closed walk

(f) Trial and path

Exercise 34 Exercise 2

Exercise 2

Chapter 10, section 10.1, page #93

Discrete Mathematics with Applications
ISBN: 9780534493165
Table of contents

Solution

Verified

Step 1

1 of 6

DEFINITIONS

A **walk** from v to w is a finite sequence of alternatively adjacent vertices and edges of a graph.

A **trail** from v to w is a walk that does not contain a repeated edge.

A **path** from v to w is a trail that does not contain a repeated vertex.

A **closed walk** is a walk that starts and ends at the same vertex.

A **circuit** is a closed walk with at least one edge and no repeated edges.

A **simple circuit** is a circuit with no repeated vertices except for the first and last vertex.

Step 2

2 of 6

SOLUTION

(a)

$$v_1e_1v_2e_2v_3e_3v_4e_4v_3e_5v_2e_6v_4e_7v_5e_8v_1e_9v_5e_{10}v_1e_1v_2$$

The walk $v_1e_1v_2e_2v_3e_3v_4e_4v_3e_5v_2e_6v_4e_7v_5e_8v_1e_9v_5e_{10}v_1e_1v_2$ is **not a trail**, because we note that the walk contains the edge e_3 twice.

The walk $v_1e_1v_2e_2v_3e_3v_4e_4v_3e_5v_2e_6v_4e_7v_5e_8v_1e_9v_5e_{10}v_1e_1v_2$ is **not a path**, because the walk is not a trail.

The walk $v_1e_1v_2e_2v_3e_3v_4e_4v_3e_5v_2e_6v_4e_7v_5e_8v_1e_9v_5e_{10}v_1e_1v_2$ is **not a closed walk**, because the first vertex v_1 is different from the the last vertex v_2.

The walk $v_1e_1v_2e_2v_3e_3v_4e_4v_3e_5v_2e_6v_4e_7v_5e_8v_1e_9v_5e_{10}v_1e_1v_2$ is **not a circuit**, because the walk is not a closed walk.

The walk $v_1e_1v_2e_2v_3e_3v_4e_4v_3e_5v_2e_6v_4e_7v_5e_8v_1e_9v_5e_{10}v_1e_1v_2$ is **not a simple circuit**, because the walk is not a circuit.

The walk $v_1e_1v_2e_2v_3e_3v_4e_4v_3e_5v_2e_6v_4e_7v_5e_8v_1e_9v_5e_{10}v_1e_1v_2$ is **just a walk**, because the walk was not a trailnor a path nor a closed walk nor a circuit nor a simple circuit.

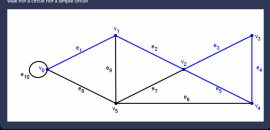

Step 3

3 of 6

(b)

$$v_1e_1v_4e_9v_5$$

Let us first add the edges to the walk, thus if v_1e_1, then we add the edge e_9 between v_1 and v_5 while e_1 needs to be the edge connecting vertices v_1 and v_2

$$v_1e_1v_2e_2v_3e_3v_4e_4v_3e_5v_2e_6v_4e_7v_5e_8v_1e_9v_5$$

The walk $v_1e_1v_2e_2v_3e_3v_4e_4v_3e_5v_2e_6v_4e_7v_5e_8v_1e_9v_5$ is **a trail**, because we note that the walk contains no repeated edges (as the only edges are e_3, e_4, e_5 and e_7)

The walk $v_1e_1v_2e_2v_3e_3v_4e_4v_3e_5v_2e_6v_4e_7v_5e_8v_1e_9v_5$ is **a not a path**, because the walk contains a repeated vertex v_3.

The walk $v_1e_1v_2e_2v_3e_3v_4e_4v_3e_5v_2e_6v_4e_7v_5e_8v_1e_9v_5$ is **a closed walk**, because the first vertex v_1 is the same as the the last vertex v_5.

The walk $v_1e_1v_2e_2v_3e_3v_4e_4v_3e_5v_2e_6v_4e_7v_5e_8v_1e_9v_5$ is **a circuit**, because the walk is a closed walk and the walk contains no repeated edges.

The walk $v_1e_1v_2e_2v_3e_3v_4e_4v_3e_5v_2e_6v_4e_7v_5e_8v_1e_9v_5$ is **a simple circuit**, because the walk is a circuit and the walk contains no repeated vertices (excluding the first and last vertex).

The walk $v_1e_1v_2e_2v_3e_3v_4e_4v_3e_5v_2e_6v_4e_7v_5e_8v_1e_9v_5$ is **not just a walk**, because the walk is a trial, a closed walk, a circuit and a simple circuit.

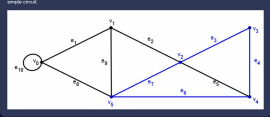

Step 4

4 of 6

(c)

$$v_1e_1v_2e_2v_3e_3v_4$$

Let us first add the edges to the walk, thus if v_1e_1, then we add the edge e_1 between v_1 and v_2 while e_1 needs to be the edge connecting vertices v_1 and v_2

$$v_1e_1v_2e_2v_3e_3v_4e_4v_3e_5v_2e_6v_4e_7v_5e_8v_1e_9v_5e_{10}v_1e_1v_2$$

The walk $v_1e_1v_2e_2v_3e_3v_4e_4v_3e_5v_2e_6v_4e_7v_5e_8v_1e_9v_5e_{10}v_1e_1v_2$ is **not a trail**, because we note that the walk contains the edge e_3 twice.

The walk $v_1e_1v_2e_2v_3e_3v_4e_4v_3e_5v_2e_6v_4e_7v_5e_8v_1e_9v_5e_{10}v_1e_1v_2$ is **not a path**, because the walk is not a trail.

The walk $v_1e_1v_2e_2v_3e_3v_4e_4v_3e_5v_2e_6v_4e_7v_5e_8v_1e_9v_5e_{10}v_1e_1v_2$ is **a closed walk**, because the first vertex v_1 is the same as the the last vertex v_2.

The walk $v_1e_1v_2e_2v_3e_3v_4e_4v_3e_5v_2e_6v_4e_7v_5e_8v_1e_9v_5e_{10}v_1e_1v_2$ is **not a circuit**, because the walk contains the edge e_3 twice.

The walk $v_1e_1v_2e_2v_3e_3v_4e_4v_3e_5v_2e_6v_4e_7v_5e_8v_1e_9v_5e_{10}v_1e_1v_2$ is **not a simple circuit**, because the walk is not a circuit.

The walk $v_1e_1v_2e_2v_3e_3v_4e_4v_3e_5v_2e_6v_4e_7v_5e_8v_1e_9v_5e_{10}v_1e_1v_2$ is **not just a walk**, because the walk is a closed walk.

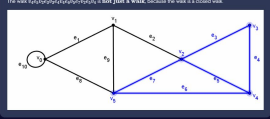

Step 5

5 of 6

(d)

$$v_1e_1v_2e_2v_3e_3v_4$$

Let us first add the edges to the walk, thus if v_1e_1, then we add the edge e_1 between v_1 and v_2 while e_1 needs to be the edge connecting vertices v_1 and v_2

$$v_1e_1v_2e_2v_3e_3v_4e_4v_3e_5v_2e_6v_4e_7v_5e_8v_1e_9v_5$$

The walk $v_1e_1v_2e_2v_3e_3v_4e_4v_3e_5v_2e_6v_4e_7v_5e_8v_1e_9v_5$ is a **trail**, because we note that the walk does not contain a repeated edge (as the edges are e_3, e_4, e_5, e_6, e_7 and e_8)

The walk $v_1e_1v_2e_2v_3e_3v_4e_4v_3e_5v_2e_6v_4e_7v_5e_8v_1e_9v_5$ is **not a path**, because we note that the walk contains a repeated vertex v_3

The walk $v_1e_1v_2e_2v_3e_3v_4e_4v_3e_5v_2e_6v_4e_7v_5e_8v_1e_9v_5$ is **a closed walk**, because the first vertex v_1 is the same as the last vertex v_5

The walk $v_1e_1v_2e_2v_3e_3v_4e_4v_3e_5v_2e_6v_4e_7v_5e_8v_1e_9v_5$ is **a circuit**, because the walk is a closed walk, contains at least one edge and has no repeated edges (as the edges are e_3, e_4, e_5, e_6 and e_8)

The walk $v_1e_1v_2e_2v_3e_3v_4e_4v_3e_5v_2e_6v_4e_7v_5e_8v_1e_9v_5$ is **not a simple circuit**, because the vertex v_3 is mentioned three times in the walk.

The walk $v_1e_1v_2e_2v_3e_3v_4e_4v_3e_5v_2e_6v_4e_7v_5e_8v_1e_9v_5$ is **not just a walk**, because we determined that the walk was a trial, a closed walk and a circuit.

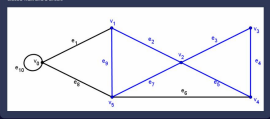

Step 6

6 of 6

(e)

$$v_1e_1v_2e_2v_3$$

Let us first add the edges to the walk, thus if v_1e_1, then we add the edge e_1 between v_1 and v_2 while e_1 needs to be the edge connecting vertices v_1 and v_2

$$v_1e_1v_2e_2v_3e_3v_4e_4v_3e_5v_2e_6v_4e_7v_5e_8v_1e_9v_5$$

The walk $v_1e_1v_2e_2v_3e_3v_4e_4v_3e_5v_2e_6v_4e_7v_5e_8v_1e_9v_5$ is **a trail**, because we note that the walk contains no repeated edge (as the edges are e_2, e_3, e_4, e_5, e_6, e_7 and e_8)

The walk $v_1e_1v_2e_2v_3e_3v_4e_4v_3e_5v_2e_6v_4e_7v_5e_8v_1e_9v_5$ is **not a path**, because the walk contains the vertex v_3 twice.

The walk $v_1e_1v_2e_2v_3e_3v_4e_4v_3e_5v_2e_6v_4e_7v_5e_8v_1e_9v_5$ is **not a closed walk**, because the first vertex v_1 is different from the last vertex v_5

The walk $v_1e_1v_2e_2v_3e_3v_4e_4v_3e_5v_2e_6v_4e_7v_5e_8v_1e_9v_5$ is **not a circuit**, because the walk is not a closed walk.

The walk $v_1e_1v_2e_2v_3e_3v_4e_4v_3e_5v_2e_6v_4e_7v_5e_8v_1e_9v_5$ is **not a simple circuit**, because the walk is not a circuit.

The walk $v_1e_1v_2e_2v_3e_3v_4e_4v_3e_5v_2e_6v_4e_7v_5e_8v_1e_9v_5$ is **not just a walk**, because we determined that the walk was a trial.

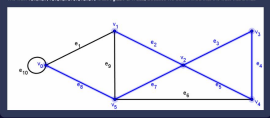

Step 7

7 of 6

(f)

$$v_1e_1v_2e_2$$

Let us first add the edges to the walk, thus if v_1e_1, then we add the edge e_1 between v_1 and v_2 while e_1 needs to be the edge connecting vertices v_1 and v_2

$$v_1e_1v_2e_2v_3e_3v_4$$

The walk $v_1e_1v_2e_2v_3e_3v_4$ is **a trail**, because we note that the walk contains no repeated edge (as the edges are e_2, e_3 and e_4)

The walk $v_1e_1v_2e_2v_3e_3v_4$ is **a path**, because the walk contains no vertices twice (as the vertices are v_1, v_2, v_3 and v_4)

The walk $v_1e_1v_2e_2v_3e_3v_4$ is **not a closed walk**, because the first vertex v_1 is different from the last vertex v_4

The walk $v_1e_1v_2e_2v_3e_3v_4$ is **not a circuit**, because the walk is not a closed walk

The walk $v_1e_1v_2e_2v_3e_3v_4$ is **not a simple circuit**, because the walk is not a circuit.

The walk $v_1e_1v_2e_2v_3e_3v_4$ is **not just a walk**, because we determined that the walk was a trial and a path

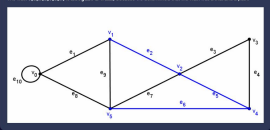

Result

8 of 6

(a) Just a walk

(b) Trail, closed walk, circuit, and simple circuit

(c) Closed walk

(d) Trail, closed walk and circuit

(e) Trail

(f) Trail and path

Exercise 1 Exercise 3

Exercise 3

Chapter 10, section 10.1, page 693

Discrete Mathematics with Applications
ISBN: 9781337694193

Table of contents

Solution

Verified

Step 1

1 of 2

(a)\ No, the given walk can not be written unambiguously as $v_1v_2v_1$ since both walks $v_1e_1v_2e_2v_1$ and $v_1e_2v_2e_1v_1$ are denoted by the notation $v_1v_2v_1$. And so, the given notation can be any one of these two.

(b)\ No, the given walk can not be written unambiguously as e_1e_2 since both walks $v_1e_1v_2e_2v_1$ and $v_2e_1v_1e_2v_2$ can be denoted by the notation e_1e_2. And so, the given notation can be any one of these two.

Result

2 of 2

(a)\ No

(b)\ No

Exercise 2 Exercise 4

Exercise 4

Chapter 10, section 10.1, page 693

Discrete Mathematics with Applications
ISBN: 9781337694193
Table of contents

Solution Verified

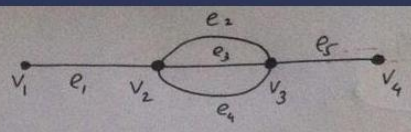

a) There are three paths from v_1 to v_4.

i) $v_1 e_1 v_2 e_2 v_3 e_5 v_4$

ii) $v_1 e_1 v_2 e_3 v_3 e_5 v_4$

iii) $v_1 e_1 v_2 e_4 v_3 e_5 v_4$

b) There are nine trails from v_1 to v_4.

~~i) $v_1 e_1 v_2$~~ The above three paths i), ii), iii).

iv) $v_1 e_1 v_2 e_2 v_3 e_4 v_2 e_3 v_3 e_5 v_4$

v) $v_1 e_1 v_2 e_2 v_3 e_3 v_2 e_4 v_3 e_5 v_4$

vi) $v_1 e_1 v_2 e_3 v_3 e_2 v_2 e_4 v_3 e_5 v_4$

vii) $v_1 e_1 v_2 e_3 v_3 e_4 v_2 e_2 v_3 e_5 v_4$

viii) $v_1 e_1 v_2 e_4 v_3 e_2 v_2 e_3 v_3 e_5 v_4$

ix) $v_1 e_1 v_2 e_4 v_3 e_3 v_2 e_2 v_3 e_5 v_4$

c) There are infinitely many walks from v_1 to v_4.

Reason is, we can walk any number of times from v_2 to v_3, then go to v_4.

Exercise 3 Exercise 5

Exercise 5

Chapter 10, section 10.1, page 693

Discrete Mathematics with Applications
ISBN: 9781337694193

Table of contents

Solution

Verified

Step 1

1 of 2

a) A path is a walk from a to c with no repeating edges. a to c can follow 4 different paths:

ae_1be_5c

ae_2be_5c

ae_3be_5c

ae_4be_5c

b) A trail is a walk from a to c with no repeated vertices. a to c can follow $4! + 4$ different trails. (4 different paths, $4!$ different trails). $4! + 4 = 28$

c) There are ∞ different walks from a to c, because you can repeat the edges and vertices taken to get there an infinite amount of times. For example, you can take a down edge 1 to b, back down edge 1 to a, back down edge 1 to b, and then take edge 5 to c.

Result

2 of 2

a) 4

b) 28

c) Infinitely many

Exercise 4 Exercise 6

Exercise 6

Chapter 10, section 10.1, page 693

Discrete Mathematics with Applications
ISBN: 9781337694193

Table of contents

Solution

Verified

Step 1

1 of 4

a. Every edge is a bridge.

Step 2

2 of 4

b. Bridges are v_1v_2, v_3v_4 and v_7v_8.

Step 3

3 of 4

c. Bridges are v_2v_3, v_6v_7, v_7v_8 and v_9v_{10}

Result

4 of 4

a. Every edge

b. v_1v_2, v_3v_4 and v_7v_8.

c. v_2v_3, v_6v_7, v_7v_8 and v_9v_{10}

Exercise 5 Exercise 7

Exercise 7

Chapter 10, section 10.1, page 694

Discrete Mathematics with Applications
ISBN: 9781337694193
Table of contents

Solution

Verified

Step 1

1 of 3

(a)\ Let's consider a graph with $n+1$ vertices $v_1, v_2, \cdots, v_n v_{n+1}$, with n edges e_j, $1 \leq j \leq n$ where these edges has end points v_j, v_{j+1} as shown below.

We can clearly see from the graph that removal of just any one edge will disconnect the graph.

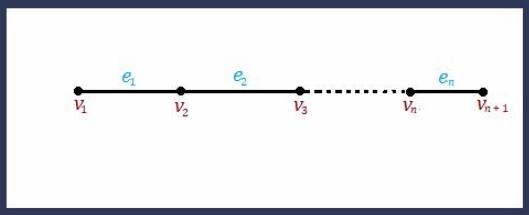

Step 2

2 of 3

(b)\ Let's consider a closed graph with n vertices $v_1, v_2, \cdots, v_{n-1}, v_n$, with n edges e_j, $1 \leq j \leq n$ where these edges has end points as shown below.

We can clearly see from the graph that removal of just any one edge will not disconnect the graph.

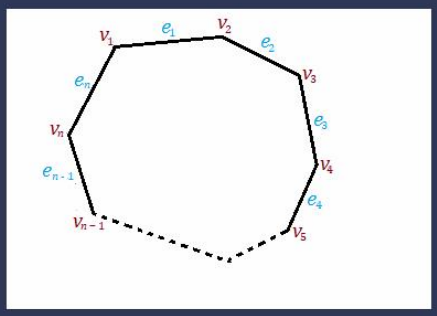

Result

3 of 3

The respective graphs are drawn.

Exercise 6 Exercise 8

Exercise 8

Chapter 10, section 10.1, page 694

Discrete Mathematics with Applications
ISBN: 9781337694193

Table of contents

Solution

Verified

Step 1

1 of 6

DEFINITIONS

A **connected component** is a part of the graph where every pair of elements in this part is connected by a walk.

Step 2

2 of 6

SOLUTION

(a) Each connected component contains all vertices that are connected by some walk.

We then note that the connected components are:

- a, b, c and d are all connected by some walk, but not connected to any other vertices, thus $\{a, b, c, d\}$ is a connected component.
- e is not connected to any other vertices by a walk, thus $\{e\}$ is a connected component.
- f, g and h are all connected by some walk, but not connected to any other vertices, thus $\{f, g, h\}$ is a connected component.

We then note that there are 3 connected components: $\{a, b, c, d\}, \{e\}, \{f, g, h\}$

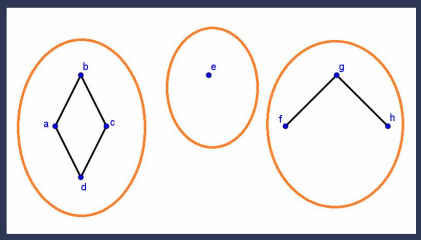

Step 3

3 of 6

(b) Each connected component contains all vertices that are connected by some walk.

We then note that the connected components are:

- u, w and y are all connected by some walk, but not connected to any other vertices, thus $\{u, w, y\}$ is a connected component.
- v, x and z are all connected by some walk, but not connected to any other vertices, thus $\{v, x, z\}$ is a connected component.

We then note that there are 2 connected components: $\{u, w, y\}, \{v, x, z\}$

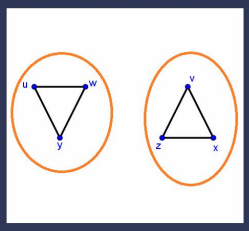

Step 4

4 of 6

(c) Each connected component contains all vertices that are connected by some walk.

We then note that the connected components are:

- a, b, d and e are all connected by some walk, but not connected to any other vertices, thus $\{a, b, d, e\}$ is a connected component.
- c, h, i and j are all connected by some walk, but not connected to any other vertices, thus $\{c, h, i, j\}$ is a connected component.
- f and g are connected by some walk, but not connected to any other vertices, thus $\{f, g\}$ is a connected component.

We then note that there are 3 connected components: $\{a, b, d, e\}, \{c, h, i, j\}, \{f, g\}$

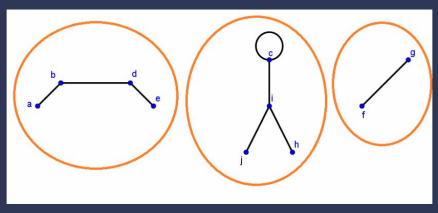

Step 5

5 of 6

(d) Each connected component contains all vertices that are connected by some walk.

We then note that the connected components are:

- v_1 and v_3 are connected by some walk, but not connected to any other vertices, thus $\{v_1, v_3\}$ is a connected component.
- v_2 and v_4 are connected by some walk, but not connected to any other vertices, thus $\{v_2, v_4\}$ is a connected component.

We then note that there are 2 connected components: $\{v_1, v_3\}, \{v_2, v_4\}$

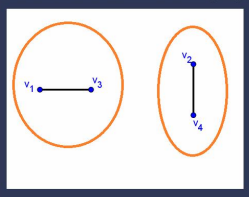

Result

6 of 6

(a) 3

(b) 2

(c) 3

(d) 2

Exercise 7 Exercise 9

Exercise 9

Chapter 10, section 10.1, page 694

Discrete Mathematics with Applications
ISBN: 9781337694193

Table of contents

Solutions

Verified

Solution A Solution B

Step 1

1 of 5

DEFINITIONS

An **Euler circuit** is a circuit that contains every edge of the graph.

A connected graph has an Euler circuit if and only if each of the vertices has an even degree.

Step 2

2 of 5

SOLUTION

(a) G is a connected graph with five vertices of degrees 2, 2, 3, 3, 4.

A connected graph has an Euler circuit if and only if each of the vertices has an even degree.

Since two of the vertices have an odd degree, the graph cannot contain an Euler circuit.

Step 3

3 of 5

(b) G is a connected graph with five vertices of degrees 2, 2, 4, 4, 6

A connected graph has an Euler circuit if and only if each of the vertices has an even degree.

Since all vertices of G have an even degree, the graph contains an Euler circuit.

Step 4

4 of 5

(c) G is a graph with five vertices of degrees 2, 2, 4, 4, 6

In this case, the graph G is not necessarily a connected graph. If G is a connected graph, then we know that an Euler circuit exists by part (b).

If G is not a connected graph, then the graph cannot contain an Euler circuit as there does not exist a walk between every pair of vertices (and thus no circuit either). For example, the graph below is a graph with 5 vertices of degree 2, 2, 4, 4, 6 that does not contain an Euler circuit as it is not a connected graph.

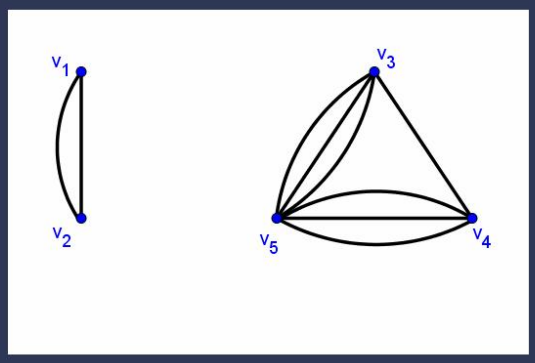

Result

5 of 5

(a) No

(b) Yes

(c) Not necessarily

Exercise 8 Exercise 10

Exercise 9

Chapter 10, section 10.1, page 694

Discrete Mathematics with Applications
ISBN: 9781337694193

Table of contents

Solutions

Verified

Solution A Solution B

Step 1

1 of 4

$a)$ No

The graph has a vertex of odd degree.

Step 2

2 of 4

$b)$ Yes

It's a connected graph with all vertices of even degree.

Step 3

3 of 4

c) Not necessarily.

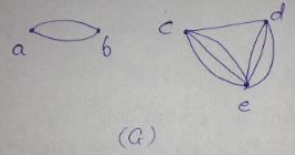

(G)

Being disconnected, the graph doesn't have an Euler circuit.

Result

4 of 4

a) No

b) Yes

c) Not necessarily

Exercise 8 Exercise 10

Exercise 10

Chapter 10, section 10.1, page 694

Discrete Mathematics with Applications
ISBN: 9781337694193

Table of contents

Solution

Verified

Step 1

1 of 3

DEFINITIONS

An **Euler circuit** is a circuit that contains every edge of the graph.

A connected graph has an Euler circuit if and only if each of the vertices has an even degree.

Step 2

2 of 3

SOLUTION

If G is a connected graph, then we know that an Euler circuit exists by part (b).

If G is not a connected graph, then the graph cannot contain an Euler circuit as there does not exist a walk between every pair of vertices (and thus no circuit either).

For example, the graph below is a graph with 5 vertices of degree 2, 2, 4, 4, 6 that does not contain an Euler circuit as it is not a connected graph. However, we note that the degree of every vertex is even.

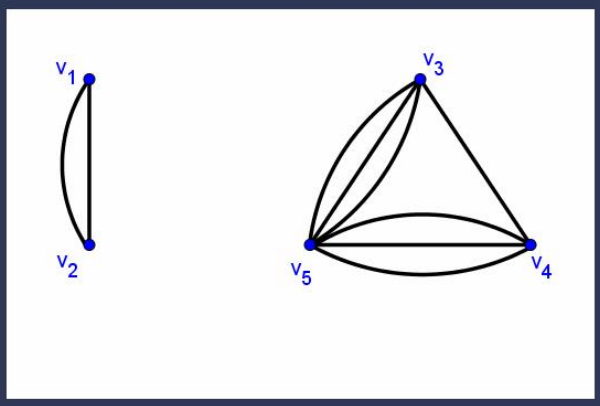

Result

3 of 3

Answers could vary

Exercise 9 Exercise 11

Exercise 11

Chapter 10, section 10.1, page 694

Discrete Mathematics with Applications
ISBN: 9781337694193

Table of contents

Solution

Verified

Step 1

1 of 4

DEFINITIONS

An **Euler circuit** is a circuit that contains every edge of the graph.

A connected graph has an Euler circuit if and only if each of the vertices has an even degree.

Step 2

2 of 4

SOLUTION

Let us first create a graph that corresponds with the given figure. Each region is represented by a vertex and each bridge between two regions is represented by an edge between two corresponding vertices.

We then obtain the following graph.

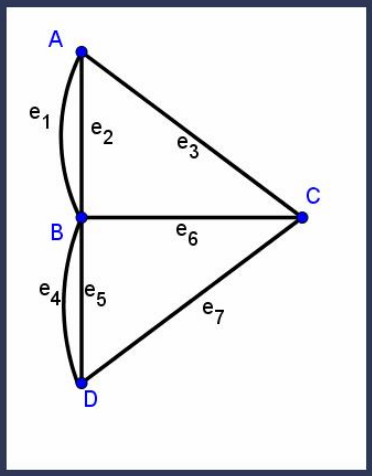

Step 3

3 of 4

We need to cross each bridge exactly twice.

Even though the graph will not contain an Euler circuit (as C has degree 3 and a graph with a vertex of odd degree does not have an Euler circuit), the graph will contain a walk that contains every bridge exactly twice (as this would double the number of edges between every pair of vertices and thus all vertices in the connected graph then have an even degree).

For example: $e_7e_5e_6e_7e_4e_5e_4e_1e_3e_6e_2e_1e_2e_3$ is a walk of the graph that contains every bridge (edge) exactly twice.

Result

4 of 4

Yes

Exercise 10 Exercise 12

Exercise 12

Chapter 10, section 10.1, page 694

Discrete Mathematics with Applications
ISBN: 9781337694193

Table of contents

Solution

Verified

Step 1

1 of 3

DEFINITIONS

The **degree of a vertex** is the number of edges that connect to the vertex.

Note: A loop at a vertex counts as two edges. An **Euler circuit** is a circuit that contains every edge of t

Step 2

2 of 3

SOLUTION

We note that the graph is connected, because there is a walk between every pair of vertices.

Let us next determine the degree of every vertex, which is the number of edges that connect to the vertex.

$$\begin{aligned} \deg(v_1) &= 2 \\ \deg(v_2) &= 4 \\ \deg(v_3) &= 2 \\ \deg(v_4) &= 4 \\ \deg(v_5) &= 4 \end{aligned}$$

We note that the degree of every vertex is even.

A connected graph has an Euler circuit if and only if each of the vertices has an even degree. Since the graph is a connected graph with every vertex of even degree, there exists an Euler circuit of the given graph.

For example, $e_1e_2e_3e_4e_5e_6e_7e_8$ is an Euler circuit that starts and ends in v_1.

Result

3 of 3

Euler circuit exists

For example, $e_1e_2e_3e_4e_5e_6e_7e_8$ is an Euler circuit.

Exercise 11 Exercise 13

Exercise 13

Chapter 10, section 10.1, page 694

Discrete Mathematics with Applications

ISBN: 9781337694193

Table of contents

Solution

Verified

Step 1

1 of 2

The graph does not have an Euler circuit because a vertex v_1 has odd degree $(deg(v_1) = 5)$.

Result

2 of 2

Explore the solution Does not have Euler circuit

Exercise 12 Exercise 14

Exercise 14

Chapter 10, section 10.1, page 694

Discrete Mathematics with Applications

ISBN: 9781337694193

Table of contents

Solution

Verified

Step 1

1 of 2

The graph has an Euler circuit (because it is connected and every vertex has a positive even degree).

An Euler circuit is given by

$$iabihbchgcdgfdefi$$

Result

2 of 2

It has an Euler circuit Explore the solution

Exercise 13 Exercise 15

Exercise 15

Chapter 10, section 10.1, page 694

Discrete Mathematics with Applications

ISBN: 9781337694193

Table of contents

Solution

Verified

Step 1

1 of 2

The graph has an Euler circuit because it is connected and every vertex has a positive even degree.

An Euler circuit is give by $utsrzyxwvuszuywu$

Result

2 of 2

The graph has an Euler circuit Explore the solution

Exercise 14 Exercise 16

Exercise 16

Chapter 10, section 10.1, page 694

Discrete Mathematics with Applications

ISBN: 9781337694193

Table of contents

Solution

Verified

Step 1

1 of 2

The graph has no Euler circuit because the graph is disconnected as there is no path from vertex v_0 to vertex v_1.

Result

2 of 2

The graph has no Euler circuit Explore the solution

Exercise 15 Exercise 17

Exercise 17

Chapter 10, section 10.1, page 694

Discrete Mathematics with Applications

ISBN: 9781337694193

Table of contents

Solution

Verified

Step 1

1 of 2

The graph has no Euler circuit because it has a vertex C which has odd degree $(deg(C) = 3)$

Result

2 of 2

The graph has no Euler circuit Explore the solution

Exercise 16 Exercise 18

Exercise 18

Chapter 10, section 10.1, page 694

Discrete Mathematics with Applications
ISBN: 9781337694193
Table of contents

Solution

Verified

Step 1

1 of 2

Yes, it is possible. To show how can be done, let's draw the city map as a graph as shown in the figure below.

Now, we know that, An Euler circuit starts and ends at the same vertex, such that it uses every vertex at least once, and every edge exactly once.

All we need to do now is to find an Euler Circuit. Let's consider the Euler Circuit $ABDEACDA$. By using this path, we can clearly see that a person walk around the city starting and ending at the same point A and crossing each bridge exactly once.

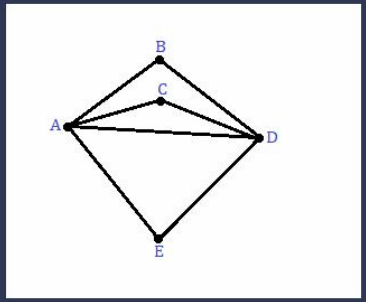

Result

2 of 2

Yes. Use the path, $ABDEACDA$

Exercise 17 Exercise 19

Exercise 19

Chapter 10, section 10.1, page 695

Discrete Mathematics with Applications

ISBN: 9781337694193

Table of contents

Solution

Verified

Step 1

1 of 2

The graph has an Euler path from u to w because the graph is connected, both the vertices have odd degree and the other vertices have positive even degree.

An Euler path is given by $uv_1v_0v_7uv_2v_3v_4v_2v_6v_4wv_6v_5w$

Result

2 of 2

There is an Euler path from u to w Explore the solution

Exercise 18 Exercise 20

Exercise 20

Chapter 10, section 10.1, page 695

Discrete Mathematics with Applications

ISBN: 9781337694193

Table of contents

Solution

Verified

Step 1

1 of 2

The graph has no Euler path from u to w because it is connected, u and w have odd degrees but the vertex e does not have an even degree.

Result

2 of 2

There is no Euler path from u to w Explore the solution

Exercise 19 Exercise 21

Exercise 21

Chapter 10, section 10.1, page 695

Discrete Mathematics with Applications

ISBN: 9781337694193

Table of contents

Solution

Verified

Step 1

1 of 2

The graph has an Euler path, which is given by $uv_0v_7v_6v_3v_2v_1uv_3v_4v_6wv_4v_5w$

The graph is connected, degrees of u and w are odd and the degrees of the other vertices are even, that is why the graph has an Euler path.

Result

2 of 2

The graph has an Euler path from u to w Explore the solution

Exercise 20 Exercise 22

Exercise 22

Chapter 10, section 10.1, page 695

Discrete Mathematics with Applications
ISBN: 9781337694193

Table of contents

Solution

Verified

Step 1

1 of 2

Yes, it is possible. To show how can be done, let's draw the floor plan of the house as a graph as shown in the figure below, where the edges indicate the openings between the rooms.

Now, we know that, $\text{\color{#4257b2}An Euler trail from A to B starts at A and ends at B, such that it passes through every vertex at least once, and every edge exactly once. \\ \color{default} All we need to do now is to find an Euler trail from A to E. Since, each vertex of this graph has an even degree except for A and E, each of which has degree 1, by Corollary 10.1.5, there is an Euler trail from A to E. One such trail is given by $$AHGBCDGFE$$ \This path gives gives a way to enter the house in room A, travel through every interior doorway of the house exactly once, and exit out of room E.}$

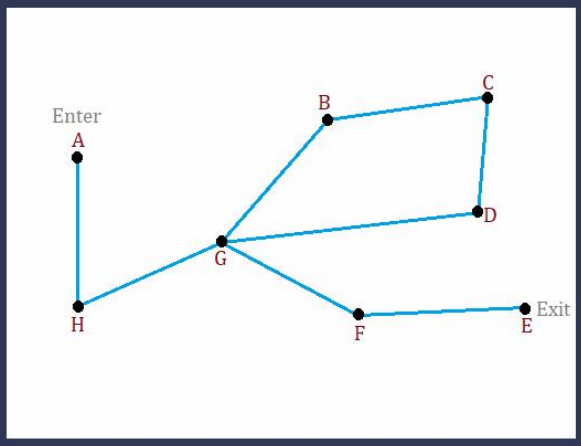

Result

2 of 2

Yes, by following the Euler trail $AHGBCDGFE$.

Exercise 21 Exercise 23

Exercise 23

Chapter 10, section 10.1, page 695

Discrete Mathematics with Applications
ISBN: 9781337694193

Table of contents

Solution

Verified

Step 1

1 of 5

DEFINITIONS

Graph H is a **subgraph** of graph G if and only if every vertex of H is also a vertex of G and every edge of H is also an edge in G (with same endpoints).

Step 2

2 of 5

SOLUTION

(a) We note that the given graph contains two vertices v_1, v_2 and two edges e_1, e_2.

All subgraphs of the given graph contain at least one of the two vertices in the given graph and contains 0, 1 or 2 of the edges in the given graph.

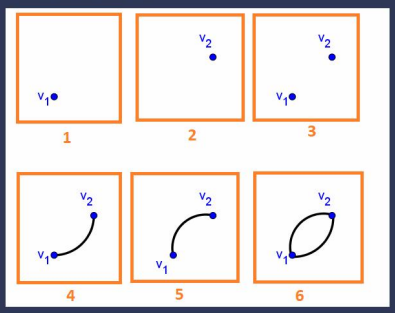

Step 3

3 of 5

(b) We note that the given graph contains two vertices v_0, v_1 and two edges.

All subgraphs of the given graph contain at least one of the two vertices in the given graph and contains 0, 1 or 2 of the edges in the given graph.

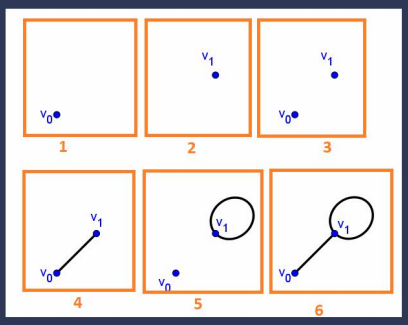

Step 4

4 of 5

(c) We note that the given graph contains three vertices v_1, v_2, v_3 and three edges.

All subgraphs of the given graph contain at least one of the three vertices in the given graph and contains 0, 1, 2 or 3 of the edges in the given graph.

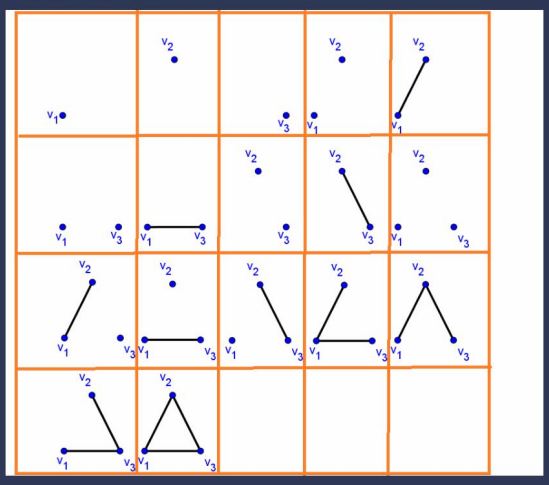

Result

5 of 5

(a) There are 6 subgraphs

(b) There are 6 subgraphs

(c) There are 17 subgraphs

Exercise 22 Exercise 24

Exercise 24

Chapter 10, section 10.1, page 695

Discrete Mathematics with Applications
ISBN: 9781337694193
Table of contents

Solution

Verified

Step 1

1 of 4

DEFINITIONS

The **complementary graph** $\overline{G}$ of a graph G contains the same vertices as G and contains all edges not in G.

Step 2

2 of 4

SOLUTION

(a) The given graph contains vertices v_1, v_2, v_3, v_4, which implies that the complement of the graph needs to contain the vertices v_1, v_2, v_3, v_4 as well.

The complement of the graph also contains an edge between every pair of vertices that are not connected by an edge in the given graph.

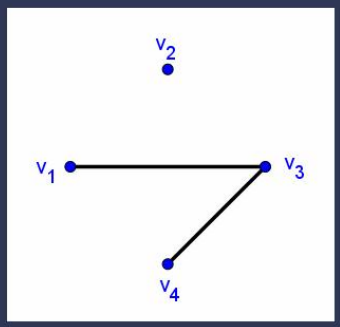

Step 3

3 of 4

(b) The given graph contains vertices v_1, v_2, v_3, v_4, which implies that the complement of the graph needs to contain the vertices v_1, v_2, v_3, v_4 as well.

The complement of the graph also contains an edge between every pair of vertices that are not connected by an edge in the given graph.

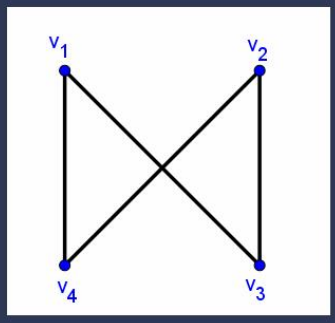

Result

4 of 4

(a) Graph with vertices v_1, v_2, v_3, v_4 and two edges.

(b) Graph with vertices v_1, v_2, v_3, v_4 and four edges.

Exercise 23 Exercise 25

Exercise 25

Chapter 10, section 10.1, page 695

Discrete Mathematics with Applications
ISBN: 9781337694193
Table of contents

Solution

Verified

Step 1

1 of 4

DEFINITIONS

The **complementary graph** $\overline{G}$ of a graph G contains the same vertices as G and contains all edges not in G.

A **complete graph** K_n $(n \geq 1)$ is a simple graph with n vertices and an edge between every pair of vertices.

A **complete bipartite graph** $K_{m,n}$ with a set M of m vertices and another set N with n vertices, while there are edges between every vertex in M and every vertex of N.

Step 2

2 of 4

SOLUTION

(a) K_4 contains 4 vertices v_1, v_2, v_3, v_4, while there is an edge between every pair of vertices.

The complement of K_4 then contains the 4 vertices v_1, v_2, v_3, v_4 as well.

The complement of the graph also contains an edge between every pair of vertices that are not connected by an edge in the given graph. However, K_4 contains an edge between every pair of vertices and thus the complement of K_4 does not contain any edge between a pair of vertices.

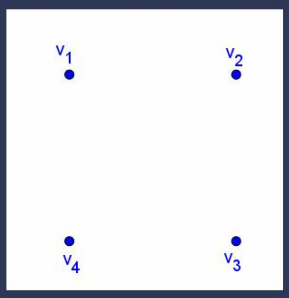

Step 3

3 of 4

(b) $K_{3,2}$ is a graph with a set M of 3 vertices m_1, m_2, m_3 and a set N of 2 vertices n_1, n_2 such that every vertex in M is connected to every vertex in N by an edge (while there are no edges among elements of M nor among elements of N).

The given graph contains vertices m_1, m_2, m_3, n_1, n_2, which implies that the complement of the graph needs to contain the vertices m_1, m_2, m_3, n_1, n_2 as well.

The complement of the graph also contains an edge between every pair of vertices that are not connected by an edge in the given graph. Since there is an edge in $K_{3,2}$ between every vertex in M and every vertex in N, the complement of $K_{3,2}$ contains no edges between a vertex of M and a vertex of N. Since there are no edges in $K_{3,2}$ among vertices of M nor among vertices of N, there is an edge in the complement of $K_{3,2}$ between every pair of vertices in M and between every pair of vertices in N.

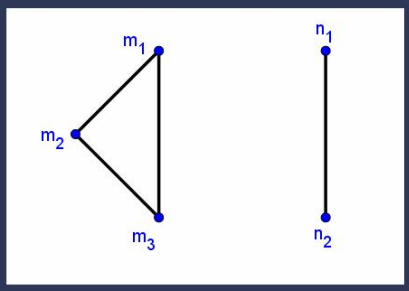

Result

4 of 4

(a) Graph with vertices v_1, v_2, v_3, v_4 and no edges.

(b) Graph with vertices m_1, m_2, m_3, n_1, n_2 and four edges.

Exercise 24 Exercise 26

Exercise 26

Chapter 10, section 10.1, page 695

Discrete Mathematics with Applications
ISBN: 9781337694193
Table of contents

Solution

Verified

Step 1

1 of 4

DEFINITIONS

The **complementary graph** $\overline{G}$ of a graph G contains the same vertices as G and contains all edges not in G.

Step 2

2 of 4

SOLUTION

(a) We have been given 5 people A, B, C, D, E. Let us then represent the situation by a graph with 5 vertices named A, B, C, D and E.

The following pairs of people are acquainted with each other: A and C, A and D, B and C, C and D, C and E. We represent this in the graph by an edge between two people if the two people are acquainted.

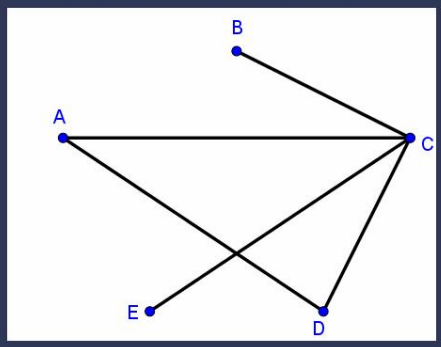

Step 3

3 of 4

(b) The graph representing the relation among people who are not acquainted is then given by the complementary graph of the graph in part (a).

The given graph contains vertices A, B, C, D, E, which implies that the complement of the graph needs to contain the vertices A, B, C, D, E as well.

The complement of the graph also contains an edge between every pair of vertices that are not connected by an edge in the graph of part (a).

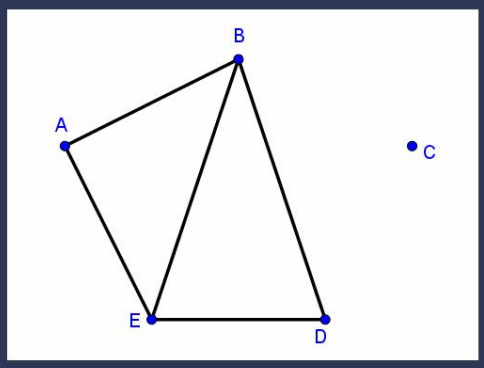

Result

4 of 4

(a) Graph with vertices A, B, C, D, E and an edge between two vertices if the two corresponding people are acquainted.

(b) Graph with vertices A, B, C, D, E and an edge between two vertices if the two corresponding people are not acquainted.

Exercise 25 Exercise 27

Exercise 27

Chapter 10, section 10.1, page 695

Discrete Mathematics with Applications
ISBN: 9781337694193

Table of contents

Solution

Verified

Step 1

1 of 3

DEFINITIONS

A **complete graph** K_n $(n \geq 1)$ is a simple graph with n vertices and an edge between every pair of vertices.

The **complementary graph** $\overline{G}$ of a graph G contains the same vertices as G and contains all edges not in G.

Step 2

2 of 3

SOLUTION

Let us consider a graph G and let G' be the complementary graph of G.

Let G contain n vertices.

The graphs G and G' then contains the n same vertices, while G' contains all edges not in G. However, if we consider the combined graph $G \cup G'$ which contains the same vertices and all edges in either G or G'. We then note that $G \cup G'$ needs to contain an edge between every pair of vertices (as either the edge is an edge in G or the edge is an edge in G' as it was not an edge in G) and thus $G \cup G'$ needs to be the complete graph K_n.

However, we derived that K_n contains $\frac{n(n-1)}{2}$ edges in a previous exercise and thus the sum of the number of edges in G and the number of edges in G' needs to be equal to $\frac{n(n-1)}{2}$.

$$\text{Number of edges of } G + \text{Number of edges of } G' = \frac{n(n-1)}{2}$$

Result

3 of 3

$$\text{Number of edges of } G + \text{Number of edges of } G' = \frac{n(n-1)}{2}$$

Exercise 26 Exercise 28

Exercise 28

Chapter 10, section 10.1, page 695

Discrete Mathematics with Applications
ISBN: 9781337694193

Table of contents

Solution

Verified

Step 1

1 of 3

DEFINITIONS

The **complementary graph** $\overline{G}$ of a graph G contains the same vertices as G and contains all edges not in G.

Step 2

2 of 3

SOLUTION

Given: A party has at least two people

To proof: There are at least two mutual acquaintances or at least two mutual strangers.

PROOF

Let a party contains n people $A_1, A_2, A_3, \ldots, A_n$ with $n \geq 2$.

Let G be the graph containing n vertices $A_1, A_2, A_3, \ldots, A_n$ with an edge between A_i and A_j if A_i and A_j are acquainted.

Let us consider the two people A_1 and A_2.

- If there is an edge between A_1 and A_2 in G, then A_1 and A_2 are mutual acquaintances and thus there are at least two mutual acquaintances at the party.
- If there is no edge between A_1 and A_2 in G, then there is an edge between A_1 and A_2 in the complementary graph G'. The complementary graph G' has the same vertices as G and an edge between A_i and A_j if A_i and A_j are strangers (or not acquainted). This then implies that A_1 and E_2 are mutual strangers and thus there are at least two mutual strangers at the party.

$\square$

Result

3 of 3

Proof that there are at least two mutual acquaintances or at least two mutual strangers by creating a graph G that describes the acquaintance relationship and using that an edge between two people is either an edge in G or an edge in the complementary graph G'.

Exercise 27 Exercise 29

Exercise 29

Chapter 10, section 10.1, page 696

Discrete Mathematics with Applications
ISBN: 9781337694193

Table of contents

Solution

Verified

Step 1

1 of 2

Just see in the diagram how you can start from a point and travel in such a way that you cover all the vertices exactly once and come back to the same vertex back without repeating edges and leaving the unnecessary edges.

A Hamiltonian circuit for the graph is given by $v_0v_7v_6v_2v_5v_4v_3v_1v_0$

Result

2 of 2

$$v_0v_7v_6v_2v_5v_4v_3v_1v_0$$

Exercise 28 Exercise 30

Exercise 30

Chapter 10, section 10.1, page 696

Discrete Mathematics with Applications
ISBN: 9781337694193

Table of contents

Solution

Verified

Step 1

1 of 2

A Hamiltonian circuit is given by $abghifcdejkla$

Just see in the diagram how you can start from a point and travel in such a way that you cover all the vertices exactly once and come back to the same vertex back without repeating edges and leaving the unnecessary edges.

Result

2 of 2

$$abghifcdejkla$$

Exercise 29 Exercise 31

Exercise 31

Chapter 10, section 10.1, page 696

Discrete Mathematics with Applications
ISBN: 9781337694193

Table of contents

Solution

Verified

Step 1

1 of 2

Given a graph G, form the subgraph H' consisting all vertices of degree 2 and their incident edges.

If H' contains a vertex with degree > 2, then G has no Hamiltonian circuit.

If H' contains a circuit, but $V(H') \neq V(G)$, then G has no Hamiltonian circuit.

If G has a Hamiltonian circuit H (which we consider as a subgraph of G), then it must contain H' as a subgraph, since a Hamiltonian circuit must include every edge incident on a vertex of degree 2.

If H' has a vertex of degree > 2, then so does H, which is impossible since H is a circuit.

Suppose $V(H') \neq V(G)$, and let v be a vertex in G not in H'. Then there must exist an edge in the Hamiltonian circuit joining v to some vertex v' in H'. This shows that the degree of v' in H' (hence in H) is > 2, which is again impossible since H is a circuit.

Result

2 of 2

The subgraph H' contains the vertex c and the edges bc, dc, gc, fc. Hence c has degree 4 in H', so G has no Hamiltonian circuit.

Exercise 30 Exercise 32

Exercise 32

Chapter 10, section 10.1, page 696

Discrete Mathematics with Applications
ISBN: 9781337694193

Table of contents

Solution

Verified

Step 1

1 of 2

Given a graph G, form the subgraph H' consisting all vertices of degree 2 and their incident edges.

If H' contains a vertex with degree > 2, then G has no Hamiltonian circuit.

If H' contains a circuit, but $V(H') \neq V(G)$, then G has no Hamiltonian circuit.

If G has a Hamiltonian circuit H (which we consider as a subgraph of G), then it must contain H' as a subgraph, since a Hamiltonian circuit must include every edge incident on a vertex of degree 2.

If H' has a vertex of degree > 2, then so does H, which is impossible since H is a circuit.

Suppose $V(H') \neq V(G)$, and let v be a vertex in G not in H'. Then there must exist an edge in the Hamiltonian circuit joining v to some vertex v' in H'. This shows that the degree of v' in H' (hence in H) is > 2, which is again impossible since H is a circuit.

Result

2 of 2

The subgraph H' contains the circuit $bcde$, but does not contain the vertex i. Hence G has no Hamiltonian circuit.

Exercise 31 Exercise 33

Exercise 33

Chapter 10, section 10.1, page 696

Discrete Mathematics with Applications
ISBN: 9781337694193

Table of contents

Solution

Verified

Step 1

1 of 2

Given a graph G, form the subgraph H' consisting all vertices of degree 2 and their incident edges.

If H' contains a vertex with degree > 2, then G has no Hamiltonian circuit.

If H' contains a circuit, but $V(H') \neq V(G)$, then G has no Hamiltonian circuit.

If G has a Hamiltonian circuit H (which we consider as a subgraph of G), then it must contain H' as a subgraph, since a Hamiltonian circuit must include every edge incident on a vertex of degree 2.

If H' has a vertex of degree > 2, then so does H, which is impossible since H is a circuit.

Suppose $V(H') \neq V(G)$, and let v be a vertex in G not in H'. Then there must exist an edge in the Hamiltonian circuit joining v to some vertex v' in H'. This shows that the degree of v' in H' (hence in H) is > 2, which is again impossible since H is a circuit.

Result

2 of 2

The subgraph H' contains the vertex B and edges AB, FB, EB, CB. Hence B has degree 4 in H' so G has no Hamiltonian circuit.

Exercise 32 Exercise 34

Exercise 34

Chapter 10, section 10.1, page 696

Discrete Mathematics with Applications

ISBN: 9781337694193

Table of contents

Solution

Verified

Step 1

1 of 2

Given a graph G, form the subgraph H' consisting all vertices of degree 2 and their incident edges.

If H' contains a vertex with degree > 2, then G has no Hamiltonian circuit.

If H' contains a circuit, but $V(H') \neq V(G)$, then G has no Hamiltonian circuit.

If G has a Hamiltonian circuit H (which we consider as a subgraph of G), then it must contain H' as a subgraph, since a Hamiltonian circuit must include every edge incident on a vertex of degree 2.

If H' has a vertex of degree > 2, then so does H, which is impossible since H is a circuit.

Suppose $V(H') \neq V(G)$, and let v be a vertex in G not in H'. Then there must exist an edge in the Hamiltonian circuit joining v to some vertex v' in H'. This shows that the degree of v' in H' (hence in H) is > 2, which is again impossible since H is a circuit.

Result

2 of 2

In this case $H' = G$, which clearly has vertices of degree 3. Hence G has no Hamiltonian circuit.

Exercise 33 Exercise 35

Exercise 35

Chapter 10, section 10.1, page 696

Discrete Mathematics with Applications

ISBN: 9781337694193

Table of contents

Solution

Verified

Step 1

1 of 2

Just see in the diagram how you can start from a point and travel in such a way that you cover all the vertices exactly once and come back to the same vertex back without repeating edges and leaving the unnecessary edges.

It has Hamiltonian circuit, which is given by $abcdefga$

Result

2 of 2

$$abcdefga$$

Exercise 34 Exercise 36

Exercise 36

Chapter 10, section 10.1, page 696

Discrete Mathematics with Applications
ISBN: 9781337694193

Table of contents

Solution

Verified

Step 1

1 of 2

Just see in the diagram how you can start from a point and travel in such a way that you cover all the vertices exactly once and come back to the same vertex back without repeating edges and leaving the unnecessary edges.

The graph has a Hamiltonian circuit given by

$$v_0v_1v_2v_6v_5v_4v_7v_3v_0$$

Result

2 of 2

$$v_0v_1v_2v_6v_5v_4v_7v_3v_0$$

Exercise 35 Exercise 37

Exercise 37

Chapter 10, section 10.1, page 696

Discrete Mathematics with Applications
ISBN: 9781337694193

Table of contents

Solution

Verified

Step 1

1 of 2

Any Hamiltonian circuit H must contain the circuit $abcd$. Since this is not all of G, the Hamiltonian circuit H must contain an edge from a, b, c or d to another vertex. Therefore H contains a vertex of degree > 2 which is impossible. Hence G has no Hamiltonian circuit.

Result

2 of 2

The graph G has no Hamiltonian circuit.

Exercise 36 Exercise 38

Exercise 38

Chapter 10, section 10.1, page 696

Discrete Mathematics with Applications
ISBN: 9781337694193
Table of contents

Solution

Verified

Step 1

1 of 3

DEFINITIONS

The **degree of a vertex** is the number of edges that connect to the vertex.

Note: A loop at a vertex counts as two edges. An **Euler circuit** is a circuit that contains every edge of t

Step 2

2 of 3

SOLUTION

Two examples of graphs with Euler circuits but no Hamilton circuits are given in the image below.

The two graphs below have an Euler circuit, because the graphs are connected and each vertex has an even degree. For example, $bacbdeb$ is an Euler circuit in the first example and $ghifglkjg$ is an Euler circuit in the second example.

The first graph does not contain a Hamilton circuit, because any circuit will need to contain the vertex b. However, since a Hamilton circuit needs to pass through every vertex, all 4 edges connecting to the vertex b need to be included in the Hamilton circuit as well (since a, c, d and e need to be in the circuit). This then implies that vertex b would have degree 4 in the Hamilton circuit, while a Hamilton circuit has degree 2 at every vertex and thus such a Hamilton circuit cannot exist.

The second graph does not contain a Hamilton circuit, because any circuit will need to contain the vertex g. However, since a Hamilton circuit needs to pass through every vertex, all 4 edges connecting to the vertex g need to be included in the Hamilton circuit as well (since f, h, j and l need to be in the circuit). This then implies that vertex g would have degree 4 in the Hamilton circuit, while a Hamilton circuit has degree 2 at every vertex and thus such a Hamilton circuit cannot exist.

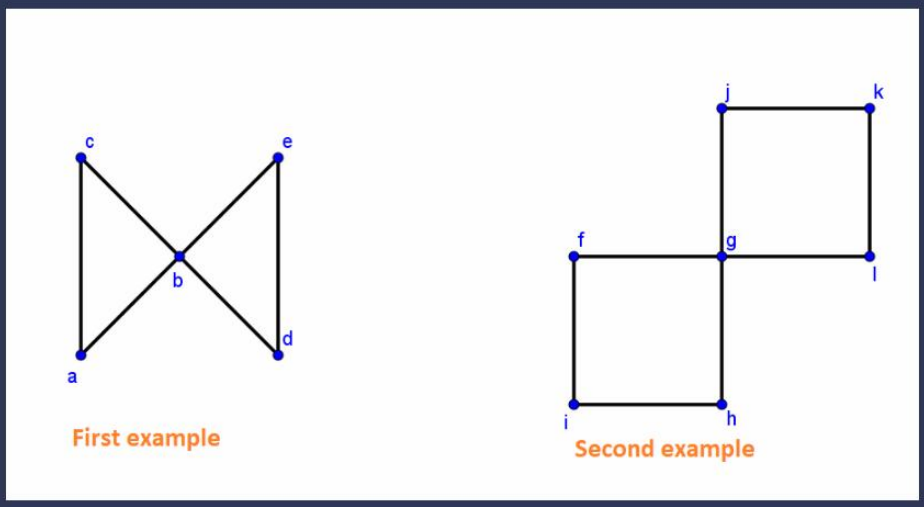

Result

3 of 3

Answers could vary

Exercise 37 Exercise 39

Exercise 39

Chapter 10, section 10.1, page 696

Discrete Mathematics with Applications
ISBN: 9781337694193
Table of contents

Solution Verified

Step 1

1 of 3

DEFINITIONS

The **degree of a vertex** is the number of edges that connect to the vertex.

Note: A loop at a vertex counts as two edges. An **Euler circuit** is a circuit that contains every edge of t

Step 2

2 of 3

SOLUTION

Two examples of graphs with Hamilton circuits but no Euler circuits are given in the image below.

The two graphs below do not contain an Euler circuit, because they each contain at least one vertex with an odd degree. All four vertices in the first example have degree 3, while vertex h and e in the second example have degree 3.

The first graph contains a Hamilton circuit, because $abcda$ is such a possible Hamilton circuit (a circuit that passes through every vertex exactly once).

The second graph contains a Hamilton circuit, because $eghife$ is such a possible Hamilton circuit (a circuit that passes through every vertex exactly once).

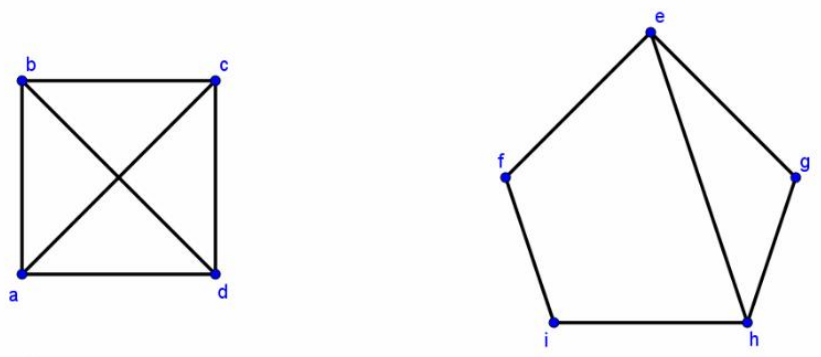

Result

3 of 3

Answers could vary

Exercise 38 Exercise 40

Exercise 40

Chapter 10, section 10.1, page 696

Discrete Mathematics with Applications
ISBN: 9781337694193
Table of contents

Solution

Verified

Step 1

1 of 3

DEFINITIONS

The **degree of a vertex** is the number of edges that connect to the vertex.

Note: A loop at a vertex counts as two edges. An **Euler circuit** is a circuit that contains every edge of t

Step 2

2 of 3

SOLUTION

Two examples of graphs with Euler circuits and Hamilton circuits are given in the image below.

The two graphs below contain an Euler circuit, because they are both connected graphs that contain vertices with even degrees only. For example, $abcda$ is an Euler circuit in the first graph and $eghife$ is an Euler circuit in the second graph.

The first graph contains a Hamilton circuit, because $abcda$ is such a possible Hamilton circuit (a circuit that passes through every vertex exactly once).

The second graph contains a Hamilton circuit, because $eghife$ is such a possible Hamilton circuit (a circuit that passes through every vertex exactly once).

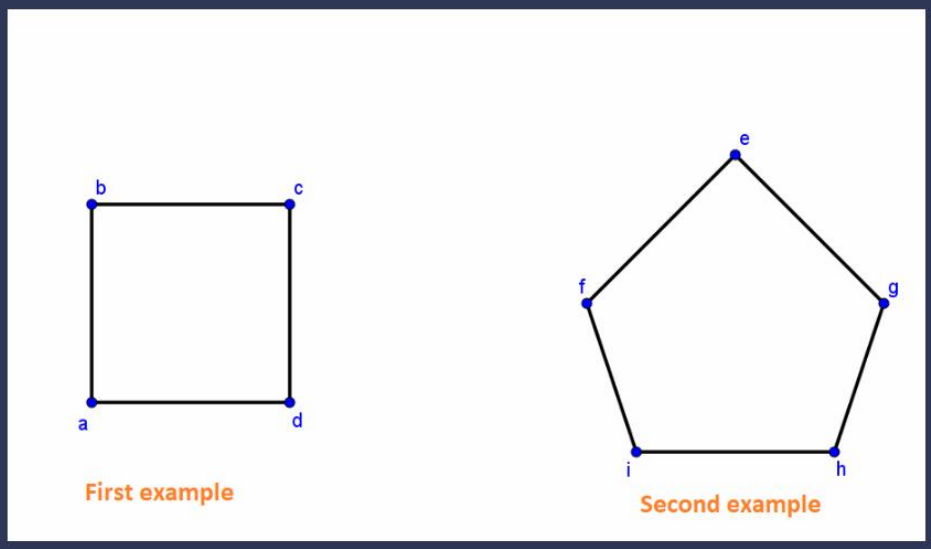

Result

3 of 3

Answers could vary

Exercise 39 Exercise 41

Exercise 41

Chapter 10, section 10.1, page 696

Discrete Mathematics with Applications
ISBN: 9781337694193
Table of contents

Solution

Verified

Step 1

1 of 3

DEFINITIONS

The **degree of a vertex** is the number of edges that connect to the vertex.

Note: A loop at a vertex counts as two edges. **An Euler circuit** is a circuit that contains every edge of t

Step 2

2 of 3

SOLUTION

Two examples of graphs with Euler circuits and Hamilton circuits are given in the image below. We also note that the Euler circuits and Hamilton circuits are not the same.

The two graphs below contain an Euler circuit, because they are both connected graphs that contain vertices with even degrees only. For example, $e_1e_2e_5e_6e_3e_4$ is an Euler circuit in the first graph and $e_7e_8e_9e_{13}e_{12}e_{10}e_{11}$ is an Euler circuit in the second graph.

The first graph contains a Hamilton circuit, because $e_1e_2e_3e_4$ is such a possible Hamilton circuit (a circuit that passes through every vertex exactly once).

The second graph contains a Hamilton circuit, because $e_7e_8e_9e_{10}e_{11}$ is such a possible Hamilton circuit (a circuit that passes through every vertex exactly once).

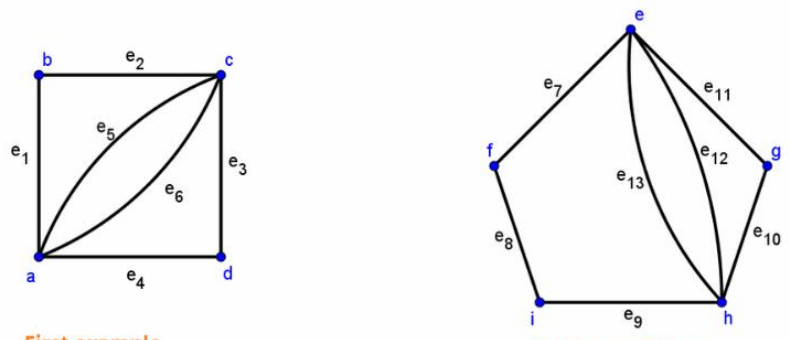

First example

Second example

Result

3 of 3

Answers could vary

Exercise 40 Exercise 42

Exercise 42

Chapter 10, section 10.1, page 696

Discrete Mathematics with Applications
ISBN: 9781337694193
Table of contents

Solution Verified

Step 1

1 of 4

DEFINITIONS

The **degree of a vertex** is the number of edges that connect to the vertex.

Note: A loop at a vertex counts as two edges. **An Euler circuit** is a circuit that contains every edge of t

Step 2

2 of 4

SOLUTION

Let us first represent the given map by a graph, where each vertex is one of the cities in the map. We draw an edge between every pair of vertices and label the edge with the distance between the two cities.

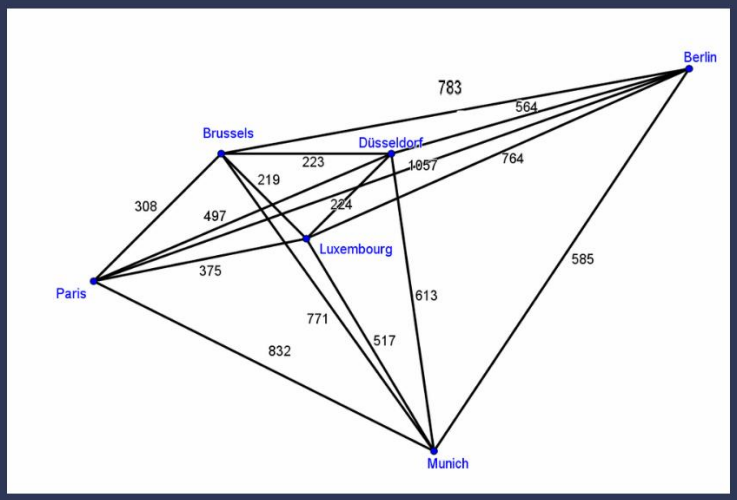

Step 3

3 of 4

Let us next determine all Hamilton Circuits starting and ending in Brussels and the corresponding distances (A=Brussels, B=Berlin, D=Düsselfdorf, L=Luxembourg, M=Munich, P=Paris).

I will only list the Hamilton circuits that make sense.
• It does not make sense to go from Brussels to Munich or from Munich to Brussels, as they lie on opposite sides of the map.
• It does not make sense to go from Paris to Berlin or from Berlin to Paris, as they lie on opposite sides of the map.
• It does not make sense to change in the opposite direction on the next move: move from left to right and then back to the left on the next turn; or move from right to left and then back to the right on the next turn.

Note: If $abcdefa$ is a Hamilton circuit of minimized distance, then $afedcba$ is also a Hamilton circuit of minimized distance.

Hamilton circuit	Distance
$ABDLMPA$	$783+564+224+517+832+308=3228$
$ABDMLPA$	$783+564+613+517+375+308=3160$
$ABMDLPA$	$783+585+613+224+375+308=2888$
$ADBMLPA$	$223+564+585+517+375+308=2572$
$ALDBMPA$	$219+224+564+585+832+308=2732$
$ALMBDPA$	$219+517+585+564+497+308=2690$

We then note that $ADBMLPA$ appears to be the shortest Hamilton circuit with a distance of 2572, which is thus the Hamilton circuit Brussels-Düsseldorf-Berlin-Munich-Luxembourg-Paris-Brussels.

Result

4 of 4

Brussels-D"usseldorf-Berlin-Munich-Luxembourg-Paris-Brussels

Exercise 41 Exercise 43

Exercise 43

Chapter 10, section 10.1, page 696

Discrete Mathematics with Applications
ISBN: 9781337694193

Table of contents

Solution

Verified

Step 1

1 of 4

DEFINITIONS

A **walk** from v to w is a finite sequence of alternatively adjacent vertices and edges of a graph.

Step 2

2 of 4

SOLUTION

(a) To proof: If a walk in a graph contains a repeated edge, then the walk contains a repeated vertex.

PROOF BY CASES

Let G be a graph and let W be a walk in the graph G such that W contains some repeated edge e.

Let u and v be the endpoints of the edge e.

If $u = v$, then the edge e is a loop at vertex u and thus u is then a repeated vertex, which would complete the proof. Let us then assume that $u \neq v$.

First case W contains two copies of uev or W contains two copies of veu

In this case both u and v are repeated vertices.

Second case W contains $ueveu$ or $veuev$

If W contains $ueveu$, then u is a repeated edge and if W contains $veuev$, then v is a repeated vertex.

Third case W contains uev both veu, separated by at least one edge.

In this case both u and v are repeated vertices.

Conclusion We found repeated vertices in each case and thus W always contains a repeated vertex.

$\square$

Step 3

3 of 4

(b) The contrapositive of a true statement is true as well.

The contrapositive of the statement in part (a) is: "If a walk in a graph does not contain a repeated vertex, then the walk does not contain a repeated edge".

This then implies that a walk with no repeated vertex has no repeated edge.

Result

4 of 4

(a) Proof "If a walk in a graph contains a repeated edge, then the walk contains a repeated vertex." by using a proof by cases.

(b) Contrapositive of part (a)

Exercise 42 Exercise 44

Exercise 44

Chapter 10, section 10.1, page 697

Discrete Mathematics with Applications
ISBN: 9781337694193

Table of contents

Solution

Verified

Step 1

1 of 2

Solution:

Proof of Lemma 10.1.1 (a)

We assume that G is a connected graph. We observe an arbitrary two distinct vertices of G. Let's denote them u and v. To solve the task we need to prove that those two vertices can be connected by a path, i.e. by a walk with no repeated vertex or an edge.

We know that G is a connected graph, which means that there is a walk from u to v. If that walk has no repeated vertex we stop there. According to the result of exercise 43. (b) we have that this walk also has no repeated edges, hence it is a path.

However, if this is not the case we must somehow shorten it to eliminate all the repeating vertex. We start observing the walk from left to right until we get to the first repetition of some vertex. We then eliminate the portion of the walk from the first time that vertex occurs to the second time it occurs. For instance, if we have this walk

$$u = v_0, e_1, \boxed{v_1, e_4, v_4, e_{10}, v_{10}, e_1}, v_1, e_3, v_3, \ldots, e_8, v_8, e_6, v_6 = v$$

we will eliminate the boxed red part, thus obtaining another walk with one less repetition. If this new walk has no repeated vertex we stop there and reach the same conclusion as explained above.

However, it the new walk still has repeated vertex, we apply the same procedure. We do this until all the repeated vertices are eliminated.

Once we finish this series of steps, we get the walk with no repeated vertices. According to the result in exercise 43. (b), this walk also doesn't have repeated edges. Therefore, we obtained the path from u to v.

Since u and v were an arbitrary two vertices, we proved the Lemma.

Result

2 of 2

HINT: Eliminating the parts of the walk from one appearance of a vertex to the repeated appearance, w

Exercise 43 Exercise 45

Exercise 45

Chapter 10, section 10.1, page 697

Discrete Mathematics with Applications
ISBN: 9781337694193

Table of contents

Solution

Verified

Step 1

1 of 3

DEFINITIONS

A **walk** from v to w is a finite sequence of alternatively adjacent vertices and edges of a graph.

A **trail** from v to w is a walk that does not contain a repeated edge.

A **closed walk** is a walk that starts and ends at the same vertex.

A **circuit** is a closed walk with at least one edge and no repeated edges.

Step 2

2 of 3

SOLUTION

To proof: If vertices v and w are vertices in a circuit of the graph G and one edge is removed from the circuit, then there exists a trial from v to w in G.

PROOF

Let v and w be vertices in a circuit $ve_1v_1e_2v_2....v_{n-1}e_nwe_{n+1}v_{n+1}e_{n+2}v_{n+2}...v_{n+m-1}e_{n+m}v$ of the graph G (for some positive integer n and some positive integer m) and let us remove the edge e_i from the circuit ($1 \leq i \leq m+n$).

It is safe to assume that v and w are distinct, because if $v = w$, then either $ve_1v_1e_2v_2....v_{n-1}e_nw$ or $ve_{n+m}v_{n+m-1}e_{n+m-2}v_{n+m-2}...v_{n+1}e_{n+1}w$ will still form a trial from v to w (as the circuit contain no repeated edges).

If $1 \leq i \leq n$, then no edge was removed from the part of the circuit from w to v: $we_{n+1}v_{n+1}e_{n+2}v_{n+2}...v_{n+m-1}e_{n+m}v$ and then $ve_{n+m}v_{n+m-1}e_{n+m-2}v_{n+m-2}...v_{n+1}e_{n+1}w$ is still a trail from v to w (as the circuit contain no repeated edges).

If $n+1 \leq i \leq n+m$, then no edge was removed from the part of the circuit from v to w: $ve_1v_1e_2v_2....v_{n-1}e_nw$ and then $ve_1v_1e_2v_2....v_{n-1}e_nw$ is still a trail from v to w. (as the circuit contain no repeated edges).

Thus we note that there will always exist a trail from v to w.

$\square$

Result

3 of 3

Proof "If vertices v and w are vertices in a circuit of the graph G and one edge is removed from the circuit, then there exists a trial from v to w in G." by determining a trial from v to w that is part of the circuit

Exercise 44 Exercise 46

Exercise 46

Chapter 10, section 10.1, page 697

Discrete Mathematics with Applications
ISBN: 9781337694193

Table of contents

Solutions

Verified

Solution A Solution B

Step 1

1 of 3

DEFINITIONS

A **walk** from v to w is a finite sequence of alternatively adjacent vertices and edges of a graph.

A **trail** from v to w is a walk that does not contain a repeated edge.

A **closed walk** is a walk that starts and ends at the same vertex.

A **circuit** is a closed walk with at least one edge and no repeated edges.

Step 2

2 of 3

SOLUTION

Let v and w be vertices in a circuit $ve_1v_1e_2v_2....v_{n-1}e_nwe_{n+1}v_{n+1}e_{n+2}v_{n+2}...v_{n+m-1}e_{n+m}v$ of the graph G (for some positive integer n and some positive integer m) and let us remove the edge e_i from the circuit ($1 \leq i \leq m+n$).

The red edge is the edge that gets removed from the circuit, while the green trail (part of the circuit) will then still be a trail from v to w.

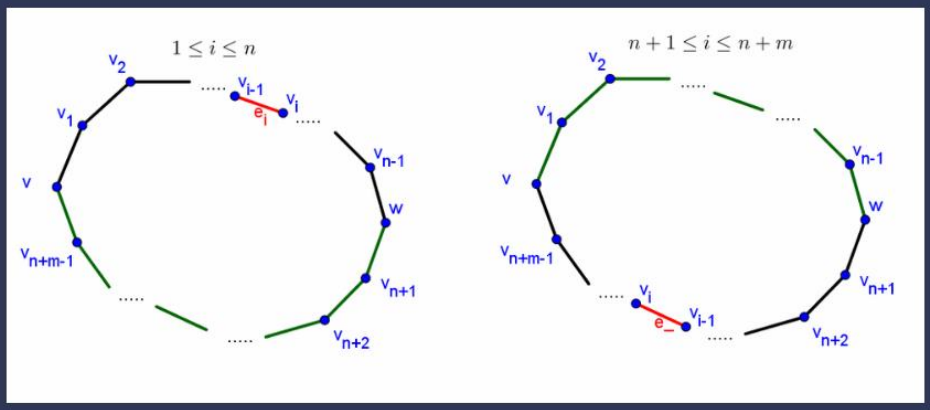

Result

3 of 3

See image

Exercise 45 Exercise 47

Exercise 46

Chapter 10, section 10.1, page 697

Discrete Mathematics with Applications
ISBN: 9781337694193

Table of contents

Solutions

Verified

Solution A Solution B

Step 1

1 of 2

The edge e is removed from the circuit $v_1v_2v_3v_4v_1$ and still the graph obtained is connected.

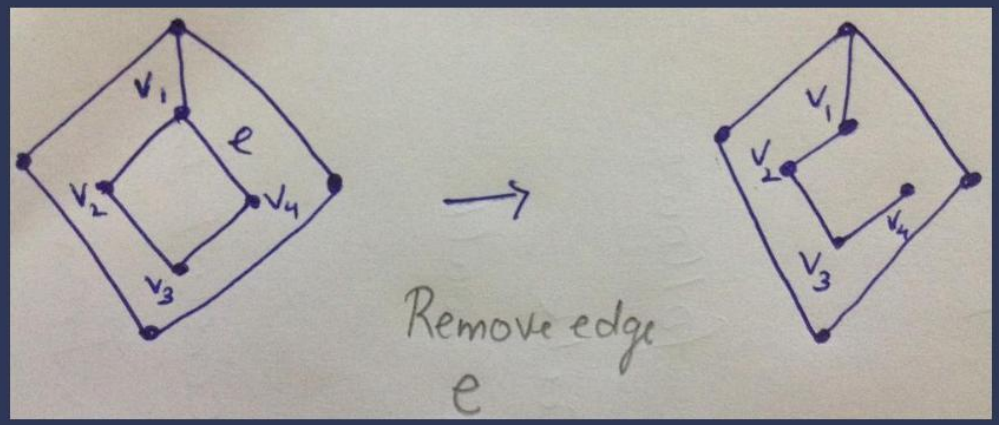

Step 2

2 of 2

Remark- We can remove any edge from a cycle and still get a connected graph.

Exercise 45 Exercise 47

Exercise 47

Chapter 10, section 10.1, page 697

Discrete Mathematics with Applications
ISBN: 9781337694193

Table of contents

Solution

Verified

Step 1

1 of 3

DEFINITIONS

A **walk** from v to w is a finite sequence of alternatively adjacent vertices and edges of a graph.

A **trail** from v to w is a walk that does not contain a repeated edge.

Step 2

2 of 3

SOLUTION

To proof: If there exists a trail from vertex v to vertex w in G, then there exists a trial from w to v.

PROOF

Let v and w be vertices from the graph G and let $ve_1v_1e_2v_2....v_{n-1}e_nw$ be a trail from vertex v to w (for some nonnegative integer n).

Since $ve_1v_1e_2v_2....v_{n-1}e_nw$ is a trial, $ve_1v_1e_2v_2....v_{n-1}e_nw$ contains no repeated edges.

If $v = w$, then v is a trail from vertex w to vertex v (note that the trail cannot contain any repeated edges as it does not contain any edges).

If $v \neq w$, then $we_nv_{n-1}e_{n-1}....v_2e_2v_1e_1v$ is a walk from w to v. Moreover, $we_nv_{n-1}e_{n-1}....v_2e_2v_1e_1v$ contains no repeated edges since $ve_1v_1e_2v_2....v_{n-1}e_nw$ contained no repeated edges and thus $we_nv_{n-1}e_{n-1}....v_2e_2v_1e_1v$ is then also a trail.

$\square$

Result

3 of 3

Proof "If there exists a trail from vertex v to vertex w in G, then there exists a trial from w to v." by showing that the trail from vertex v to vertex w in the opposite direction forms a trail from w to v.

Exercise 46 Exercise 48

Exercise 48

Chapter 10, section 10.1, page 697

Discrete Mathematics with Applications
ISBN: 9781337694193
Table of contents

Solution Verified

Step 1

1 of 3

DEFINITIONS

A **walk** from v to w is a finite sequence of alternatively adjacent vertices and edges of a graph.

A **trail** from v to w is a walk that does not contain a repeated edge.

A **closed walk** is a walk that starts and ends at the same vertex.

A **circuit** is a closed walk with at least one edge and no repeated edges.

A **simple circuit** is a circuit with no repeated vertices except for the first and last vertex.

Step 2

2 of 3

SOLUTION

Let $ve_1v_1e_2v_2....v_{n-1}e_nv$ be a circuit that starts and ends at vertex v in some graph G (for some positive integer n).

If the circuit $ve_1v_1e_2v_2....v_{n-1}e_nv$ contains no repeated vertices, then the circuit $ve_1v_1e_2v_2....v_{n-1}e_nv$ is a simple circuit as well.

If $ve_1v_1e_2v_2....v_{n-1}e_nv$ contains some repeated vertex $v_i = v_j$ ($1 \leq i, j \leq n-1$ with $i \neq j$), then we remove the part of the circuit between these two vertices. The resulting path will still be a circuit, because the circuit will still contain at least one edge and will still contain no repeated edges. Repeat this procedure until the resulting circuit contains no more repeated vertex and the resulting circuit then is a simple circuit.

We then note that the graph needs to contain a simple circuit that starts and ends at v.

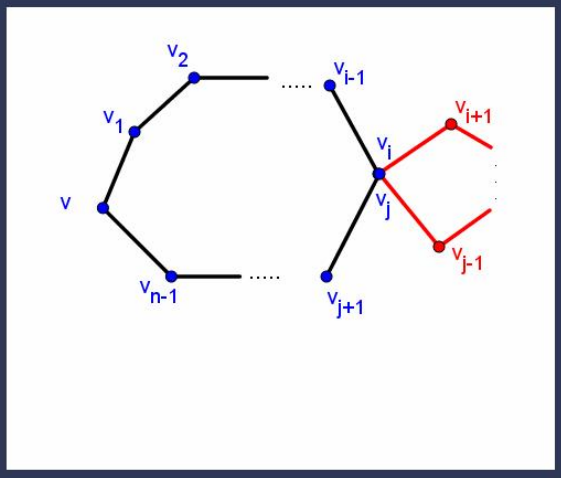

Result

3 of 3

Yes

Exercise 47 Exercise 49

Exercise 49

Chapter 10, section 10.1, page 697

Discrete Mathematics with Applications
ISBN: 9781337694193
Table of contents

Solution

Verified

Step 1

1 of 3

DEFINITIONS

A **walk** from v to w is a finite sequence of alternatively adjacent vertices and edges of a graph.

A **trail** from v to w is a walk that does not contain a repeated edge.

A **closed walk** is a walk that starts and ends at the same vertex.

A **circuit** is a closed walk with at least one edge and no repeated edges.

Step 2

2 of 3

SOLUTION

To proof: If there exists a circuit in a graph that starts and ends at some vertex v and if the circuit contains another vertex w, then there exists a circuit in the graph that starts and ends at w.

PROOF

Let $ve_1v_1e_2v_2....v_{n-1}e_nwe_{n+1}v_{n+1}e_{n+2}v_{n+2}...v_{n+m-1}e_{n+m}v$ be a circuit of the graph G that starts and ends at some vertex v and that contains some other vertex w (for some positive integer n and some positive integer m). Note that we assume that v and w are distinct.

Since $ve_1v_1e_2v_2....v_{n-1}e_nwe_{n+1}v_{n+1}e_{n+2}v_{n+2}...v_{n+m-1}e_{n+m}v$ is a circuit,

$ve_1v_1e_2v_2....v_{n-1}e_nwe_{n+1}v_{n+1}e_{n+2}v_{n+2}...v_{n+m-1}e_{n+m}v$is a closed walk with at least one edge and no repeated edges.

$we_{n+1}v_{n+1}e_{n+2}v_{n+2}...v_{n+m-1}e_{n+m}ve_1v_1e_2v_2....v_{n-1}e_nw$ is then a walk from w to w. Moreover, the walk is a closed walk as it starts and ends at the same vertex. We note that the walk also contains at least one edge (since

$ve_1v_1e_2v_2....v_{n-1}e_nwe_{n+1}v_{n+1}e_{n+2}v_{n+2}...v_{n+m-1}e_{n+m}v$ contains at least one edge) and contains no repeated edges (since

$ve_1v_1e_2v_2....v_{n-1}e_nwe_{n+1}v_{n+1}e_{n+2}v_{n+2}...v_{n+m-1}e_{n+m}v$ contains no repeated edges). Thus $we_{n+1}v_{n+1}e_{n+2}v_{n+2}...v_{n+m-1}e_{n+m}ve_1v_1e_2v_2....v_{n-1}e_nw$ is then a circuit that starts and ends at w.

$\square$

Result

3 of 3

Proof "If there exists a circuit in a graph that starts and ends at some vertex v and if the circuit contains another vertex w, then there exists a circuit in the graph that starts and ends at w." by determining a circuit that starts and ends at w using the known circuit that starts and ends at vertex v.

Exercise 48 Exercise 50

Exercise 50

Chapter 10, section 10.1, page 697

Discrete Mathematics with Applications
ISBN: 9781337694193

Table of contents

Solution

Verified

Step 1

1 of 3

DEFINITIONS

A **walk** from v to w is a finite sequence of alternatively adjacent vertices and edges of a graph.

A **trail** from v to w is a walk that does not contain a repeated edge.

A **closed walk** is a walk that starts and ends at the same vertex.

A **circuit** is a closed walk with at least one edge and no repeated edges.

Step 2

2 of 3

SOLUTION

Given:

G is a connected graph

C is a circuit in G that does not contain every vertex of G

G' is the subgraph obtained by removing all edges of C from G and removing all isolated vertices (due to the removal of edges)

To proof: There exists a vertex v such that v is in both C and G'.

PROOF

Since C is a circuit in G that does not contain every vertex in G, there exists a vertex w in G that is not contained in the circuit C.

Since the graph G is connected, there exists an edge e (that is not a loop) with w as its endpoint and this edge e cannot be a part of the circuit C (if e is in the circuit C, then w would need to be in the circuit C as well). Note that this implies that w is a vertex in G' and e is also an edge in G'. Let x be the other endpoint of the edge e (which exists as e is not a loop), then x is also an element in G'.

If x is some element in C, then x is a vertex that is both in C and in G' and thus the proof would then be finished.

If x is not some element in C, then (similar to the reasoning for w) there exists an edge f (no loop) with endspoints x and y with x_1 also an element in G'. Repeat this reasoning until you find an element $v = x_i$ that is also an element in C (which needs to exists as the graph G is connected and thus there exists at least one edge in G' that connects to the circuit C in G).

$\square$

Result

3 of 3

Proof "There exists a vertex v such that v is in both C and G'." by using that G is connected and thus there needs to exists a path from the vertex not in C to some element in C (which will be an element in G' and in C).

Exercise 49 Exercise 51

Exercise 51

Chapter 10, section 10.1, page 697

Discrete Mathematics with Applications
ISBN: 9781337694193

Table of contents

Solution

Verified

Step 1

1 of 3

DEFINITIONS

A **walk** from v to w is a finite sequence of alternatively adjacent vertices and edges of a graph.

A **trail** from v to w is a walk that does not contain a repeated edge.

A **closed walk** is a walk that starts and ends at the same vertex.

A **circuit** is a closed walk with at least one edge and no repeated edges.

An **Euler circuit** is a circuit that contains every vertex and every edge of the graph.

A graph is **connected** if there exists a walk between every pair of vertices.

Step 2

2 of 3

SOLUTION

To proof: A graph that contains an Euler circuit is connected.

PROOF BY CONTRADICTION

Let G be a graph that contains some Euler circuit E where e_i are the edges in G and v_i are the vertices in G ($i = 1, 2, \ldots, n$ and n a positive integer).

Let us assume that G is not connected. Then there exist two vertices v and w such that there does not exists a walk between v and w.

Note that v and w need to be distinct, because else v is a walk from v to w.

This then also implies that v and w cannot both be vertices in the Euler circuit, because there exists a walk between any two distinct vertices in a circuit. This then implies that either v is not an vertex in E or w is not a vertex in E. However, this is in contradiction with the definition of an Euler circuit (as an Euler circuit contains every vertex of the graph).

This then implies that our assumption "G is not connected" is wrong and thus G needs to be connected.

$\square$

Result

3 of 3

Proof "A graph that contains an Euler circuit is connected." by using a proof by contradiction.

Exercise 50 Exercise 52

Exercise 52

Chapter 10, section 10.1, page 697

Discrete Mathematics with Applications
ISBN: 9781337694193

Table of contents

Solution

Verified

Step 1

1 of 4

DEFINITIONS

A **walk** from v to w is a finite sequence of alternatively adjacent vertices and edges of a graph.

A **trail** from v to w is a walk that does not contain a repeated edge.

A **closed walk** is a walk that starts and ends at the same vertex.

A **circuit** is a closed walk with at least one edge and no repeated edges.

An **Euler circuit** is a circuit that contains every vertex at least once and every edge of the graph exactly once.

An **Euler path** is a path that contains every vertex at least once and every edge of the graph exactly once.

A graph is **connected** if there exists a walk between every pair of vertices.

Step 2

2 of 4

SOLUTION

Given:

G is a graph

v and w are two distinct vertices of G

To proof: G contains an Euler path from v to w if and only if G is connected, v and w have odd degree and all other vertices of G have positive even degree.

PROOF

First part $\Rightarrow$

Let $ve_1v_1e_2v_2....e_{n-1}v_{n-1}e_nw$ be an Euler path from v to w. This then implies that all edges in G are $e_1, e_2, ..., e_{n-1}, e_n$, while the Euler path also contains all vertices of G at least once.

Let us define a (new) edge e from w to v and let $G' = G \cup \{e\}$ (which is the graph G with an added edge). $ve_1v_1e_2v_2....e_{n-1}v_{n-1}e_nwev$ is then an Euler circuit in G'.

A graph contains an Euler circuit if and only if the graph is connected and all vertices of the graph have a positive even degree. This then implies that G' is connected and all vertices of G' have an even degree.

G is then also connected, because G is G' without the edge e (even though we removed an edge between v and w, $ve_1v_1e_2v_2....e_{n-1}v_{n-1}e_nw$ is still a walk from v to w).

The vertices v and w in G then have an odd degree, because in G' they had an even degree, but in G their degree decreased by 1 (as the edge e between v and w is removed).

All other vertices in G have an even degree, because in G' they had an even degree and they keep the same degree (as all edges connecting to the vertices remain the same).

Step 3

3 of 4

Second part $\Leftarrow$

Let G be connected, let v and w have odd degrees and let all other vertices of G have positive even degrees.

Let us define a (new) edge e from w to v and let $G' = G \cup \{e\}$ (which is the graph G with an added edge). $ve_1v_1e_2v_2....e_{n-1}v_{n-1}e_nwev$ is then an Euler circuit in G'.

We then note that G' is connected (as G is connected) and all vertices of G have a positive even degree (as the degree of v and w is increased by 1 due to the new edge).

A graph contains an Euler circuit if and only if the graph is connected and all vertices of the graph have a positive even degree. This then implies that G' contains an Euler circuit E.

Let E' be the Euler circuit with the edge e removed. E' is then a path that contains every vertex of G at least once and that contains every vertex of G, which implies that E' is then an Euler path in the graph G.

Conclusion Combining the result of the first and second part, we then note that we proved that G contains an Euler path from v to w if and only if G is connected, v and w have odd degree and all other vertices of G have positive even degree.

$\square$

Result

4 of 4

Proof "G contains an Euler path from v to w if and only if G is connected, v and w have odd degree and all other vertices of G have positive even degree. " by using that a graph contains an Euler circuit if and only if the graph is connected and all vertices of the graph have a positive even degree.

Exercise 51 Exercise 53

Exercise 53

Chapter 10, section 10.1, page 697

Discrete Mathematics with Applications
ISBN: 9781337694193

Table of contents

Solution

Verified

Step 1

1 of 4

DEFINITIONS

An **Euler circuit** is a circuit that contains every vertex at least once and every edge of the graph exactly once.

A **Hamilton circuit** is a simple circuit that passes through every vertex exactly once.

A **complete graph** K_n $(n \geq 1)$ is a simple graph with n vertices and an edge between every pair of vertices.

Step 2

2 of 4

SOLUTION

K_n is a simple graph with n vertices $v_1, v_2, \ldots, v_n$ and an edge between every pair of vertices.

(a) An Euler circuit exists when the graph is connected and when every vertex of the graph has an even degree.

K_n is a connected graph, because there is an edge between every pair of vertices. Since each vertex is connected to the other $n-1$ vertices by an edge, the degree of every vertex v_i is $n-1$.

$$\deg(v_i) = n - 1 \text{ for } i = 1, 2, \ldots, n$$

We need the degree of every vertex to be even, thus $n-1$ needs to be even. However, this then implies that n needs to be odd.

K_n is then a connected graph with every vertex of even degree when n is odd and thus K_n contains an Euler circuit when n is odd.

However, when $n = 1$, then K_1 does not contain any edges and thus K_1 does not contain any circuits eit

Step 3

3 of 4

(b) A Hamilton circuit is a circuit that passes through every vertex exactly once.

When $n = 1$, then K_1 contains no edges and thus K_1 contains no circuits either (including no Hamilton circuit).

When $n = 2$, then K_2 contains only 1 edge and thus any walk that starts and ends in the same vertex of K_2 then needs to contain the same edge twice, which implies that there exists no circuit (including no Hamilton circuit).

When $n \geq 3$, then $v_1 v_2 v_3 \ldots v_n v_1$ forms a Hamilton circuit of K_n, since there exists a unique edge between every pair of vertices. Thus K_n then contains a Hamilton circuit when $n \geq 3$.

Result

4 of 4

(a) n odd and $n > 1$

(b) $n \geq 3$

Exercise 52 Exercise 54

Exercise 54

Chapter 10, section 10.1, page 697

Discrete Mathematics with Applications
ISBN: 9781337694193

Table of contents

Solution

Verified

Step 1

1 of 3

$a.$ $K_{m,n}$ has an Euler circuit if and only if both m and n are positive even integers.

$\underline{JUSTIFICATION:}$ A graph has Euler circuit if and only if it is connected and every vertex has an even degree. $K_{m,n}$ is connected and every vertex has degree either m or n. So, in order that $K_{m,n}$ has every vertex of even degree, both m and n must be even.

Step 2

2 of 3

$b.$ $K_{m,n}$ has Hamiltonian circuit if and only if $m = n \geq 2$

$\underline{JUSTIFICATION:}$ Every circuit in $K_{m,n}$ has an alternate sequence of vertices from the two partitions of the vertices of $K_{m,n}$. So, a Hamiltonian circuit contains $2k$ number of distinct vertices of $K_{m,n}$ where half of the vertices are from one partition and the other half from the second vertices. This means, $m = n = k$ where $k \geq 2$. Note that for $m = n = 1$ there is no Hamiltonian circuit.

Result

3 of 3

(a) m and n are both even

(b) $n = m$ and $m \geq 2$

Exercise 53 Exercise 55

Exercise 55

Chapter 10, section 10.1, page 697

Discrete Mathematics with Applications
ISBN: 9781337694193

Table of contents

Solution

Verified

Step 1

1 of 2

Let G be a simple disconnected graph with n vertices.

In an exercise of the previous section, we proved that the maximum number of edges of a simple graph with n vertices is $\frac{n(n-1)}{2}$ (as the complete graph K_n contains $n(n-1)/2$ edges).

However, in this case, we know that the graph G is also disconnected, which implies that there need to exist two vertices between which there exists no walk. Let us consider one vertex v in G. We then need to remove at least $n-1$ edges from the complete graph K_n to disconnect vertex v from the rest of the graph (as the vertex v is connected to $n-1$ other vertices by an edge).

When we remove $n-1$ edges from the $\frac{n(n-1)}{2}$, then the graph has $\frac{n(n-1)}{2}-(n-1)=(n-1)\left(\frac{n}{2}-1\right)$ edges remaining and thus the maximum number of edges in a simple disconnected graph with n vertices is $(n-1)\left(\frac{n}{2}-1\right)$.

Result

2 of 2

$$(n-1)\left(\frac{n}{2}-1\right) \text{ edges}$$

Exercise 54 Exercise 56

Exercise 56

Chapter 10, section 10.1, page 697

Discrete Mathematics with Applications
ISBN: 9781337694193

Table of contents

Solution

Verified

Step 1

1 of 4

DEFINITIONS

A **bipartite graph** is a simple graph whose vertices can be partitioned into two sets V_1 and V_2 such that there are no edges among the vertices of V_1 and no edges among the vertices of V_2, while there can be edges between a vertex of V_1 and a vertex of V_2.

Step 2

2 of 4

SOLUTION

(a) To proof: If G is a bipartite graph, then every circuit in G has an even number of edges.

PROOF BY CONTRADICTION

Let G be a bipartite graph. Let us assume that there exists a circuit $v_1e_1v_2e_2v_3e_3...v_{n-1}e_nv_1$ with an odd number of edges (thus n is an odd positive integer). $\text{\color{#4257b2}We then need to derive a contradiction, which would implies that the graph G cannot contain a circuit with an odd number of edges.\color{default}

\\

Since G is bipartite, we can partition the vertices of G into two sets V_1 and V_2. Without loss of generality, we can assume $v_1 \in V_1$ (else interchange V_1 and V_2).

$$v_1 \in V_1$$

Since there can only be edges between a vertex of V_1 and a vertex of V_2 and since e_1 is an edge between between $v_1 \in V_1$ and v_2.

$$v_2 \in V_2$$

Since there can only be edges between a vertex of V_1 and a vertex of V_2 and since e_2 is an edge between between $v_2 \in V_2$ and v_3.

$$v_3 \in V_1$$

Continuing this reasoning: $$v_4\in V_2$$

$$v_5 \in V_1$$

$$....$$

Thus we note that $v_i \in V_1$ when i odd and $v_i \in V_2$ when i even. Since n is odd, $n-1$ is even:

$$v_{n-1} \in V_2$$

However, e_n is then an edge between between $v_{n-1} \in V_1$ and $v_1 \in V_1$, which results in a contradiction (as G is bipartite and thus there no edges among vertices of V_1).

□}$

Step 3

3 of 4

To proof: If G is a graph with at least two vertices and if G does not contain a circuit with an odd number of edges, then G is a bipartite graph.

PROOF BY CONTRADICTION

Let us assume that G is a graph that does not contain a circuit with an odd number of edges. Let us assume that G is not bipartite. $\text{\color{#4257b2}We then need to derive a contradiction, which would implies that the graph G needs to be bipartite.\color{default}

\\

Since G is not bipartite, any partitioning of the vertices into two sets V_1 and V_2 will result in some elements of V_1 being connected by an edge or some elements of V_2 being connected by some edge.

\\

Let v be one of the vertices that causes G not to be bipartite. Then there exists a walk $vv_1v_2v_3v_4...v_{n-1}v_nv$ with n even (such that $v_i \in V_1$ with i odd and $v_i \in V_2$ with i even in some partial partitioning of the vertices of G). However, the walk $vv_1v_2v_3v_4...v_{n-1}v_nv$ is then a circuit with $n+1$ edges and thus we found a circuit with an odd number of edges.

\\

We then derived a contradiction, as we assumed that G did not contain a circuit with an odd number of edges. This then implies that G needs to be bipartite.

□}$

Result

4 of 4

Use a proof by contradiction to prove both parts.

Exercise 55 Exercise 57

Exercise 57

Chapter 10, section 10.1, page 697

Discrete Mathematics with Applications
ISBN: 9781337694193

Table of contents

Solution

Verified

Step 1

1 of 2

There is a misprint in the book. The first assumption we have to take is that $v_1 \neq v_{n+1}$.

Suppose G be a connected graph in which every vertex has even degree. Consider the path with maximum length as

$$C : v_1 e_1 v_2 e_2 v_3 \cdots e_n v_{n+1}$$

This implies that C has a minimum of as many vertices and edges as any other path in G.

Let us assume that $v_1 \neq v_{n+1}$. While travelling on the circuit, as C exits v_1, since the degree of each vertex of G is a positive even integer, all the entries after that adds two to the degree of v_1 and then the assumption $v_1 \neq v_{n+1}$ contradicts the fact that every vertex has even degree.

Now, suppose that H is a subgraph of G that contains all the vertices and edges in C. Let's assume that $H \neq G$. Then, there exists a vertex $a \in G$ such that $a \notin H$. Since, G is connected, a and v_1 are joined by path m. Let v_i be the first vertex in C which is not present in m. Also, let v be the vertex in m that connects v_i by an edge e. Now, let's construct a path m' as follows :

$$m' : v e v_i e_i v_{i+1} \cdots e_n v_{n+1}$$

We see that m' has one more vertex than in C which is a contradiction since C has a minimum of same number of vertices as any other path in G. Hence, our assumption is incorrect and H contains every vertex of G.

Similarly again, we suppose that H is a subgraph of G that contains all the vertices and edges in C and assume that $H \neq G$. Then, there exists an edge $e \in G$ such that $e \notin H$. So, there must be vertices v_j and v_k in G that are incident on e. Now, let's construct a path m'' as follows :

$$m'' : v_j e v_k e_i v_{k+1} \cdots e_n v_{n+1}$$

We see that m'' has one more edge than in C which is a contradiction since C has a minimum of same number of edges as any other path in G. Hence, our assumption is incorrect and H contains every edge of G.

Result

2 of 2

Using the contradiction for the assumptions that $v_1 \neq v_{n+1}$ and $H \neq G$ proves that H contains every vertex and edge of G.

Exercise 56 Exercise 1

Exercise 2

Chapter 10, section 10.2, page 710

Discrete Mathematics with Applications
ISBN: 9781337694193
Table of contents

Solution

Verified

Step 1

1 of 4

DEFINITIONS

The **adjacency matrix** $\mathbf{A} = [a_{ij}]$ is $n \times n$ zero-one matrix with

$$a_{ij} = \begin{cases} 1 & \text{if there is an edge from } v_i \text{ to } v_j \\ 0 & \text{otherwise} \end{cases}$$

Step 2

2 of 4

SOLUTION

(a) The given directed graph contains 3 vertices: v_1, v_2, v_3. The adjacency matrix corresponding to the directed graph then needs to be a 3×3-matrix.

$$\begin{array}{c c} & \begin{array}{ccc} v_1 & v_2 & v_3 \end{array} \\ \begin{array}{c} v_1 \\ v_2 \\ v_3 \end{array} & \begin{bmatrix} \cdots & \cdots & \cdots \\ \cdots & \cdots & \cdots \\ \cdots & \cdots & \cdots \end{bmatrix} \end{array}$$

Since e_1 is an edge from v_1 to v_2, we place a 1 in the cell a_{12}.

Since e_2 is an edge from v_2 to v_1, we place a 1 in the cell a_{21}.

Since e_3 is an edge from v_1 to v_3, we place a 1 in the cell a_{13}.

There are no other edges and thus all other elements in the matrix need to be a 0.

$$\begin{array}{c c} & \begin{array}{ccc} v_1 & v_2 & v_3 \end{array} \\ \begin{array}{c} v_1 \\ v_2 \\ v_3 \end{array} & \begin{bmatrix} 0 & 1 & 1 \\ 1 & 0 & 0 \\ 0 & 0 & 0 \end{bmatrix} \end{array}$$

Step 3

3 of 4

(b) The given directed graph contains 4 vertices: v_1, v_2, v_3, v_4. The adjacency matrix corresponding to the directed graph then needs to be a 4×4-matrix.

$$\begin{array}{c c} & \begin{array}{cccc} v_1 & v_2 & v_3 & v_4 \end{array} \\ \begin{array}{c} v_1 \\ v_2 \\ v_3 \\ v_4 \end{array} & \begin{bmatrix} \cdots & \cdots & \cdots & \cdots \\ \cdots & \cdots & \cdots & \cdots \\ \cdots & \cdots & \cdots & \cdots \\ \cdots & \cdots & \cdots & \cdots \end{bmatrix} \end{array}$$

Since e_1 is an edge from v_1 to v_1, we place a 1 in the cell a_{11}.

Since e_2 is an edge from v_3 to v_1, we place a 1 in the cell a_{31}.

Since e_3 is an edge from v_1 to v_3, we place a 1 in the cell a_{13}.

Since e_4 is an edge from v_2 to v_3, we place a 1 in the cell a_{23}.

Since e_5 is an edge from v_4 to v_3, we place a 1 in the cell a_{43}.

Since e_6 is an edge from v_3 to v_4, we place a 1 in the cell a_{34}.

There are no other edges and thus all other elements in the matrix need to be a 0.

$$\begin{array}{c c} & \begin{array}{cccc} v_1 & v_2 & v_3 & v_4 \end{array} \\ \begin{array}{c} v_1 \\ v_2 \\ v_3 \\ v_4 \end{array} & \begin{bmatrix} 1 & 0 & 1 & 0 \\ 0 & 0 & 1 & 0 \\ 1 & 0 & 0 & 1 \\ 0 & 0 & 1 & 0 \end{bmatrix} \end{array}$$

Result

4 of 4

(a)

$$\begin{bmatrix} 0 & 1 & 1 \\ 1 & 0 & 0 \\ 0 & 0 & 0 \end{bmatrix}$$

(b)

$$\begin{bmatrix} 1 & 0 & 1 & 0 \\ 0 & 0 & 1 & 0 \\ 1 & 0 & 0 & 1 \\ 0 & 0 & 1 & 0 \end{bmatrix}$$

Exercise 1 Exercise 3

Exercise 1

Chapter 10, section 10.2, page 710

Discrete Mathematics with Applications
ISBN: 9781337694193
Table of contents

Solution

Verified

Step 1

1 of 4

(a)

$$\begin{bmatrix} a+b & a-c \\ c & b-a \end{bmatrix} = \begin{bmatrix} 1 & 0 \\ -1 & 3 \end{bmatrix}$$

The two matrices are equal if every pair of corresponding elements in the two matrices are identical:

$$\begin{aligned} a+b &= 1 \\ a-c &= 0 \\ c &= -1 \\ b-a &= 3 \end{aligned}$$

By the third equation, we know that $c = -1$.

The second equation $a - c = 0$ implies $a = c$ and thus $a = c = -1$.

Let us solve the other two equations to b:

$$\begin{aligned} b &= 1 - a \\ a &= -1 \\ c &= -1 \\ b &= 3 + a \end{aligned}$$

Substitute a with -1 and evaluate:

$$\begin{aligned} b &= 1 - a = 1 - (-1) = 1 + 1 = 2 \\ a &= -1 \\ c &= -1 \\ b &= 3 + a = 3 + (-1) = 3 - 1 = 2 \end{aligned}$$

Thus we then obtain $a = -1, b = 2$ and $c = -1$.

Step 2

2 of 4

(b)

$$\begin{bmatrix} 2a & b+c \\ c-a & 2b-a \end{bmatrix} = \begin{bmatrix} 4 & 3 \\ 1 & -2 \end{bmatrix}$$

The two matrices are equal if every pair of corresponding elements in the two matrices are identical:

$$\begin{aligned} 2a &= 4 \\ b+c &= 3 \\ c-a &= 1 \\ 2b-a &= -2 \end{aligned}$$

Divide each side of the first equation by 2.

Subtract c from each side in the second equation.

Add a to each side in the third equation.

Add a to each side in the fourth equation.

$$\begin{aligned} a &= 2 \\ b &= 3 - c \\ c &= 1 + a \\ 2b &= -2 + a \end{aligned}$$

Substitute a with 2 in the third equation and evaluate.

Divide each side of the fourth equation by 2.

$$\begin{aligned} a &= 2 \\ b &= 3 - c \\ c &= 1 + a = 1 + 2 = 3 \\ b &= \frac{-2 + a}{2} \end{aligned}$$

Step 3

3 of 4

Substitute c by 3 in the second equation and evaluate.

Substitute a by 2 in the fourth equation and evaluate.

$$\begin{aligned} a &= 2 \\ b &= 3 - c = 3 - 3 = 0 \\ c &= 1 + a = 1 + 2 = 3 \\ b &= \frac{-2 + a}{2} = \frac{-2 + 2}{2} = \frac{0}{2} = 0 \end{aligned}$$

Thus we then obtain $a = 2, b = 0$ and $c = 3$.

Result

4 of 4

(a) $a = -1, b = 2$ and $c = -1$

(b) $a = 2, b = 0$ and $c = 3$

Exercise 57 Exercise 2

Exercise 3

Chapter 10, section 10.2, page 710

Discrete Mathematics with Applications
ISBN: 9781337694193
Table of contents

Solution

Verified

Step 1

1 of 4

DEFINITIONS

The **adjacency matrix** $\mathbf{A} = [a_{ij}]$ is $n \times n$ zero-one matrix with

$$a_{ij} = \begin{cases} 1 & \text{if there is an edge from } v_i \text{ to } v_j \\ 0 & \text{otherwise} \end{cases}$$

Step 2

2 of 4

SOLUTION

(a)

$$\begin{bmatrix} 1 & 0 & 1 & 2 \\ 0 & 0 & 1 & 0 \\ 0 & 2 & 1 & 1 \\ 0 & 1 & 1 & 0 \end{bmatrix}$$

The given adjacency matrix is a 4×4-matrix, which implies that the corresponding directed graph contains 4 vertices. Let us name these vertices v_1, v_2, v_3, v_4.

$$\begin{array}{c} \\ v_1 \\ v_2 \\ v_3 \\ v_4 \end{array} \begin{array}{c} \begin{array}{cccc} v_1 & v_2 & v_3 & v_4 \end{array} \\ \begin{bmatrix} 1 & 0 & 1 & 2 \\ 0 & 0 & 1 & 0 \\ 0 & 2 & 1 & 1 \\ 0 & 1 & 1 & 0 \end{bmatrix} \end{array}$$

Since $a_{11} = 1$, there needs to be 1 loop at vertex v_1.

Since $a_{13} = 1$, there needs to be 1 edge from v_1 to v_3.

Since $a_{14} = 2$, there need to be 2 edges from v_1 to v_4.

Since $a_{23} = 1$, there needs to be 1 edge from v_2 to v_3.

Since $a_{32} = 2$, there need to be 2 edges from v_3 to v_2.

Since $a_{33} = 1$, there needs to be 1 loop at vertex v_3.

Since $a_{34} = 1$, there needs to be 1 edge from v_3 to v_4.

Since $a_{42} = 1$, there needs to be 1 edge from v_4 to v_2.

Since $a_{43} = 1$, there needs to be 1 edge from v_4 to v_3.

There are no other non-zero elements and thus no other edges in the graph either.

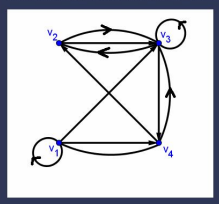

Step 3

3 of 4

(b)

$$\begin{bmatrix} 0 & 1 & 0 & 0 \\ 2 & 0 & 1 & 0 \\ 1 & 2 & 1 & 0 \\ 0 & 0 & 1 & 0 \end{bmatrix}$$

The given adjacency matrix is a 4×4-matrix, which implies that the corresponding directed graph contains 4 vertices. Let us name these vertices v_1, v_2, v_3, v_4.

$$\begin{array}{c} \\ v_1 \\ v_2 \\ v_3 \\ v_4 \end{array} \begin{array}{c} \begin{array}{cccc} v_1 & v_2 & v_3 & v_4 \end{array} \\ \begin{bmatrix} 0 & 1 & 0 & 0 \\ 2 & 0 & 1 & 0 \\ 1 & 2 & 1 & 0 \\ 0 & 0 & 1 & 0 \end{bmatrix} \end{array}$$

Since $a_{12} = 1$, there needs to be 1 edge from v_1 to v_2.

Since $a_{21} = 2$, there need to be 2 edges from v_2 to v_1.

Since $a_{23} = 1$, there needs to be 1 edge from v_2 to v_3.

Since $a_{31} = 1$, there needs to be 1 edge from v_3 to v_1.

Since $a_{32} = 2$, there need to be 2 edges from v_3 to v_2.

Since $a_{33} = 1$, there needs to be 1 loop at vertex v_3.

Since $a_{43} = 1$, there needs to be 1 edge from v_4 to v_3.

There are no other non-zero elements and thus no other edges in the graph either.

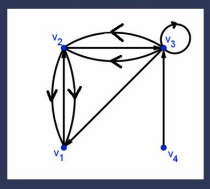

Result

4 of 4

(a) Since $a_{11} = 1$, there needs to be 1 loop at vertex v_1.

Since $a_{13} = 1$, there needs to be 1 edge from v_1 to v_3.

Since $a_{14} = 2$, there need to be 2 edges from v_1 to v_4.

Since $a_{23} = 1$, there needs to be 1 edge from v_2 to v_3.

Since $a_{32} = 2$, there need to be 2 edges from v_3 to v_2.

Since $a_{33} = 1$, there needs to be 1 loop at vertex v_3.

Since $a_{34} = 1$, there needs to be 1 edge from v_3 to v_4.

Since $a_{42} = 1$, there needs to be 1 edge from v_4 to v_2.

Since $a_{43} = 1$, there needs to be 1 edge from v_4 to v_3.

There are no other non-zero elements and thus no other edges in the graph either.

(b) Since $a_{12} = 1$, there needs to be 1 edge from v_1 to v_2.

Since $a_{21} = 2$, there need to be 2 edges from v_2 to v_1.

Since $a_{23} = 1$, there needs to be 1 edge from v_2 to v_3.

Since $a_{31} = 1$, there needs to be 1 edge from v_3 to v_1.

Since $a_{32} = 2$, there need to be 2 edges from v_3 to v_2.

Since $a_{33} = 1$, there needs to be 1 loop at vertex v_3.

Since $a_{43} = 1$, there needs to be 1 edge from v_4 to v_3.

There are no other non-zero elements and thus no other edges in the graph either.

Exercise 2 Exercise 4

Exercise 4

Chapter 10, section 10.2, page 711

Discrete Mathematics with Applications
ISBN: 9781337694193
Table of contents

Solution Verified

Step 1

1 of 6

DEFINITIONS

The **adjacency matrix** $\mathbf{A} = [a_{ij}]$ is $n \times n$ zero-one matrix with

$$a_{ij} = \begin{cases} 1 & \text{if there is an edge from } v_i \text{ to } v_j \\ 0 & \text{otherwise} \end{cases}$$

A **complete graph** K_n $(n \geq 1)$ is a simple graph with n vertices and an edge between every pair of vertices.

A **complete bipartite graph** $K_{m,n}$ with a set M of m vertices and another set N with n vertices, while there are edges between every vertex in M and every vertex of N.

Step 2

2 of 6

SOLUTION

(a) The given graph contains 4 vertices: v_1, v_2, v_3, v_4 The adjacency matrix corresponding to the graph then needs to be a 4×4-matrix.

$$\begin{array}{c} \\ v_1 \\ v_2 \\ v_3 \\ v_4 \end{array} \begin{array}{c} \begin{array}{cccc} v_1 & v_2 & v_3 & v_4 \end{array} \\ \begin{bmatrix} \cdots & \cdots & \cdots & \cdots \\ \cdots & \cdots & \cdots & \cdots \\ \cdots & \cdots & \cdots & \cdots \\ \cdots & \cdots & \cdots & \cdots \end{bmatrix} \end{array}$$

Since e_1 is an edge between v_1 and v_4, we place a 1 in the cell a_{14} and we place a 1 in the cell a_{41}.

Since e_2 is a loop at v_4, we place a 1 in the cell a_{44}.

Since e_3 is an edge between v_1 and v_3, we place a 1 in the cell a_{13} and we place a 1 in the cell a_{31}.

Since e_4 and e_5 are 2 edges between v_2 and v_3, we place a 2 in the cell a_{23} and we place a 2 in the cell e_{32}.

There are no other edges and thus all other elements in the matrix need to be a 0.

$$\begin{array}{c} \\ v_1 \\ v_2 \\ v_3 \\ v_4 \end{array} \begin{array}{c} \begin{array}{cccc} v_1 & v_2 & v_3 & v_4 \end{array} \\ \begin{bmatrix} 0 & 0 & 1 & 1 \\ 0 & 0 & 2 & 0 \\ 1 & 2 & 0 & 0 \\ 1 & 0 & 0 & 1 \end{bmatrix} \end{array}$$

Step 3

3 of 6

(b) The given graph contains 4 vertices: v_1, v_2, v_3, v_4 The adjacency matrix corresponding to the graph then needs to be a 4×4-matrix.

$$\begin{array}{c} \\ v_1 \\ v_2 \\ v_3 \\ v_4 \end{array} \begin{array}{c} \begin{array}{cccc} v_1 & v_2 & v_3 & v_4 \end{array} \\ \begin{bmatrix} \cdots & \cdots & \cdots & \cdots \\ \cdots & \cdots & \cdots & \cdots \\ \cdots & \cdots & \cdots & \cdots \\ \cdots & \cdots & \cdots & \cdots \end{bmatrix} \end{array}$$

Since e_1 is a loop at v_1, we place a 1 in the cell a_{11}.

Since e_2 is a loop at v_2, we place a 1 in the cell a_{22}.

Since e_3 and e_4 are 2 edges between v_2 and v_4, we place a 2 in the cell a_{24} and we place a 2 in the cell a_{42}.

Since e_5 is an edge between v_2 and v_3, we place a 1 in the cell a_{23} and we place a 1 in the cell a_{32}.

Since e_6 is a loop at v_3, we place a 1 in the cell a_{33}.

There are no other edges and thus all other elements in the matrix need to be a 0.

$$\begin{array}{c} \\ v_1 \\ v_2 \\ v_3 \\ v_4 \end{array} \begin{array}{c} \begin{array}{cccc} v_1 & v_2 & v_3 & v_4 \end{array} \\ \begin{bmatrix} 1 & 0 & 0 & 0 \\ 0 & 1 & 1 & 2 \\ 0 & 1 & 1 & 0 \\ 0 & 2 & 0 & 0 \end{bmatrix} \end{array}$$

Step 4

4 of 6

(c) K_4 is a simple graph with 4 vertices and with an edge between every pair of (distinct) vertices. Let us name the 4 vertices: v_1, v_2, v_3, v_4. The adjacency matrix corresponding to the graph then needs to be a 4×4-matrix.

$$\begin{array}{c} \\ v_1 \\ v_2 \\ v_3 \\ v_4 \end{array} \begin{array}{c} \begin{array}{cccc} v_1 & v_2 & v_3 & v_4 \end{array} \\ \begin{bmatrix} \cdots & \cdots & \cdots & \cdots \\ \cdots & \cdots & \cdots & \cdots \\ \cdots & \cdots & \cdots & \cdots \\ \cdots & \cdots & \cdots & \cdots \end{bmatrix} \end{array}$$

Since K_4 contains no loops, the matrix needs to contain a 0 on the main diagonal.

Since K_4 contains 1 edge between every pair of distinct vertices, the matrix needs to contain a 1 for all non-diagonal elements.

$$\begin{array}{c} \\ v_1 \\ v_2 \\ v_3 \\ v_4 \end{array} \begin{array}{c} \begin{array}{cccc} v_1 & v_2 & v_3 & v_4 \end{array} \\ \begin{bmatrix} 0 & 1 & 1 & 1 \\ 1 & 0 & 1 & 1 \\ 1 & 1 & 0 & 1 \\ 1 & 1 & 1 & 0 \end{bmatrix} \end{array}$$

Step 5

5 of 6

(d) $K_{3,2}$ is a graph with a set M of 3 vertices m_1, m_2, m_3 and a set N of 2 vertices n_1, n_2 such that there is an edge between every element of M and every element of N, but there are no edges among elements of M nor among elements of N. Since there are 5 vertices, the adjacency matrix corresponding to the graph then needs to be a 5×5-matrix.

$$\begin{array}{c} \\ m_1 \\ m_2 \\ m_3 \\ n_1 \\ n_2 \end{array} \begin{array}{c} \begin{array}{ccccc} m_1 & m_2 & m_3 & n_1 & n_2 \end{array} \\ \begin{bmatrix} \cdots & \cdots & \cdots & \cdots & \cdots \\ \cdots & \cdots & \cdots & \cdots & \cdots \\ \cdots & \cdots & \cdots & \cdots & \cdots \\ \cdots & \cdots & \cdots & \cdots & \cdots \\ \cdots & \cdots & \cdots & \cdots & \cdots \end{bmatrix} \end{array}$$

Since $K_{3,2}$ contains an edge between every element of M and N, the matrix needs to contain a 3×2-block of 1's in the top right corner and the matrix needs to contain a 2×3-block of 1's in the bottom left corner.

Since $K_{3,2}$ contains no other edges, the remaining elements need to be 0.

$$\begin{array}{c} \\ m_1 \\ m_2 \\ m_3 \\ n_1 \\ n_2 \end{array} \begin{array}{c} \begin{array}{ccccc} m_1 & m_2 & m_3 & n_1 & n_2 \end{array} \\ \begin{bmatrix} 0 & 0 & 0 & 1 & 1 \\ 0 & 0 & 0 & 1 & 1 \\ 0 & 0 & 0 & 1 & 1 \\ 1 & 1 & 1 & 0 & 0 \\ 1 & 1 & 1 & 0 & 0 \end{bmatrix} \end{array}$$

Result

6 of 6

(a)

$$\begin{bmatrix} 0 & 0 & 1 & 1 \\ 0 & 0 & 2 & 0 \\ 1 & 2 & 0 & 0 \\ 1 & 0 & 0 & 1 \end{bmatrix}$$

(b)

$$\begin{bmatrix} 1 & 0 & 0 & 0 \\ 0 & 1 & 1 & 2 \\ 0 & 1 & 1 & 0 \\ 0 & 2 & 0 & 0 \end{bmatrix}$$

(c)

$$\begin{bmatrix} 0 & 1 & 1 & 1 \\ 1 & 0 & 1 & 1 \\ 1 & 1 & 0 & 1 \\ 1 & 1 & 1 & 0 \end{bmatrix}$$

(d)

$$\begin{bmatrix} 0 & 0 & 0 & 1 & 1 \\ 0 & 0 & 0 & 1 & 1 \\ 0 & 0 & 0 & 1 & 1 \\ 1 & 1 & 1 & 0 & 0 \\ 1 & 1 & 1 & 0 & 0 \end{bmatrix}$$

Exercise 3 Exercise 5

Exercise 5

Chapter 10, section 10.2, page 711

Discrete Mathematics with Applications
ISBN: 9781337694193
Table of contents

Solution

Verified

Step 1

1 of 4

DEFINITIONS

The **adjacency matrix** $\mathbf{A} = [a_{ij}]$ is $n \times n$ zero-one matrix with

$$a_{ij} = \begin{cases} 1 & \text{if there is an edge from } v_i \text{ to } v_j \\ 0 & \text{otherwise} \end{cases}$$

Step 2

2 of 4

SOLUTION

(a)

$$\begin{bmatrix} 1 & 0 & 1 \\ 0 & 1 & 2 \\ 1 & 2 & 0 \end{bmatrix}$$

The given adjacency matrix is a 3×3-matrix, which implies that the corresponding directed graph contains 3 vertices. Let us name these vertices v_1, v_2, v_3.

$$\begin{array}{c} \\ v_1 \\ v_2 \\ v_3 \end{array} \begin{array}{c} \begin{array}{ccc} v_1 & v_2 & v_3 \end{array} \\ \begin{bmatrix} 1 & 0 & 1 \\ 0 & 1 & 2 \\ 1 & 2 & 0 \end{bmatrix} \end{array}$$

We note that the matrix is a symmetric matrix (symmetric with respect to the main diagonal of the matrix), which means that the adjacency matrix can represent an undirected graph. $\text{\color{#4257b2}Note: I will create an undirected graph that corresponds with the matrix, but you could also create a corresponding directed graph.\color{default}

\\

Since $a_{11} = 1$, there needs to be 1 loop at vertex v_1.

Since $a_{13} = 1$, there needs to be 1 edge between v_1 and v_3.

Since $a_{22} = 1$, there needs to be 1 loop at vertex v_2.

Since $a_{23} = 2$, there needs to be 2 edges between v_2 and v_3.}$

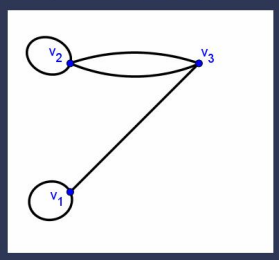

Step 3

3 of 4

(b)

$$\begin{bmatrix} 0 & 2 & 0 \\ 2 & 1 & 0 \\ 0 & 0 & 1 \end{bmatrix}$$

The given adjacency matrix is a 3×3-matrix, which implies that the corresponding directed graph contains 3 vertices. Let us name these vertices v_1, v_2, v_3.

$$\begin{array}{c} \\ v_1 \\ v_2 \\ v_3 \end{array} \begin{array}{c} \begin{array}{ccc} v_1 & v_2 & v_3 \end{array} \\ \begin{bmatrix} 0 & 2 & 0 \\ 2 & 1 & 0 \\ 0 & 0 & 1 \end{bmatrix} \end{array}$$

We note that the matrix is a symmetric matrix (symmetric with respect to the main diagonal of the matrix), which means that the adjacency matrix can represent an undirected graph. $\text{\color{#4257b2}Note: I will create an undirected graph that corresponds with the matrix, but you could also create a corresponding directed graph.\color{default}

\\

Since $a_{12} = 1$, there needs to be 2 edges between v_1 and v_2.

Since $a_{22} = 1$, there needs to be 1 loop at vertex v_2.

Since $a_{33} = 1$, there needs to be 1 loop at vertex v_3.}$

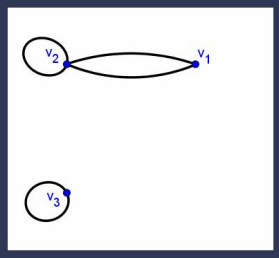

Result

4 of 4

See graphs

Exercise 4 Exercise 6

Exercise 6

Chapter 10, section 10.2, page 711

Discrete Mathematics with Applications
ISBN: 9781337694193

Table of contents

Solution

Verified

Step 1

1 of 4

DEFINITIONS

The **adjacency matrix** $\mathbf{A} = [a_{ij}]$ is $n \times n$ zero-one matrix with

$$a_{ij} = \begin{cases} 1 & \text{if there is an edge from } v_i \text{ to } v_j \\ 0 & \text{otherwise} \end{cases}$$

A graph is **connected** if there exists a walk between every pair of vertices.

Step 2

2 of 4

SOLUTION

(a)

$$\begin{bmatrix} 0 & 1 & 1 \\ 1 & 1 & 0 \\ 1 & 0 & 0 \end{bmatrix}$$

The given adjacency matrix is a 3×3-matrix, which implies that the corresponding graph contains 3 vertices. Let us name these vertices v_1, v_2, v_3.

$$\begin{array}{c} \\ v_1 \\ v_2 \\ v_3 \end{array} \begin{array}{c} \begin{array}{ccc} v_1 & v_2 & v_3 \end{array} \\ \begin{bmatrix} 0 & 1 & 1 \\ 1 & 1 & 0 \\ 1 & 0 & 0 \end{bmatrix} \end{array}$$

Since $a_{12} = 1$, vertices v_1 and v_2 are connected by an edge.

Since $a_{13} = 1$, vertices v_1 and v_3 are connected by an edge.

This then implies that there exists a walk between every pair of vertices from the vertices v_1, v_2 and v_3 (as all vertices are connected directly to v_1) and thus the corresponding graph is connected.

Step 3

3 of 4

(b)

$$\begin{bmatrix} 0 & 2 & 0 & 0 \\ 2 & 0 & 0 & 0 \\ 0 & 0 & 1 & 1 \\ 0 & 0 & 1 & 1 \end{bmatrix}$$

The given adjacency matrix is a 4×4-matrix, which implies that the corresponding graph contains 4 vertices. Let us name these vertices v_1, v_2, v_3, v_4.

$$\begin{array}{c} \\ v_1 \\ v_2 \\ v_3 \\ v_4 \end{array} \begin{array}{c} \begin{array}{cccc} v_1 & v_2 & v_3 & v_4 \end{array} \\ \begin{bmatrix} 0 & 2 & 0 & 0 \\ 2 & 0 & 0 & 0 \\ 0 & 0 & 1 & 1 \\ 0 & 0 & 1 & 1 \end{bmatrix} \end{array}$$

Since $a_{12} = 2$, vertices v_1 and v_2 are connected by an edge (by two different edges to be precise).

Since $a_{34} = 1$, vertices v_3 and v_4 are connected by an edge.

However, we note that there are no edges between a different pair of distinct vertices given by the adjacency matrix.

We then note that there does not exists a walk between v_1 and v_3, because v_1 is not connected to v_3 nor to v_4 by an edge and v_2 is not connected to v_3 nor to v_4 by an edge. Thus the corresponding graph is then not connected.

Result

4 of 4

(a) Connected

(b) Not connected

Exercise 5 Exercise 7

Exercise 7

Chapter 10, section 10.2, page 711

Discrete Mathematics with Applications
ISBN: 9781337694193

Table of contents

Solution

Verified

Step 1

1 of 3

DEFINITIONS

The **adjacency matrix** $\mathbf{A} = [a_{ij}]$ is $n \times n$ zero-one matrix with

$$a_{ij} = \begin{cases} 1 & \text{if there is an edge from } v_i \text{ to } v_j \\ 0 & \text{otherwise} \end{cases}$$

Step 2

2 of 3

SOLUTION

We know that the adjacency matrix contains a 0 for all entries in the ith row and the $i$the column (for all positive integers i).

$$a_{ii} = 0 \text{ for all integers } i$$

The adjacency matrix then contains only 0's on the main diagonal.

The main diagonal elements represents paths from a vertex v_i to the vertex v_i itself, which are thus loops at the vertex v_i.

$a_{ii} = 0$ for all integers i then implies that the graph contains no loops (thus no loops at all vertices).

Result

3 of 3

Graph contains no loops

Exercise 6 Exercise 8

Exercise 8

Chapter 10, section 10.2, page 711

Discrete Mathematics with Applications
ISBN: 9781337694193

Table of contents

Solution

Verified

Step 1

1 of 3

(a)

$$\begin{bmatrix} 2 & -1 \end{bmatrix} \begin{bmatrix} 1 \\ 3 \end{bmatrix}$$

The first matrix has dimensions 1×2 and the second matrix has dimension 2×1. Since the inner dimensions are equal, we can multiply the matrices.

Multiply the rows of the first matrix with the columns of the second matrix (adding the products of the corresponding elements):

$$\begin{bmatrix} 2 & -1 \end{bmatrix} \begin{bmatrix} 1 \\ 3 \end{bmatrix} = \begin{bmatrix} 2 \cdot 1 + (-1) \cdot 3 \end{bmatrix} = \begin{bmatrix} 2 - 3 \end{bmatrix} = \begin{bmatrix} -1 \end{bmatrix}$$

Step 2

2 of 3

(b)

$$\begin{bmatrix} 4 & -1 & 7 \end{bmatrix} \begin{bmatrix} 1 \\ 2 \\ 0 \end{bmatrix}$$

The first matrix has dimensions 1×3 and the second matrix has dimension 3×1. Since the inner dimensions are equal, we can multiply the matrices.

Multiply the rows of the first matrix with the columns of the second matrix (adding the products of the corresponding elements):

$$\begin{bmatrix} 4 & -1 & 7 \end{bmatrix} \begin{bmatrix} 1 \\ 2 \\ 0 \end{bmatrix} = \begin{bmatrix} 4 \cdot 1 + (-1) \cdot 2 + 7 \cdot 0 \end{bmatrix} = \begin{bmatrix} 4 - 2 + 0 \end{bmatrix} = \begin{bmatrix} 2 \end{bmatrix}$$

Result

3 of 3

(a)

$$\begin{bmatrix} -1 \end{bmatrix}$$

(b)

$$\begin{bmatrix} 2 \end{bmatrix}$$

Exercise 7 Exercise 9

Exercise 9

Chapter 10, section 10.2, page 711

Discrete Mathematics with Applications
ISBN: 9781337694193
Table of contents

Solution Verified

Step 1

1 of 3

Solution:

Recall the definition of the product of two matrices $A = (a_{ij})_{m\times k}$ and $B = (b_{ij})_{k\times n}$, we have that $A \cdot B = C = (c_{ij})_{m\times n}$ with

$$c_{ij} = \sum_{r=1}^{k} a_{ir} b_{rj}$$

$\boxed{a)}$ Let

$$A = \begin{bmatrix} 3 & 0 \\ 1 & -2 \end{bmatrix}_{2\times 2}$$

and

$$B = \begin{bmatrix} 1 & -1 & 4 \\ 0 & 2 & 1 \end{bmatrix}_{2\times 3}$$

. The product $A \cdot B$ is defined because the number of columns of A equals the number of rows of B. The result is $C_{2\times 3}$ with

$$C = \begin{bmatrix} 3\cdot 1 + 0\cdot 0 & 3\cdot(-1) + 0\cdot 2 & 3\cdot 4 + 0\cdot 1 \\ 1\cdot 1 + (-2)\cdot 0 & 1\cdot(-1) + (-2)\cdot 2 & 1\cdot 4 + (-2)\cdot 1 \end{bmatrix} = \begin{bmatrix} 3 & -3 & 12 \\ 1 & -5 & 2 \end{bmatrix}$$

$\boxed{b)}$ Let

$$A = \begin{bmatrix} 2 & 0 & 1 \\ 0 & -1 & 0 \end{bmatrix}_{2\times 3}$$

and

$$B = \begin{bmatrix} 1 & 3 \\ 5 & -4 \\ -2 & 2 \end{bmatrix}_{3\times 2}$$

. The product $A \cdot B$ is defined because the number of columns of A equals the number of rows of B. The result is $C_{2\times 2}$ with

$$C = \begin{bmatrix} 2\cdot 1 + 0\cdot 5 + 1\cdot(-2) & 2\cdot 3 + 0\cdot(-4) + 1\cdot 2 \\ 0\cdot 1 - 1\cdot 5 + 0\cdot(-2) & 0\cdot 3 - 1\cdot(-4) + 0\cdot 2 \end{bmatrix} = \begin{bmatrix} 0 & 8 \\ -5 & 4 \end{bmatrix}$$

$\boxed{c)}$ Here we have that

$$A = \begin{bmatrix} -1 \\ 2 \end{bmatrix}_{2\times 1}$$

and

$$B = \begin{bmatrix} 2 & 3 \end{bmatrix}_{1\times 2}$$

. The product $A \cdot B$ is defined because the number of columns of A equals the number of rows of B. The result is $C_{2\times 2}$ with

$$C = \begin{bmatrix} -1\cdot 2 & -1\cdot 3 \\ 2\cdot 2 & 2\cdot 3 \end{bmatrix} = \begin{bmatrix} -2 & -3 \\ 4 & 6 \end{bmatrix}$$

Step 2

2 of 3

$\boxed{d)}$ We have that

$$A = \begin{bmatrix} 1 & 2 \\ 3 & -1 \end{bmatrix}_{2\times 2}$$

and we have to calculate $A^2 = A \cdot A$. This product is defined since A is a quadratic matrix. The result is also $C_{2\times 2}$ with

$$C = \begin{bmatrix} 1\cdot 1 + 2\cdot 3 & 1\cdot 2 + 2\cdot(-1) \\ 3\cdot 1 - 1\cdot 3 & 3\cdot 2 - 1\cdot(-1) \end{bmatrix} = \begin{bmatrix} 7 & 0 \\ 0 & 7 \end{bmatrix}$$

Result

3 of 3

a)

$$\begin{bmatrix} 3 & -3 & 12 \\ 1 & -5 & 2 \end{bmatrix}$$

; \\\\\ b)

$$\begin{bmatrix} 0 & 8 \\ -5 & 4 \end{bmatrix}$$

;

c)

$$\begin{bmatrix} -2 & -3 \\ 4 & 6 \end{bmatrix}$$

; \\\\\ d)

$$\begin{bmatrix} 7 & 0 \\ 0 & 7 \end{bmatrix}$$

.

Exercise 8 Exercise 10

Exercise 10

Chapter 10, section 10.2, page 711

Discrete Mathematics with Applications
ISBN: 9781337694193
Table of contents

Solution

Verified

Step 1

1 of 11

Given

$$\mathbf{A} = \begin{bmatrix} 1 & 1 & -1 \\ 0 & -2 & 1 \end{bmatrix}$$
$$\mathbf{B} = \begin{bmatrix} -2 & 0 \\ 1 & 3 \end{bmatrix}$$
$$\mathbf{C} = \begin{bmatrix} 0 & -2 \\ 3 & 1 \\ 1 & 0 \end{bmatrix}$$

(a) The first matrix $\mathbf{A}$ has dimensions $2 \times$; and the second matrix $\mathbf{B}$ has dimension $\ \times 2$. Since the inner dimensions are not equal ($3 \neq 2$), the **product does not exist**.

Step 2

2 of 11

(b) The first matrix $\mathbf{B}$ has dimensions $2 \times$; and the second matrix $\mathbf{A}$ has dimension $\ \times 3$. Since the inner dimensions are equal, we can multiply the matrices. Moreover, the product should be a 2×3-matrix.

Multiply the rows of the first matrix with the columns of the second matrix (adding the products of the corresponding elements):

$$\begin{aligned}
\mathbf{BA} &= \begin{bmatrix} -2 & 0 \\ 1 & 3 \end{bmatrix} \begin{bmatrix} 1 & 1 & -1 \\ 0 & -2 & 1 \end{bmatrix} \\
&= \begin{bmatrix} (-2)\cdot 1 + 0\cdot 0 & (-2)\cdot 1 + 0\cdot(-2) & (-2)\cdot(-1) + 0\cdot 1 \\ 1\cdot 1 + 3\cdot 0 & 1\cdot 1 + 3\cdot(-2) & 1\cdot(-1) + 3\cdot 1 \end{bmatrix} \\
&= \begin{bmatrix} -2+0 & -2+0 & 2+0 \\ 1+0 & 1-6 & -1+3 \end{bmatrix} \\
&= \begin{bmatrix} -2 & -2 & 2 \\ 1 & -5 & 2 \end{bmatrix}
\end{aligned}$$

Step 3

3 of 11

(c) $\mathbf{A}^2$ implies the matrix product $\mathbf{A} \cdot \mathbf{A}$.

The first matrix $\mathbf{A}$ has dimensions $2 \times$; and the second matrix $\mathbf{A}$ has dimension $\ \times 3$. Since the inner dimensions are not equal ($3 \neq 2$), the **product does not exist**.

Step 4

4 of 11

(d) The first matrix $\mathbf{B}$ has dimensions $2 \times$; and the second matrix $\mathbf{C}$ has dimension $\ \times 2$. Since the inner dimensions are not equal ($2 \neq 3$), the **product does not exist**.

Step 5

5 of 11

(e) The first matrix $\mathbf{C}$ has dimensions $3 \times$; and the second matrix $\mathbf{B}$ has dimension $\ \times 2$. Since the inner dimensions are equal, we can multiply the matrices. Moreover, the product should be a 3×2-matrix.

Multiply the rows of the first matrix with the columns of the second matrix (adding the products of the corresponding elements):

$$\begin{aligned}
\mathbf{CB} &= \begin{bmatrix} 0 & -2 \\ 3 & 1 \\ 1 & 0 \end{bmatrix} \begin{bmatrix} -2 & 0 \\ 1 & 3 \end{bmatrix} \\
&= \begin{bmatrix} 0\cdot(-2) + (-2)\cdot 1 & 0\cdot 0 + (-2)\cdot 3 \\ 3\cdot(-2) + 1\cdot 1 & 3\cdot 0 + 1\cdot 3 \\ 1\cdot(-2) + 0\cdot 1 & 1\cdot 0 + 0\cdot 3 \end{bmatrix} \\
&= \begin{bmatrix} 0-2 & 0-6 \\ -6+1 & 0+3 \\ -2+0 & 0+0 \end{bmatrix} \\
&= \begin{bmatrix} -2 & -6 \\ -5 & 3 \\ -2 & 0 \end{bmatrix}
\end{aligned}$$

Step 6

6 of 11

(f) $\mathbf{B}^2$ implies the matrix product $\mathbf{B} \cdot \mathbf{B}$.

The first matrix $\mathbf{B}$ has dimensions $2 \times$; and the second matrix $\mathbf{B}$ has dimension $\ \times 2$. Since the inner dimensions are equal, we can multiply the matrices. Moreover, the product should be a 2×2-matrix.

Multiply the rows of the first matrix with the columns of the second matrix (adding the products of the corresponding elements).

$$\begin{aligned}
\mathbf{B}^2 = \mathbf{B}\cdot\mathbf{B} &= \begin{bmatrix} -2 & 0 \\ 1 & 3 \end{bmatrix} \begin{bmatrix} -2 & 0 \\ 1 & 3 \end{bmatrix} \\
&= \begin{bmatrix} (-2)\cdot(-2) + 0\cdot 1 & (-2)\cdot 0 + 0\cdot 3 \\ 1\cdot(-2) + 3\cdot 1 & 1\cdot 0 + 3\cdot 3 \end{bmatrix} \\
&= \begin{bmatrix} 4+0 & 0+0 \\ -2+3 & 0+9 \end{bmatrix} \\
&= \begin{bmatrix} 4 & 0 \\ 1 & 9 \end{bmatrix}
\end{aligned}$$

Step 7

7 of 11

(g) $\mathbf{B}^3$ implies the matrix product $\mathbf{B}^2 \cdot \mathbf{B}$.

The first matrix $\mathbf{B}^2$ has dimensions $2 \times$ (see part (f)) and the second matrix $\mathbf{B}$ has dimension $\ \times 2$. Since the inner dimensions are equal, we can multiply the matrices. Moreover, the product should be a 2×2-matrix.

Multiply the rows of the first matrix with the columns of the second matrix (adding the products of the corresponding elements):

$$\begin{aligned}
\mathbf{B}^3 = \mathbf{B}^2\cdot\mathbf{B} &= \begin{bmatrix} 4 & 0 \\ 1 & 9 \end{bmatrix} \begin{bmatrix} -2 & 0 \\ 1 & 3 \end{bmatrix} \\
&= \begin{bmatrix} 4\cdot(-2) + 0\cdot 1 & 4\cdot 0 + 0\cdot 3 \\ 1\cdot(-2) + 9\cdot 1 & 1\cdot 0 + 9\cdot 3 \end{bmatrix} \\
&= \begin{bmatrix} -8+0 & 0+0 \\ -2+9 & 0+27 \end{bmatrix} \\
&= \begin{bmatrix} -8 & 0 \\ 7 & 27 \end{bmatrix}
\end{aligned}$$

Step 8

8 of 11

(h) $\mathbf{C}^2$ implies the matrix product $\mathbf{C} \cdot \mathbf{C}$.

The first matrix $\mathbf{C}$ has dimensions $3 \times$; and the second matrix $\mathbf{C}$ has dimension $\ \times 2$. Since the inner dimensions are not equal ($2 \neq 3$), the **product does not exist**.

Step 9

9 of 11

(i) The first matrix $\mathbf{A}$ has dimensions $2 \times$; and the second matrix $\mathbf{C}$ has dimension $\ \times 2$. Since the inner dimensions are equal, we can multiply the matrices. Moreover, the product should be a 2×2-matrix.

Multiply the rows of the first matrix with the columns of the second matrix (adding the products of the corresponding elements):

$$\begin{aligned}
\mathbf{AC} &= \begin{bmatrix} 1 & 1 & -1 \\ 0 & -2 & 1 \end{bmatrix} \begin{bmatrix} 0 & -2 \\ 3 & 1 \\ 1 & 0 \end{bmatrix} \\
&= \begin{bmatrix} 1\cdot 0 + 1\cdot 3 + (-1)\cdot 1 & 1\cdot(-2) + 1\cdot 1 + (-1)\cdot 0 \\ 0\cdot 0 + (-2)\cdot 3 + 1\cdot 1 & 0\cdot(-2) + (-2)\cdot 1 + 1\cdot 0 \end{bmatrix} \\
&= \begin{bmatrix} 0+3-1 & -2+1+0 \\ 0-6+1 & 0-2+0 \end{bmatrix} \\
&= \begin{bmatrix} 2 & -1 \\ -5 & -2 \end{bmatrix}
\end{aligned}$$

Step 10

10 of 11

(j) The first matrix $\mathbf{C}$ has dimensions $3 \times$; and the second matrix $\mathbf{A}$ has dimension $\ \times 3$. Since the inner dimensions are equal, we can multiply the matrices. Moreover, the product should be a 3×3-matrix.

Multiply the rows of the first matrix with the columns of the second matrix (adding the products of the corresponding elements).

$$\begin{aligned}
\mathbf{CA} &= \begin{bmatrix} 0 & -2 \\ 3 & 1 \\ 1 & 0 \end{bmatrix} \begin{bmatrix} 1 & 1 & -1 \\ 0 & -2 & 1 \end{bmatrix} \\
&= \begin{bmatrix} 0\cdot 1 + (-2)\cdot 0 & 0\cdot 1 + (-2)\cdot(-2) & 0\cdot(-1) + (-2)\cdot 1 \\ 3\cdot 1 + 1\cdot 0 & 3\cdot 1 + 1\cdot(-2) & 3\cdot(-1) + 1\cdot 1 \\ 1\cdot 1 + 0\cdot 0 & 1\cdot 1 + 0\cdot(-2) & 1\cdot(-1) + 0\cdot 1 \end{bmatrix} \\
&= \begin{bmatrix} 0+0 & 0+4 & 0-2 \\ 3+0 & 3-2 & -3+1 \\ 1+0 & 1+0 & -1+0 \end{bmatrix} \\
&= \begin{bmatrix} 0 & 4 & -2 \\ 3 & 1 & -2 \\ 1 & 1 & -1 \end{bmatrix}
\end{aligned}$$

Result

11 of 11

(a) Product does not exist

(b)

$$\begin{bmatrix} -2 & -2 & 2 \\ 1 & -5 & 2 \end{bmatrix}$$

(c) Product does not exist

(d) Product does not exist

(e)

$$\begin{bmatrix} -2 & -6 \\ -5 & 3 \\ -2 & 0 \end{bmatrix}$$

(f)

$$\begin{bmatrix} 4 & 0 \\ 1 & 9 \end{bmatrix}$$

(g)

$$\begin{bmatrix} -8 & 0 \\ 7 & 27 \end{bmatrix}$$

(h) Product does not exist

(i)

$$\begin{bmatrix} 2 & -1 \\ -5 & -2 \end{bmatrix}$$

(j)

$$\begin{bmatrix} 0 & 4 & -2 \\ 3 & 1 & -2 \\ 1 & 1 & -1 \end{bmatrix}$$

Exercise 9 Exercise 11

Exercise 11

Chapter 10, section 10.2, page 711

Discrete Mathematics with Applications
ISBN: 9781337694193

Table of contents

Solution

Verified

Step 1

1 of 2

For example, let us choose the following two 2×2-matrices:

$$\mathbf{A} = \begin{bmatrix} 1 & 2 \\ 3 & 4 \end{bmatrix}$$
$$\mathbf{B} = \begin{bmatrix} 2 & 1 \\ 4 & 3 \end{bmatrix}$$

The first matrix has dimensions 2×2 and the second matrix has dimension 2×2. Since the inner dimensions are equal, we can multiply the matrices. Moreover, the product should be a 2×2-matrix.

Multiply the rows of the first matrix with the columns of the second matrix (adding the products of the corresponding elements):

$$\begin{aligned}
\mathbf{AB} &= \begin{bmatrix} 1 & 2 \\ 3 & 4 \end{bmatrix} \begin{bmatrix} 2 & 1 \\ 4 & 3 \end{bmatrix} \\
&= \begin{bmatrix} 1 \cdot 2 + 2 \cdot 4 & 1 \cdot 1 + 2 \cdot 3 \\ 3 \cdot 2 + 4 \cdot 4 & 3 \cdot 1 + 4 \cdot 3 \end{bmatrix} \\
&= \begin{bmatrix} 2 + 8 & 1 + 6 \\ 6 + 16 & 3 + 12 \end{bmatrix} \\
&= \begin{bmatrix} 10 & 7 \\ 22 & 15 \end{bmatrix} \\
\mathbf{BA} &= \begin{bmatrix} 2 & 1 \\ 4 & 3 \end{bmatrix} \begin{bmatrix} 1 & 2 \\ 3 & 4 \end{bmatrix} \\
&= \begin{bmatrix} 2 \cdot 1 + 1 \cdot 3 & 2 \cdot 2 + 1 \cdot 4 \\ 4 \cdot 1 + 3 \cdot 3 & 4 \cdot 2 + 3 \cdot 4 \end{bmatrix} \\
&= \begin{bmatrix} 2 + 3 & 4 + 4 \\ 4 + 9 & 8 + 12 \end{bmatrix} \\
&= \begin{bmatrix} 5 & 8 \\ 13 & 20 \end{bmatrix}
\end{aligned}$$

We then note $\mathbf{AB} \neq \mathbf{BA}$, which implies that the matrix multiplication is not commutative.

Result

2 of 2

Answers could vary

For example:

$$\mathbf{A} = \begin{bmatrix} 1 & 2 \\ 3 & 4 \end{bmatrix}$$

and

$$\mathbf{B} = \begin{bmatrix} 2 & 1 \\ 4 & 3 \end{bmatrix}$$

Exercise 10 Exercise 12

Exercise 12

Chapter 10, section 10.2, page 711

Discrete Mathematics with Applications
ISBN: 9781337694193

Table of contents

Solution

Verified

Step 1

1 of 2

Given:

$$O = \begin{bmatrix} 0 & 0 \\ 0 & 0 \end{bmatrix}$$

For example, let us choose the following two 2×2-matrices:

$$\mathbf{A} = \begin{bmatrix} 1 & 0 \\ 1 & 0 \end{bmatrix} \neq O$$
$$\mathbf{B} = \begin{bmatrix} 0 & 0 \\ 1 & 1 \end{bmatrix} \neq O$$

The first matrix has dimensions 2×2 and the second matrix has dimension 2×2. Since the inner dimensions are equal, we can multiply the matrices. Moreover, the product should be a 2×2-matrix.

Multiply the rows of the first matrix with the columns of the second matrix (adding the products of the corresponding elements):

$$\begin{aligned} \mathbf{AB} &= \begin{bmatrix} 1 & 0 \\ 1 & 0 \end{bmatrix} \begin{bmatrix} 0 & 0 \\ 1 & 1 \end{bmatrix} \\ &= \begin{bmatrix} 1 \cdot 0 + 0 \cdot 1 & 1 \cdot 0 + 0 \cdot 1 \\ 1 \cdot 0 + 0 \cdot 1 & 1 \cdot 0 + 0 \cdot 1 \end{bmatrix} \\ &= \begin{bmatrix} 0 + 0 & 0 + 0 \\ 0 + 0 & 0 + 0 \end{bmatrix} \\ &= \begin{bmatrix} 0 & 0 \\ 0 & 0 \end{bmatrix} \end{aligned}$$

We then note $\mathbf{AB} = O$.

Result

2 of 2

Answers could vary

For example:

$$\mathbf{A} = \begin{bmatrix} 1 & 0 \\ 1 & 0 \end{bmatrix}$$

and

$$\mathbf{B} = \begin{bmatrix} 0 & 0 \\ 1 & 1 \end{bmatrix}$$

Exercise 11 Exercise 13

Exercise 13

Chapter 10, section 10.2, page 711

Discrete Mathematics with Applications
ISBN: 9781337694193

Table of contents

Solution

Verified

Step 1

1 of 2

Given:

$$O = \begin{bmatrix} 0 & 0 \\ 0 & 0 \end{bmatrix}$$

For example, let us choose the following two 2×2-matrices:

$$\mathbf{A} = \begin{bmatrix} 0 & 0 \\ 1 & 1 \end{bmatrix} \neq O$$
$$\mathbf{B} = \begin{bmatrix} 1 & 0 \\ 1 & 0 \end{bmatrix} \neq O$$

The first matrix has dimensions 2×2 and the second matrix has dimension 2×2. Since the inner dimensions are equal, we can multiply the matrices. Moreover, the product should be a 2×2-matrix.

Multiply the rows of the first matrix with the columns of the second matrix (adding the products of the corresponding elements):

$$\begin{aligned}
\mathbf{AB} &= \begin{bmatrix} 0 & 0 \\ 1 & 1 \end{bmatrix} \begin{bmatrix} 1 & 0 \\ 1 & 0 \end{bmatrix} \\
&= \begin{bmatrix} 0 \cdot 1 + 0 \cdot 1 & 0 \cdot 0 + 0 \cdot 0 \\ 1 \cdot 1 + 1 \cdot 1 & 1 \cdot 0 + 1 \cdot 0 \end{bmatrix} \\
&= \begin{bmatrix} 0 + 0 & 0 + 0 \\ 1 + 1 & 0 + 0 \end{bmatrix} \\
&= \begin{bmatrix} 0 & 0 \\ 2 & 0 \end{bmatrix} \\
\mathbf{BA} &= \begin{bmatrix} 1 & 0 \\ 1 & 0 \end{bmatrix} \begin{bmatrix} 0 & 0 \\ 1 & 1 \end{bmatrix} \\
&= \begin{bmatrix} 1 \cdot 0 + 0 \cdot 1 & 1 \cdot 0 + 0 \cdot 1 \\ 1 \cdot 0 + 0 \cdot 1 & 1 \cdot 0 + 0 \cdot 1 \end{bmatrix} \\
&= \begin{bmatrix} 0 + 0 & 0 + 0 \\ 0 + 0 & 0 + 0 \end{bmatrix} \\
&= \begin{bmatrix} 0 & 0 \\ 0 & 0 \end{bmatrix}
\end{aligned}$$

We then note $\mathbf{AB} \neq O$ and $\mathbf{BA} = O$.

Result

2 of 2

Answers could vary

For example:

$$\mathbf{A} = \begin{bmatrix} 0 & 0 \\ 1 & 1 \end{bmatrix}$$

and

$$\mathbf{B} = \begin{bmatrix} 1 & 0 \\ 1 & 0 \end{bmatrix}$$

Exercise 12 Exercise 14

Exercise 14

Chapter 10, section 10.2, page 711

Discrete Mathematics with Applications
ISBN: 9781337694193

Table of contents

Solution

Verified

Step 1

1 of 2

Given: $\mathbf{I}$ is the $m \times m$ identity matrix and $\mathbf{A}$ is the $m \times n$ matrix

To proof: $\mathbf{IA} = \mathbf{A}$

$$\mathbf{PROOF}$$

By definition of a $m \times m$ identity-matrix: $\mathbf{I} = (\delta_{ij})$ with

$$\delta_{ij} = \begin{cases} 1 & \text{if } i = j \\ 0 & \text{if } i \neq j \end{cases}$$

for all $i, j = 1, 2, ..., m$

$$\begin{aligned}
(\mathbf{IA})_{ij} &= ij\text{th entry of } \mathbf{IA} \\
&= \sum_{r=1}^{n} \delta_{ir} a_{rj} \\
&= \delta_{i1} a_{1j} + \delta_{i2} a_{2j} + ... + \delta_{ii} a_{ij} + ... + \delta_{im} a_{1m} \\
&= 0 \cdot a_{1j} + 0 \cdot a_{2j} + ... + 1 \cdot a_{ij} + ... + 0 \cdot a_{1m} \\
&= a_{ij} \\
&= ij\text{th entry of } \mathbf{A} \\
&= (\mathbf{A})_{ij}
\end{aligned}$$

Since the ijth entry of $\mathbf{IA}$ is equal to the ijth entry of $\mathbf{A}$ for all $i, j = 1, 2, ..., m$

$$\mathbf{IA} = \mathbf{A}$$

$$\square$$

Result

2 of 2

Proof $\mathbf{IA} = \mathbf{A}$ by proving that the ijth element of $\mathbf{IA}$ is equal to the ijth element of $\mathbf{A}$.

Exercise 13 Exercise 15

Exercise 15

Chapter 10, section 10.2, page 711

Discrete Mathematics with Applications
ISBN: 9781337694193

Table of contents

Solution

Verified

Step 1

1 of 2

Given: $\mathbf{A}$ is an $m \times m$ symmetric matrix

To proof: $\mathbf{A}^2$ is symmetric

PROOF

Since $\mathbf{A} = (a_{ij})$ is an $m \times m$ symmetric matrix:

$$a_{ij} = a_{ji} \text{ for all } i, j = 1, 2, ..., m$$

Let us then determine if the elements of $\mathbf{A}^2 = (b_{ij})$ also satisfy the symmetric property ($b_{ij} = b_{ji}$).

$$\begin{aligned}
b_{ij} &= ij\text{th entry of } \mathbf{A}^2 \\
&= ij\text{th entry of } \mathbf{A} \cdot \mathbf{A} \\
&= \sum_{r=1}^{n} a_{ir} a_{rj} \\
&= \sum_{r=1}^{n} a_{ri} a_{jr} && a_{ij} = a_{ji} \text{ for all } i, j = 1, 2, ..., m \\
&= \sum_{r=1}^{n} a_{jr} a_{ri} && \text{Commutative property of multiplication of real numbers} \\
&= ji\text{th entry of } \mathbf{A} \cdot \mathbf{A} \\
&= ji\text{th entry of } \mathbf{A}^2 \\
&= b_{ji}
\end{aligned}$$

Since $b_{ij} = b_{ji}$ for all $i, j = 1, 2, ..., m$, $\mathbf{A}^2 = (b_{ij})$ is symmetric.

$\square$

Result

2 of 2

Proof that $\mathbf{A}^2 = (b_{ij})$ is symmetric by proving that $b_{ij} = bji$ using the commutative property of multiplication of real numbers and using that $\mathbf{A}$ is symmetric.

Exercise 14 Exercise 16

Exercise 16

Chapter 10, section 10.2, page 711

Discrete Mathematics with Applications
ISBN: 9781337694193

Table of contents

Solution

Verified

Step 1

1 of 2

Given: $\mathbf{A}$ is an $m \times k$ matrix, $\mathbf{B}$ is a $k \times r$ matrix and $\mathbf{C}$ is an $r \times n$ matrix.

To proof: $(\mathbf{AB})\mathbf{C} = \mathbf{A}(\mathbf{BC})$

$$\textbf{PROOF}$$

Let $\mathbf{A} = (a_{ij})$, $\mathbf{B} = (b_{ij})$, $\mathbf{C} = (c_{ij})$, $\mathbf{AB} = (d_{ij})$, $\mathbf{BC} = (e_{ij})$, $(\mathbf{AB})\mathbf{C} = (f_{ij})$, $\mathbf{A}(\mathbf{BC}) = (g_{ij})$.

We can then proof that $(\mathbf{AB})\mathbf{C} = \mathbf{A}(\mathbf{BC})$ by proving that $f_{ij} = g_{ij}$ for all $i = 1, 2, ..., m$ and for all $j = 1, 2, ..., n$.

$$\begin{aligned}
d_{ij} &= ij\text{th entry of } (\mathbf{AB})\mathbf{C} \\
&= \sum_{u=1}^{r} d_{iu} c_{uj} \\
&= \sum_{u=1}^{r} \left(\sum_{v=1}^{k} a_{iv} b_{vu} \right) c_{uj} \\
&= \sum_{u=1}^{r} \sum_{v=1}^{k} a_{iv} b_{vu} c_{uj} \\
&= \sum_{v=1}^{k} \sum_{u=1}^{r} a_{iv} b_{vu} c_{uj} \\
&= \sum_{v=1}^{k} a_{iv} \left(\sum_{u=1}^{r} b_{vu} c_{uj} \right) \\
&= \sum_{v=1}^{k} a_{iv} e_{vj} \\
&= ij\text{th entry of } \mathbf{A}(\mathbf{BC}) \\
&= g_{ij}
\end{aligned}$$

Since $f_{ij} = g_{ij}$ for all $i = 1, 2, ..., m$ and for all $j = 1, 2, ..., n$

$$(\mathbf{AB})\mathbf{C} = \mathbf{A}(\mathbf{BC})$$

$$\square$$

Result

2 of 2

Proof $(\mathbf{AB})\mathbf{C} = \mathbf{A}(\mathbf{BC})$ is symmetric by proving that the ijth element of $(\mathbf{AB})\mathbf{C}$ is equal to the ijth element of $\mathbf{A}(\mathbf{BC})$ for all $i = 1, 2, ..., m$ and for all $j = 1, 2, ..., n$.

Exercise 15 Exercise 17

Exercise 17

Chapter 10, section 10.2, page 711

Discrete Mathematics with Applications
ISBN: 9781337694193

Table of contents

Solution

Verified

Step 1

1 of 2

Given: $\mathbf{A}$ is an $m \times m$ matrix

To proof: $\mathbf{A}^n\mathbf{A} = \mathbf{A}\mathbf{A}^n$ for all integers $n \geq 1$

PROOF BY INDUCTION

Let $P(n)$ be "$\mathbf{A}^n\mathbf{A} = \mathbf{A}\mathbf{A}^n$"

Basis step $n = 1$

$$\mathbf{A}^n\mathbf{A} = \mathbf{A}^1\mathbf{A} = \mathbf{A}\mathbf{A} = \mathbf{A}\mathbf{A}^1 = \mathbf{A}\mathbf{A}^n$$

Thus $P(1)$ is true.

Inductive step Let $P(k)$ be true, thus $\mathbf{A}^k\mathbf{A} = \mathbf{A}\mathbf{A}^k$

We need to prove that $P(k+1)$ is true.

$$\begin{aligned}
\mathbf{A}^{k+1}\mathbf{A} &= (\mathbf{A}\mathbf{A}^k)\mathbf{A} && \text{Definition power of a matrix} \\
&= \mathbf{A}(\mathbf{A}^k\mathbf{A}) && \text{Associative property of matrices} \\
&= \mathbf{A}(\mathbf{A}\mathbf{A}^k) && \text{Since } P(k) \text{ is true} \\
&= \mathbf{A}\mathbf{A}^{k+1} && \text{Definition power of a matrix}
\end{aligned}$$

Thus $P(k+1)$ is true.

Conclusion By the principle of mathematical induction, $P(n)$ is true for all positive integers n.

$\square$

Result

2 of 2

Proof $\mathbf{A}^n\mathbf{A} = \mathbf{A}\mathbf{A}^n$ for all integers $n \geq 1$ by using a proof by mathematical induction.

Exercise 16 Exercise 18

Exercise 18

Chapter 10, section 10.2, page 711

Discrete Mathematics with Applications
ISBN: 9781337694193

Table of contents

Solution

Verified

Step 1

1 of 3

Given: $\mathbf{A}$ is an $m \times m$ symmetric matrix

To proof: $\mathbf{A}^n$ is a symmetric matrix for all integers $n \geq 1$

PROOF BY INDUCTION

Let $P(n)$ be "$\mathbf{A}^n$ is a symmetric matrix"

Basis step $n = 1$

$$\mathbf{A}^n = \mathbf{A}^1 = \mathbf{A}$$

Thus $P(1)$ is true, since we have been given that $\mathbf{A}$ is a symmetric matrix.

Inductive step Let $P(k)$ be true, thus $\mathbf{A}^k = (b_{ij})$ is a symmetric matrix.

We need to prove that $P(k+1)$ is true. Let $\mathbf{A}^{k+1} = (c_{ij})$.

Since $\mathbf{A} = (a_{ij})$ is an $m \times m$ symmetric matrix:

$$a_{ij} = a_{ji} \text{ for all } i, j = 1, 2, ..., m$$

Since $\mathbf{A}^k = (b_{ij})$ is an $m \times m$ symmetric matrix:

$$b_{ij} = b_{ji} \text{ for all } i, j = 1, 2, ..., m$$

Let us then determine if the elements of $\mathbf{A}^{k+1} = (c_{ij})$ also satisfy the symmetric property ($c_{ij} = c_{ji}$).

Step 2

2 of 3

$$\begin{aligned}
c_{ij} &= ij\text{th element of } \mathbf{A}^{k+1} \\
&= ij\text{th element of } \mathbf{A}\mathbf{A}^k && \text{Definition power of a matrix} \\
&= \sum_{r=1}^{n} a_{ir} b_{rj} \\
&= \sum_{r=1}^{n} a_{ir} b_{jr} && b_{ij} = b_{ji} \text{ for all } i, j = 1, 2, ..., m \\
&= \sum_{r=1}^{n} a_{ri} b_{jr} && a_{ij} = a_{ji} \text{ for all } i, j = 1, 2, ..., m \\
&= \sum_{r=1}^{n} b_{jr} a_{ri} && \text{Commutative property of multiplication of real numbers} \\
&= ji\text{th element of } \mathbf{A}^k\mathbf{A} \\
&= ji\text{th element of } \mathbf{A}\mathbf{A}^k && \text{Use result previous exercise} \\
&= ji\text{th element of } \mathbf{A}^{k+1} && \text{Definition power of a matrix} \\
&= c_{ji}
\end{aligned}$$

Thus $P(k+1)$ is true as $\mathbf{A}^{k+1} = (c_{ij})$ is a symmetric matrix.

Conclusion By the principle of mathematical induction, $P(n)$ is true for all positive integers n.

$\square$

Result

3 of 3

Proof $\mathbf{A}^n$ is a symmetric matrix for all integers $n \geq 1$ by using a proof by mathematical induction.

Exercise 17 Exercise 19

Exercise 19

Chapter 10, section 10.2, page 712

Discrete Mathematics with Applications
ISBN: 9781337694193
Table of contents

Solution Verified

Step 1

1 of 6

(a)

$$\mathbf{A} = \begin{bmatrix} 1 & 1 & 2 \\ 1 & 0 & 1 \\ 2 & 1 & 0 \end{bmatrix}$$

The first matrix $\mathbf{A}$ has dimensions 2×3 and the second matrix $\mathbf{A}$ has dimension 3×2. Since the inner dimensions are equal, we can multiply the matrices. Moreover, the product should be a 2×2-matrix.

Multiply the rows of the first matrix with the columns of the second matrix (adding the products of the corresponding elements):

$$\begin{aligned}
\mathbf{A}^2 = \mathbf{A} \cdot \mathbf{A} &= \begin{bmatrix} 1 & 1 & 2 \\ 1 & 0 & 1 \\ 2 & 1 & 0 \end{bmatrix} \begin{bmatrix} 1 & 1 & 2 \\ 1 & 0 & 1 \\ 2 & 1 & 0 \end{bmatrix} \\
&= \begin{bmatrix} 1 \cdot 1 + 1 \cdot 1 + 2 \cdot 2 & 1 \cdot 1 + 1 \cdot 0 + 2 \cdot 1 & 1 \cdot 2 + 1 \cdot 1 + 2 \cdot 0 \\ 1 \cdot 1 + 0 \cdot 1 + 1 \cdot 2 & 1 \cdot 1 + 0 \cdot 0 + 1 \cdot 1 & 1 \cdot 2 + 0 \cdot 1 + 1 \cdot 0 \\ 2 \cdot 1 + 1 \cdot 1 + 0 \cdot 2 & 2 \cdot 1 + 1 \cdot 0 + 0 \cdot 1 & 2 \cdot 2 + 1 \cdot 1 + 0 \cdot 0 \end{bmatrix} \\
&= \begin{bmatrix} 1 + 1 + 4 & 1 + 0 + 2 & 2 + 1 + 0 \\ 1 + 0 + 2 & 1 + 0 + 1 & 2 + 0 + 0 \\ 2 + 1 + 0 & 2 + 0 + 0 & 4 + 1 + 0 \end{bmatrix} \\
&= \begin{bmatrix} 6 & 3 & 3 \\ 3 & 2 & 2 \\ 3 & 2 & 5 \end{bmatrix}
\end{aligned}$$

Step 2

2 of 6

The first matrix $\mathbf{A}^2$ has dimensions 2×3 and the second matrix $\mathbf{A}$ has dimension 3×2. Since the inner dimensions are equal, we can multiply the matrices. Moreover, the product should be a 2×2-matrix.

Multiply the rows of the first matrix with the columns of the second matrix (adding the products of the corresponding elements):

$$\begin{aligned}
\mathbf{A}^3 = \mathbf{A} \cdot \mathbf{A}^2 &= \begin{bmatrix} 1 & 1 & 2 \\ 1 & 0 & 1 \\ 2 & 1 & 0 \end{bmatrix} \begin{bmatrix} 6 & 3 & 3 \\ 3 & 2 & 2 \\ 3 & 2 & 5 \end{bmatrix} \\
&= \begin{bmatrix} 1 \cdot 6 + 1 \cdot 3 + 2 \cdot 3 & 1 \cdot 3 + 1 \cdot 2 + 2 \cdot 2 & 1 \cdot 3 + 1 \cdot 2 + 2 \cdot 5 \\ 1 \cdot 6 + 0 \cdot 3 + 1 \cdot 3 & 1 \cdot 3 + 0 \cdot 2 + 1 \cdot 2 & 1 \cdot 3 + 0 \cdot 2 + 1 \cdot 5 \\ 2 \cdot 6 + 1 \cdot 3 + 0 \cdot 3 & 2 \cdot 3 + 1 \cdot 2 + 0 \cdot 2 & 2 \cdot 3 + 1 \cdot 2 + 0 \cdot 5 \end{bmatrix} \\
&= \begin{bmatrix} 6 + 3 + 6 & 3 + 2 + 4 & 3 + 2 + 10 \\ 6 + 0 + 3 & 3 + 0 + 2 & 3 + 0 + 5 \\ 12 + 3 + 0 & 6 + 2 + 0 & 6 + 2 + 0 \end{bmatrix} \\
&= \begin{bmatrix} 15 & 9 & 15 \\ 9 & 5 & 8 \\ 15 & 8 & 8 \end{bmatrix}
\end{aligned}$$

Step 3

3 of 6

(b) • The ijth element in $\mathbf{A}^2$ represents the number of walks from v_i to v_j of length 2.

We note that the element a_{13} of $\mathbf{A}^2$ is 3, which implies that there are 3 walks of length 2 from v_1 to v_3.

• The ijth element in $\mathbf{A}^3$ represents the number of walks from v_i to v_j of length 3.

We note that the element a_{13} of $\mathbf{A}^3$ is 15, which implies that there are 15 walks of length 3 from v_1 to v_3.

Step 4

4 of 6

(c)

$$\mathbf{A} = \begin{bmatrix} 1 & 1 & 2 \\ 1 & 0 & 1 \\ 2 & 1 & 0 \end{bmatrix}$$

The given adjacency matrix is a 3×3-matrix, which implies that the corresponding graph contains 3 vertices. Let us name these vertices v_1, v_2, v_3.

$$\begin{array}{c} \\ v_1 \\ v_2 \\ v_3 \end{array} \begin{array}{c} \begin{array}{ccc} v_1 & v_2 & v_3 \end{array} \\ \begin{bmatrix} 1 & 1 & 2 \\ 1 & 0 & 1 \\ 2 & 1 & 0 \end{bmatrix} \end{array}$$

We note that the matrix is a symmetric matrix (symmetric with respect to the main diagonal of the matrix), which means that the adjacency matrix can represent an undirected graph. $\text{\color{#4257b2}Note: I will create an undirected graph that corresponds with the matrix, but you could also create a corresponding directed graph.\color{default}

\\

Since $a_{11} = 1$, there needs to be 1 loop at vertex v_1.

Since $a_{12} = 1$, there needs to be 1 edge between v_1 and v_2.

Since $a_{13} = 2$, there need to be 2 edges between v_1 and v_3.

Since $a_{23} = 1$, there needs to be 1 edge between v_2 and v_3.}$

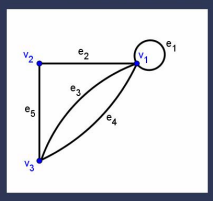

Step 5

5 of 6

We then note that the walks from v_3 to v_3 of length 2 are:

- $v_3 e_3 v_1 e_3 v_3$
- $v_3 e_3 v_1 e_4 v_3$
- $v_3 e_4 v_1 e_3 v_3$
- $v_3 e_4 v_1 e_4 v_3$
- $v_3 e_5 v_2 e_5 v_3$

We then note that there are 5 walks of length 2 from v_3 to v_3.

Note: the a_{33}-element of $\mathbf{A}^2$ in part (a) is 5, which confirms that there are 5 unique walks of length 2 fro

Result

6 of 6

(a)

$$\mathbf{A}^2 = \begin{bmatrix} 6 & 3 & 3 \\ 3 & 2 & 2 \\ 3 & 2 & 5 \end{bmatrix}$$

and

$$\mathbf{A}^3 = \begin{bmatrix} 15 & 9 & 15 \\ 9 & 5 & 8 \\ 15 & 8 & 8 \end{bmatrix}$$

(b)

3 walks of length 2 from v_1 to v_3.

15 walks of length 3 from v_1 to v_3.

(c) There are 5 unique walks of length 2 from v_3 to v_3.

Exercise 18 Exercise 20

Exercise 20

Chapter 10, section 10.2, page 712

Discrete Mathematics with Applications
ISBN: 9781337694193
Table of contents

Solution

Verified

Step 1

1 of 5

Let

$$\mathbf{A} = \begin{bmatrix} 0 & 1 & 1 & 0 \\ 1 & 0 & 2 & 1 \\ 1 & 2 & 0 & 1 \\ 0 & 1 & 1 & 1 \end{bmatrix}$$

(a) The ijth element in $\mathbf{A}^2$ represents the number of walks from v_i to v_j of length 2.

The first matrix $\mathbf{A}$ has dimensions 2×2 and the second matrix $\mathbf{A}$ has dimension 2×2. Since the inner dimensions are equal, we can multiply the matrices. Moreover, the product should be a 2×2-matrix.

Multiply the rows of the first matrix with the columns of the second matrix (adding the products of the corresponding elements):

$$\begin{aligned}
\mathbf{A}^2 = \mathbf{A} \cdot \mathbf{A} &= \begin{bmatrix} 0 & 1 & 1 & 0 \\ 1 & 0 & 2 & 1 \\ 1 & 2 & 0 & 1 \\ 0 & 1 & 1 & 1 \end{bmatrix} \begin{bmatrix} 0 & 1 & 1 & 0 \\ 1 & 0 & 2 & 1 \\ 1 & 2 & 0 & 1 \\ 0 & 1 & 1 & 1 \end{bmatrix} \\
&= \begin{bmatrix} 0\cdot 0+1\cdot 1+1\cdot 1+0\cdot 0 & 0\cdot 1+1\cdot 0+1\cdot 2+0\cdot 1 & 0\cdot 1+1\cdot 2+1\cdot 0+0\cdot 1 \\ 1\cdot 0+0\cdot 1+2\cdot 1+1\cdot 0 & 1\cdot 1+0\cdot 0+2\cdot 2+1\cdot 1 & 1\cdot 1+0\cdot 2+2\cdot 0+1\cdot 1 \\ 1\cdot 0+2\cdot 1+0\cdot 1+1\cdot 0 & 1\cdot 1+2\cdot 0+0\cdot 2+1\cdot 1 & 1\cdot 1+2\cdot 2+0\cdot 0+1\cdot 1 \\ 0\cdot 0+1\cdot 1+1\cdot 1+1\cdot 0 & 0\cdot 1+1\cdot 0+1\cdot 2+1\cdot 1 & 0\cdot 1+1\cdot 2+1\cdot 0+1\cdot 1 \end{bmatrix} \\
&= \begin{bmatrix} 0+1+1+0 & 0+0+2+0 & 0+2+0+0 & 0+1+1+0 \\ 0+0+2+0 & 1+0+4+1 & 1+0+0+1 & 0+0+2+1 \\ 0+2+0+0 & 1+0+0+1 & 1+4+0+1 & 0+2+0+1 \\ 0+1+1+0 & 0+0+2+1 & 0+2+0+1 & 0+1+1+1 \end{bmatrix} \\
&= \begin{bmatrix} 2 & 2 & 2 & 2 \\ 2 & 6 & 2 & 3 \\ 2 & 2 & 6 & 3 \\ 2 & 3 & 3 & 3 \end{bmatrix}
\end{aligned}$$

We note that the element a_{23} of $\mathbf{A}^2$ is 2, which implies that there are 2 walks of length 2 from v_2 to v_3.

Step 2

2 of 5

(b) Result part (a):

$$\mathbf{A}^2 = \begin{bmatrix} 2 & 2 & 2 & 2 \\ 2 & 6 & 2 & 3 \\ 2 & 2 & 6 & 3 \\ 2 & 3 & 3 & 3 \end{bmatrix}$$

We note that the element a_{34} of $\mathbf{A}^2$ is 3, which implies that there are 3 walks of length 2 from v_3 to v_4.

Step 3

3 of 5

(c) The ijth element in $\mathbf{A}^3$ represents the number of walks from v_i to v_j of length 3.

The first matrix $\mathbf{A}$ has dimensions 2×2 and the second matrix $\mathbf{A}^2$ has dimension 2×2. Since the inner dimensions are equal, we can multiply the matrices. Moreover, the product should be a 2×2-matrix.

Multiply the rows of the first matrix with the columns of the second matrix (adding the products of the corresponding elements):

$$\begin{aligned}
\mathbf{A}^3 = \mathbf{A} \cdot \mathbf{A}^2 &= \begin{bmatrix} 0 & 1 & 1 & 0 \\ 1 & 0 & 2 & 1 \\ 1 & 2 & 0 & 1 \\ 0 & 1 & 1 & 1 \end{bmatrix} \begin{bmatrix} 2 & 2 & 2 & 2 \\ 2 & 6 & 2 & 3 \\ 2 & 2 & 6 & 3 \\ 2 & 3 & 3 & 3 \end{bmatrix} \\
&= \begin{bmatrix} 0\cdot 2+1\cdot 2+1\cdot 2+0\cdot 2 & 0\cdot 2+1\cdot 6+1\cdot 2+0\cdot 3 & 0\cdot 2+1\cdot 2+1\cdot 6+0\cdot 3 \\ 1\cdot 2+0\cdot 2+2\cdot 2+1\cdot 2 & 1\cdot 2+0\cdot 6+2\cdot 2+1\cdot 3 & 1\cdot 2+0\cdot 2+2\cdot 6+1\cdot 3 \\ 1\cdot 2+2\cdot 2+0\cdot 2+1\cdot 2 & 1\cdot 2+2\cdot 6+0\cdot 2+1\cdot 3 & 1\cdot 2+2\cdot 2+0\cdot 6+1\cdot 3 \\ 0\cdot 2+1\cdot 2+1\cdot 2+1\cdot 2 & 0\cdot 2+1\cdot 6+1\cdot 2+1\cdot 3 & 0\cdot 2+1\cdot 2+1\cdot 6+1\cdot 3 \end{bmatrix} \\
&= \begin{bmatrix} 0+2+2+0 & 0+6+2+0 & 0+2+6+0 & 0+3+3+0 \\ 2+0+4+2 & 2+0+4+3 & 2+0+12+3 & 2+0+6+3 \\ 2+4+0+2 & 2+12+0+3 & 2+4+0+3 & 2+6+0+3 \\ 0+2+2+2 & 0+6+2+3 & 0+2+6+3 & 0+3+3+3 \end{bmatrix} \\
&= \begin{bmatrix} 4 & 8 & 8 & 6 \\ 8 & 9 & 17 & 11 \\ 8 & 17 & 9 & 11 \\ 6 & 11 & 11 & 9 \end{bmatrix}
\end{aligned}$$

We note that the element a_{14} of $\mathbf{A}^3$ is 6, which implies that there are 6 walks of length 3 from v_1 to v_4.

Step 4

4 of 5

(d) Result part (c):

$$\mathbf{A}^2 = \begin{bmatrix} 4 & 8 & 8 & 6 \\ 8 & 9 & 17 & 11 \\ 8 & 17 & 9 & 11 \\ 6 & 11 & 11 & 9 \end{bmatrix}$$

We note that the element a_{23} of $\mathbf{A}^3$ is 17, which implies that there are 17 walks of length 3 from v_2 to v_3.

Result

5 of 5

(a) 2

(b) 3

(c) 6

(d) 17

Exercise 19 Exercise 21

Exercise 21

Chapter 10, section 10.2, page 712

Discrete Mathematics with Applications
ISBN: 9781337694193
Table of contents

Solution Verified

Step 1

1 of 4

DEFINITIONS

The **adjacency matrix** $\mathbf{A} = [a_{ij}]$ is $n \times n$ zero-one matrix with

$$a_{ij} = \begin{cases} 1 & \text{if there is an edge from } v_i \text{ to } v_j \\ 0 & \text{otherwise} \end{cases}$$

A **complete graph** K_n $(n \geq 1)$ is a simple graph with n vertices and an edge between every pair of vertices.

Step 2

2 of 4

SOLUTION

Given:

$\mathbf{A}$ is the adjacency matrix for K_3

K_3 is a simple graph with 3 vertices and with an edge between every pair of vertices (but no loops).

To proof:

$$\mathbf{A}^n = \begin{bmatrix} a & b & b \\ b & a & b \\ b & b & a \end{bmatrix}$$

for some nonnegative integers a and b and for all integers $n \geq 1$

PROOF BY INDUCTION

Let $P(n)$ be "

$$\mathbf{A}^n = \begin{bmatrix} a & b & b \\ b & a & b \\ b & b & a \end{bmatrix}$$

for some nonnegative integers a and b"

Basis step $n = 1$

K_3 is a simple graph with 3 vertices and with an edge between every pair of vertices (but no loops).

Since K_3 contains no loops, the adjacency matrix $\mathbf{A}$ of K_3 will contain a 0 on the main diagonal elements.

Since there is an edge between every pair of distinct vertices of K_3, the adjacency matrix $\mathbf{A}$ of K_3 will contain a 1 on every non-main diagonal element.

$$\mathbf{A} = \begin{bmatrix} 0 & 1 & 1 \\ 1 & 0 & 1 \\ 1 & 1 & 0 \end{bmatrix}$$

Thus $P(1)$ is true, since $a = 0$ and $b = 1$.

Step 3

3 of 4

Inductive step Let $P(k)$ be true, thus

$$\mathbf{A}^k = \begin{bmatrix} a & b & b \\ b & a & b \\ b & b & a \end{bmatrix}$$

for some integers a and b.

We need to prove that $P(k+1)$ is true.

$$\begin{aligned}
\mathbf{A}^{k+1} &= \mathbf{A}\mathbf{A}^k \\
&= \begin{bmatrix} 0 & 1 & 1 \\ 1 & 0 & 1 \\ 1 & 1 & 0 \end{bmatrix} \cdot \begin{bmatrix} a & b & b \\ b & a & b \\ b & b & a \end{bmatrix} \\
&= \begin{bmatrix} 0 \cdot a + 1 \cdot b + 1 \cdot b & 0 \cdot b + 1 \cdot a + 1 \cdot b & 0 \cdot b + 1 \cdot b + 1 \cdot a \\ 1 \cdot a + 0 \cdot b + 1 \cdot b & 1 \cdot b + 0 \cdot a + 1 \cdot b & 1 \cdot b + 0 \cdot b + 1 \cdot a \\ 1 \cdot a + 1 \cdot b + 0 \cdot b & 1 \cdot b + 1 \cdot a + 0 \cdot b & 1 \cdot b + 1 \cdot b + 0 \cdot a \end{bmatrix} \\
&= \begin{bmatrix} 0 + b + b & 0 + a + b & 0 + b + a \\ a + 0 + b & b + 0 + b & b + 0 + a \\ a + b + 0 & b + a + 0 & b + b + 0 \end{bmatrix} \\
&= \begin{bmatrix} 2b & a + b & a + b \\ a + b & 2b & a + b \\ a + b & a + b & 2b \end{bmatrix}
\end{aligned}$$

Since a and b are nonnegative integers, $2b$ and $a + b$ are nonnegative integers as well and thus $P(k+1)$ is true.

Conclusion By the principle of mathematical induction, $P(n)$ is true for all positive integers n.

$\square$

Result

4 of 4

Proof

$$\mathbf{A}^n = \begin{bmatrix} a & b & b \\ b & a & b \\ b & b & a \end{bmatrix}$$

for some nonnegative integers a and b and for all integers $n \geq 1$ by using a proof by mathematical induction.

Exercise 20 Exercise 22

Exercise 22

Chapter 10, section 10.3, page 712

Discrete Mathematics with Applications
ISBN: 9781337694193

Table of contents

Solution

Verified

Step 1

1 of 8

DEFINITIONS

The **adjacency matrix** $\mathbf{A} = [a_{ij}]$ is $n \times n$ zero-one matrix with

$$a_{ij} = \begin{cases} 1 & \text{if there is an edge from } v_i \text{ to } v_j \\ 0 & \text{otherwise} \end{cases}$$

A **bipartite graph** is a simple graph whose vertices can be partitioned into two sets V_1 and V_2 such that there are no edges among the vertices of V_1 and no edges among the vertices of V_2, while there can be edges between a vertex of V_1 and a vertex of V_2.

Step 2

2 of 8

SOLUTION

(a)

$$\begin{bmatrix} 0 & 0 & 0 & 1 & 2 \\ 0 & 0 & 0 & 1 & 1 \\ 0 & 0 & 0 & 2 & 1 \\ 1 & 1 & 2 & 0 & 0 \\ 2 & 1 & 1 & 0 & 0 \end{bmatrix}$$

The given adjacency matrix is a 5×5-matrix, which implies that the corresponding graph contains 5 vertices. Let us name these vertices v_1, v_2, v_3, v_4, v_5.

$$\begin{array}{c} \\ v_1 \\ v_2 \\ v_3 \\ v_4 \\ v_5 \end{array} \begin{array}{c} \begin{array}{ccccc} v_1 & v_2 & v_3 & v_4 & v_5 \end{array} \\ \begin{bmatrix} 0 & 0 & 0 & 1 & 2 \\ 0 & 0 & 0 & 1 & 1 \\ 0 & 0 & 0 & 2 & 1 \\ 1 & 1 & 2 & 0 & 0 \\ 2 & 1 & 1 & 0 & 0 \end{bmatrix} \end{array}$$

We note that the matrix is a symmetric matrix (symmetric with respect to the main diagonal of the matrix), which means that the adjacency matrix can represent an undirected graph. $\textcolor{red}{\text{Note: I will create an undirected graph that corresponds with the matrix, but you could also create a corresponding directed graph}}$ $\textcolor{default}{}$

\\

Since $a_{14} = 1$, there needs to be 1 edge between v_1 and v_4

Since $a_{15} = 2$, there need to be 2 edges between v_1 and v_5

Since $a_{24} = 1$, there needs to be 1 edge between v_2 and v_4

Since $a_{25} = 1$, there needs to be 1 edge between v_2 and v_5

Since $a_{34} = 2$, there need to be 2 edges between v_3 and v_4

Since $a_{35} = 1$, there needs to be 1 edge between v_3 and v_5 jß

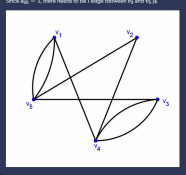

Step 3

3 of 8

The graph is **bipartite**, because if we let $V_1 = \{v_1, v_2, v_3\}$ and $V_2 = \{v_4, v_5\}$, then we note that all vertices in V_1 are connected to all vertices in V_2 by at least one edge and there are no edges among elements in V_1 nor among elements in V_2.

Step 4

4 of 8

(b) Proof: A graph with n vertices is bipartite if and only if its adjacency matrix has the form

$$\begin{bmatrix} \mathbf{O} & \mathbf{A} \\ \mathbf{A}' & \mathbf{O} \end{bmatrix}$$

for some labeling of the vertices with

$\mathbf{A}$ a $k \times (n-k)$ matrix for some integer k $(1 < k < n)$

$\mathbf{O}$ (top left) a $k \times k$ matrix whose entries are all 0

$\mathbf{A}'$ the transpose of $\mathbf{A}$

$\mathbf{O}$ (bottom right) a $(n-k) \times (n-k)$ matrix whose entries are all 0

PROOF

First part $\Rightarrow$

Let G be a bipartite graph with n vertices.

By the definition of bipartite, we can then partition the vertices of G into two sets $V_1 = \{v_1, v_2, ..., v_k\}$ and $V_2 = \{v_{k+1}, v_{k+2}, ..., v_{n-k}\}$ for some integer k such that $0 < k < n$ and such that there are no edges among elements of V_1 and there are no edges among elements of V_2 (while an edge between an element of V_1 and an elements of V_2 is possible).

Since we have n vertices, the corresponding adjacency matrix is a $n \times n$-matrix.

$$\begin{array}{c} \\ v_1 \\ v_2 \\ \vdots \\ v_k \\ v_{k+1} \\ \vdots \\ v_n \end{array} \begin{array}{c} \begin{array}{cccccccc} v_1 & v_2 & \cdots & v_k & v_{k+1} & \cdots & v_n \end{array} \\ \begin{bmatrix} \cdots & \cdots & \cdots & \cdots & \cdots & \cdots & \cdots & \cdots \\ \cdots & \cdots & \cdots & \cdots & \cdots & \cdots & \cdots & \cdots \\ \cdots & \cdots & \cdots & \cdots & \cdots & \cdots & \cdots & \cdots \\ \cdots & \cdots & \cdots & \cdots & \cdots & \cdots & \cdots & \cdots \\ \cdots & \cdots & \cdots & \cdots & \cdots & \cdots & \cdots & \cdots \\ \cdots & \cdots & \cdots & \cdots & \cdots & \cdots & \cdots & \cdots \\ \cdots & \cdots & \cdots & \cdots & \cdots & \cdots & \cdots & \cdots \end{bmatrix} \end{array}$$

Since there are no edges among elements of V_1, the elements of the matrix in rows corresponding $v_1, v_2, ..., v_k$ and in columns corresponding to $v_1, v_2, ..., v_k$ need to all be equal to 0.

Step 5

5 of 8

$$\begin{array}{c} \\ v_1 \\ v_2 \\ \vdots \\ v_k \\ v_{k+1} \\ \vdots \\ v_n \end{array} \begin{array}{c} \begin{array}{cccccccc} v_1 & v_2 & \cdots & v_k & v_{k+1} & v_{k+2} & \cdots & v_n \end{array} \\ \begin{bmatrix} 0 & 0 & \cdots & 0 & \cdots & \cdots & \cdots & \cdots \\ \cdots & \cdots & \cdots & 0 & \cdots & \cdots & \cdots & \cdots \\ \cdots & \cdots & \cdots & \cdots & \cdots & \cdots & \cdots & \cdots \\ 0 & 0 & \cdots & 0 & \cdots & \cdots & \cdots & \cdots \\ \cdots & \cdots & \cdots & \cdots & \cdots & \cdots & \cdots & \cdots \\ \cdots & \cdots & \cdots & \cdots & \cdots & \cdots & \cdots & \cdots \\ \cdots & \cdots & \cdots & \cdots & \cdots & \cdots & \cdots & \cdots \end{bmatrix} \end{array}$$

Since there are no edges among elements of V_2, the elements of the matrix in rows corresponding $v_{k+1}, v_{k+2}, ..., v_{n-k}$ and in columns corresponding to $v_{k+1}, v_{k+2}, ..., v_{n-k}$ need to all be equal to 0.

$$\begin{array}{c} \\ v_1 \\ v_2 \\ \vdots \\ v_k \\ v_{k+1} \\ \vdots \\ v_n \end{array} \begin{array}{c} \begin{array}{cccccccc} v_1 & v_2 & \cdots & v_k & v_{k+1} & v_{k+2} & \cdots & v_n \end{array} \\ \begin{bmatrix} 0 & 0 & \cdots & 0 & \cdots & \cdots & \cdots & \cdots \\ \cdots & \cdots & \cdots & 0 & \cdots & \cdots & \cdots & \cdots \\ \cdots & \cdots & \cdots & \cdots & \cdots & \cdots & \cdots & \cdots \\ 0 & 0 & \cdots & 0 & \cdots & \cdots & \cdots & \cdots \\ \cdots & \cdots & \cdots & \cdots & 0 & 0 & \cdots & 0 \\ \cdots & \cdots & \cdots & \cdots & 0 & 0 & \cdots & 0 \\ \cdots & \cdots & \cdots & \cdots & 0 & 0 & \cdots & 0 \end{bmatrix} \end{array}$$

Thus we then note that the adjacency matrix is of the form

$$\begin{bmatrix} \mathbf{O} & \mathbf{A} \\ \mathbf{B} & \mathbf{O} \end{bmatrix}$$

with $\mathbf{O}$ (top left) a $k \times k$ matrix whose entries are all 0 and $\mathbf{O}$ (bottom right) a $(n-k) \times (n-k)$ matrix whose entries are all 0.

Moreover, since a bipartite graph is a simple graph, the graph contains no directed edges and thus if there is an edge from v_i to v_j, then there is also an edge between v_j and v_i. This then implies that $a_{ij} = a_{ji}$ for all $1 \leq i \leq n$ (a_{ij} is the ijth element of the adjacency matrix) and thus the adjacency matrix is symmetric. However, this then implies that the adjacency matrix is of the form

$$\begin{bmatrix} \mathbf{O} & \mathbf{A} \\ \mathbf{A}' & \mathbf{O} \end{bmatrix}$$

with $\mathbf{A}$ a $k \times (n-k)$ matrix and $\mathbf{A}'$ the transpose of $\mathbf{A}$.

Step 6

6 of 8

Second part $\Leftarrow$

Let G be a graph whose adjacency matrix has the form

$$\begin{bmatrix} \mathbf{O} & \mathbf{A} \\ \mathbf{A}' & \mathbf{O} \end{bmatrix}$$

for some labeling of the vertices with

$\mathbf{A}$ a $k \times (n-k)$ matrix for some integer k $(1 < k < n)$

$\mathbf{O}$ (top left) a $k \times k$ matrix whose entries are all 0

$\mathbf{A}'$ the transpose of $\mathbf{A}$

$\mathbf{O}$ (bottom right) a $(n-k) \times (n-k)$ matrix whose entries are all 0.

The given adjacency matrix is a $n \times n$-matrix, which implies that the corresponding graph contains n vertices.

Let us name these vertices $v_1, v_2, ..., v_k, v_{k+1}, v_{k+2}, ..., v_n$.

$$\begin{array}{c} \\ v_1 \\ v_2 \\ \vdots \\ v_k \\ v_{k+1} \\ \vdots \\ v_n \end{array} \begin{array}{c} \begin{array}{cccccccc} v_1 & v_2 & \cdots & v_k & v_{k+1} & v_{k+2} & \cdots & v_n \end{array} \\ \begin{bmatrix} 0 & 0 & \cdots & 0 & a_{1,k+1} & a_{1,k+2} & \cdots & a_{1,n} \\ \cdots & \cdots & \cdots & 0 & a_{2,k+1} & a_{2,k+2} & \cdots & a_{2,n} \\ \cdots & \cdots & \cdots & \cdots & \cdots & \cdots & \cdots & \cdots \\ 0 & 0 & \cdots & 0 & a_{k,k+1} & a_{k,k+2} & \cdots & a_{k,n} \\ a_{1,k+1} & a_{2,k+1} & \cdots & a_{k,k} & 0 & 0 & \cdots & 0 \\ a_{1,k+2} & a_{2,k+2} & \cdots & a_{k,n} & 0 & 0 & \cdots & 0 \\ \cdots & \cdots & \cdots & \cdots & \cdots & \cdots & \cdots & \cdots \\ a_{1,n} & a_{2,k+2} & \cdots & a_{k,n} & 0 & 0 & \cdots & 0 \end{bmatrix} \end{array}$$

Let us then define $V_1 = \{v_1, v_2, ..., v_k\}$ and $V_2 = \{v_{k+1}, v_{k+2}, ..., v_n\}$.

We then note that there are no edges among vertices in V_1, because the adjacency matrix contains 0's in the rows with $v_1, v_2, ..., v_k$ and in the columns with $v_1, v_2, ..., v_k$.

We then note that there are no edges among vertices in V_2, because the adjacency matrix contains 0's in the rows with $v_{k+1}, v_{k+2}, ..., v_n$ and in the columns with $v_{k+1}, v_{k+2}, ..., v_n$.

Moreover, it is possible that there are edges between an element of V_1 and an element of V_2. The graph is a simple graph as well, because the adjacency matrix is a symmetric matrix. This then implies that the graph corresponding to the adjacency matrix is a bipartite graph (where V_1 and V_2 is a possible partitioning of the vertices).

Step 7

7 of 8

Conclusion Combining the result of the first and second part, we have then shown that a graph with n vertices is bipartite if and only if its adjacency matrix has the form

$$\begin{bmatrix} \mathbf{O} & \mathbf{A} \\ \mathbf{A}' & \mathbf{O} \end{bmatrix}$$

for some labeling of the vertices with

$\mathbf{A}$ a $k \times (n-k)$ matrix for some integer k $(1 < k < n)$

$\mathbf{O}$ (top left) a $k \times k$ matrix whose entries are all 0

$\mathbf{A}'$ the transpose of $\mathbf{A}$

$\mathbf{O}$ (bottom right) a $(n-k) \times (n-k)$ matrix whose entries are all 0

$\square$

Result

8 of 8

(a) Bipartite

(b) Proof: A graph with n vertices is bipartite if and only if its adjacency matrix has the form

$$\begin{bmatrix} \mathbf{O} & \mathbf{A} \\ \mathbf{A}' & \mathbf{O} \end{bmatrix}$$

for some labeling of the vertices with

$\mathbf{A}$ a $k \times (n-k)$ matrix for some integer k $(1 < k < n)$

$\mathbf{O}$ (top left) a $k \times k$ matrix whose entries are all 0

$\mathbf{A}'$ the transpose of $\mathbf{A}$

$\mathbf{O}$ (bottom right) a $(n-k) \times (n-k)$ matrix whose entries are all 0

by using the definition of a bipartite graph.

< Exercise 21 Exercise 23 >

Exercise 23

Chapter 10, section 10.2, page 712

Discrete Mathematics with Applications
ISBN: 9781337694193
Table of contents

Solution Verified

Step 1

1 of 5

DEFINITIONS

The **adjacency matrix** $\mathbf{A} = [a_{ij}]$ is $n \times n$ zero-one matrix with

$$a_{ij} = \begin{cases} 1 & \text{if there is an edge from } v_i \text{ to } v_j \\ 0 & \text{otherwise} \end{cases}$$

A graph is **connected** if there exists a path between every pair of vertices.

Step 2

2 of 5

SOLUTION

(a) Given:

G is a graph with n vertices

v and w are distinct vertices of G.

To proof: If there is a walk from v to w, then there is a walk from v to w that has length less than or equal to $n-1$.

PROOF

Let us assume that there exists a walk W from v to w and let the length of this walk be m.

If $m \leq n-1$, then W is a walk of length less than or equal to $n-1$ and thus then the proof would be complete. Let us then assume that $m \geq n$.

Since the walk W has length m with $m \geq n$. This then implies that the walk W contains $m+1$ vertices with $m+1 \geq n+1$ and thus the walk W contains at least $n+1$ vertices. However, this then implies that there is at least one repeated vertex w' in the walk W (as G contains n vertices). Let us then remove the walk between the two occurrences of the repeated vertex w' and rename the resulting walk as W'.

If W' has length less than or equal to $n-1$, then W' is a walk from v to w of length less than or equal to $n-1$ and thus then the proof would be complete. If W' has length less than or equal to $n-1$, then W' again needs to contain a repeated vertex w'' and we again remove the walk between the two occurrences of the repeated vertex w'', resulting in a new walk W''.

Continuing this procedure, we need to obtain a walk W^* with length less than or equal to $n-1$ at some point (as the walk cannot contain an infinite number of repeated vertices, since a walk is a finite sequence of vertices and edges).

$\square$

Step 3

3 of 5

(b) Given:

G is a graph with n vertices with $n > 1$

$\mathbf{A}$ is adjacency matrix of G.

To proof: G is connected if and only if every entry of $\mathbf{A} + \mathbf{A}^2 + \ldots + \mathbf{A}^{n-1}$ is positive.

PROOF

First part $\Rightarrow$

Let G be connected and let the n vertices of G be $v_1, v_2, \ldots, v_n$.

By the definition of connected, there exists a walk between every pair of vertices.

Moreover, by part (a), we know that there then also exists a walk between every pair of vertices such that the walk has length less than or equal to $n-1$.

However, if there exists a walk of length m with $1 \leq m \leq n-1$ between vertices v_i and v_j $(1 \leq i, j \leq n)$, then the ijth element of $\mathbf{A}^m$ is positive and thus the ijth element of $\mathbf{A} + \mathbf{A}^2 + \ldots + \mathbf{A}^m + \ldots + \mathbf{A}^{n-1}$ is then positive as well (since $\mathbf{A}^k$ $(1 \leq k \leq n-1)$ contain only nonnegative elements as an element represents the number of walks of length k between two vertices).

Since there exists a walk between every pair of vertices such that the walk has length less than or equal to $n-1$, this then implies that each element of $\mathbf{A} + \mathbf{A}^2 + \ldots + \mathbf{A}^m + \ldots + \mathbf{A}^{n-1}$ needs to be positive.

Step 4

4 of 5

Second part $\Leftarrow$

Let every entry of $\mathbf{A} + \mathbf{A}^2 + \ldots + \mathbf{A}^{n-1}$ be positive. Let v and w be vertices of G.

The entry in $\mathbf{A} + \mathbf{A}^2 + \ldots + \mathbf{A}^{n-1}$ corresponding to the vertices v and w is then positive. However, $\mathbf{A}^k$ $(1 \leq k \leq n-1)$ contains only nonnegative elements as an element represents the number of walks of length k between two vertices and thus there exists an integer m such that $1 \leq m \leq n-1$ for which the entry in $\mathbf{A}^m$ corresponding to the vertices v and w is positive.

This then implies that there exists at least one walk from v to w of length m.

However, for any two vertices v and w in G, we then obtain that there needs to exist at least one walk from v to w and thus the graph G needs to be connected.

Conclusion Combining the result of the first and second part, we have then shown that G is connected if and only if every entry of $\mathbf{A} + \mathbf{A}^2 + \ldots + \mathbf{A}^{n-1}$ is positive.

$\square$

Result

5 of 5

(a) Proof that "if there is a walk from v to w, then there is a walk from v to w that has length less than or equal to $n-1$." by showing that if a walk has a length of at least n, then the walk needs to contain a repeated vertex and thus we can then remove the walk between the two occurrences of the repeated vertex to obtain a shorter walk (until we obtain a walk with length less than or equal to $n-1$)

(b) Proof that "G is connected if and only if every entry of $\mathbf{A} + \mathbf{A}^2 + \ldots + \mathbf{A}^{n-1}$ is positive" by using the fact that an entry of $\mathbf{A}^k$ represents the number of walks of length k between the two corresponding vertices.

Exercise 22 Exercise 1