31. Time and progress chart are known as
   a. bar chart
   b. modified milestone chart
   c. critical path method
   d. all of these
32. The jobs going ahead of schedule are conveniently shown in
   a. milestone chart
   b. pie chart
   c. Gantt chart
   d. none of these
33. The earliest method used for planning of project was
   a. bar chart
   b. CPM
   c. PERT
   d. milestone chart
34. PERT stands for
   a. Program Estimation and Reporting Technique
   b. Process Estimation and Review Technique
   c. Program Evaluation and Review Technique
   d. Planning Estimation and Resulting Technique
35. Actual performance of a task is called
   a. An activity
   b. An event
   c. A duration
   d. None of these
36. The start or completion of a task is called
   a. an activity
   b. an event
   c. a duration
   d. none of these
37. An activity requires
   a. events
   b. resources
   c. time and resources
   d. energy
38. Travel chart are used to
   a. analyze material handling
   b. determine inventory control difficulties
   c. plan material handling procedure and routes
   d. all of these
39. An activity is
   a. an element of work entailed in the project
   b. the beginning or end of a specified job
   c. the movement of heavy vehicles form one place to another
   d. the progress of work upto a certain limit
40. CPM is
   a. event oriented
   b. activity oriented
   c. time oriented
   d. resources oriented
41. CPM stands for
   a. Combined Process Method
   b. Common Path Method
   c. Critical Path Method
   d. Critical Process Method
42. PERT
   a. provides an approach for keeping planning up to date
   b. Provides a way for management to require that planning be done on a uniform and logical basis
   c. Permits management to foresee quickly the impact of variations from the plan
   d. all of these
43. CPM requires
   a. single time estimate
   b. double time estimate
   c. triple time estimate
   d. none of these
44. Probabilistic time for completion of any activity can be found out from
   a. optimistic time
   b. pessimistic time
   c. most likely time
   d. all of these
45. PERT requires
   a. single time estimate
   b. double time estimate
   c. triple time estimate
   d. none of these
46. PERT analysis is based upon
   a. optimistic time
   b. pessimistic time
   c. most likely time
   d. all of these
47. The optimistic time represents?
   a. shortest possible time in which an activity can be completed if everything goes exceptionally well
   b. time in which the activity is normally expected to complete under normal contingences
   c. time in which an activity will take to complete in case of difficulty
   d. none of the above

Scanned with CamScanner

The first disbursement occurs at the end of year 2
The second disbursement occurs at the end of year 4
The first receipt occurs at the end of year 1
The second receipt occurs at the end of year 3
All of these

Pick up the correct statement from the following:

Uniform series compound amount factor $= \left[\frac{(1+i)^n - 1}{i}\right]$

Uniform series present worth factor $= \left[\frac{(1+i)^n - 1}{i(1+i)^n}\right]$

Sinking fund factor $= \left[\frac{i}{(1+i)^n - 1}\right]$

Capital recovery factor $= \left[\frac{i}{1-(1+i)^{-n}}\right]$ where letters carry their usual meanings.

c. All of these

The owner of the construction company makes use of the estimate :

a. to determine the capital investment costs.
b. to assist in financial arrangements
c. to determine economic feasibility of the project.
d. to determine the tax, insurance and evaluation purpose.
e. All of these

The person desires to pay off the amount in 10 equal annual instalments. The amount of each instalment is :

a. Rs 5638 b. Rs 6638 c. Rs 7738 d. None of these

Keeping in view, the feasibility order of magnitude, the preliminary, conceptual or budget estimates, are prepared by :

a. architect/engineer b. construction manager
c. owner himself/herself d. construction manager
e. None of these

The shortest possible time in which an activity can be achieved under ideal circumstances is known as_____

a. Pessimistic time estimate b. Optimistic time estimate
c. Expected time estimate d. The most likely time estimate

According to the time estimates made by the PERT planners, the maximum time that would be needed to complete an activity is called as _____

a. The most likely time estimate b. Optimistic time estimate
c. Pessimistic time estimate d. Expected time estimate

Which of the following is not a phase of project management?

a. Project planning b. Project scheduling c. Project controlling d. Project being

Who introduced the bar charts?

a. Williams henry b. Henry Gantt c. Jane Gantt d. Joseph henry

The function of Nepal Engineering Council is to:

a. Enforce engineering profession code of conduct
b. regulate the required standard of educational facilities of engineering colleges
c. Registered and issue license to engineers
d. all of the above

In bar charts, which colour is used to show the actual progress?

a. Red b. Black c. Blue d. Green

Earning per share is the most important ratio for

a. share holders b. banks
c. company's management d. All of these

Scanned with CamScanner

56. A _____ is solid bounded only by plane surfaces (faces).
a. square b. rectangle c. regular polyhedron d. triangle

57. _____ are multi-view technical drawings that contain special views of a part or parts, that reveal interior features.
a. 3d drawing b. Isometric drawing c. Hatched drawing d. Sectional drawings

58. When a plane surface is inclined to any plane of projection, the view of the plane surface projected on it will be its _____
a. point shape b. true shape c. straight line d. apparent shape

59. When a plane is perpendicular to a reference plane, its projection on that plane is a
a. straight line b. true line c. apparent line d. point

60. The cross-section perpendicular to the base but not through the vertex of a square pyramid will be a _____
a. square b. triangle c. trapezoid d. rectangle

61. The Diagonal cross section of a cylinder obtained as shown in figure will be _____

a. circle b. ellipse c. hyperbola d. spherical

62. The isometric view of the figure will resemble what type of structure?

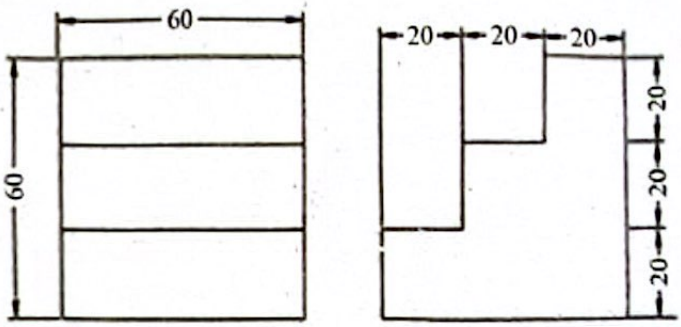

a. A chair b. A staircase c. A table d. A column

63. The term _____ stems from its use in illustrations by the furniture industry.
a. cavalier projection b. axonometric projection
c. cabinet projection d. dimetric projection

64. These are points at which the edges of the object appear to be converging. This point is seen at eye level, ie. on HP are _____
a. Station point b. Piercing point c. Exit point d. Vanishing point

65. Which information is required to draw the perspective?
a. Top View and Front View (or Side View of) the object
b. Orientation and location of the object w.r.t the PPP
c. Location of station point S w.r.t to PPP and GL
d. Angle of projection

66. A variant of _____ is called military projection.
a. 3- projection b. Orthographic projection
c. Isometric projection d. Oblique projection

67. It is a vertical projection plane used to obtain the object's Perspective is _____
a. orthographic plane b. vertical plane
c. perspective picture plane d. horizontal plane

Scanned with CamScanner

8. **Name Registration Certificate to be Issued:** The Registrar shall register in The Registration Book the name of the applicant in respect of whom a decision is taken to Register the name by the Council pursuant to section 15, and shall issue the Name registration Certificate to the applicant in a format as prescribed.

9. **Name to be removed from the Registration Book:**
   1. Except in the following circumstances, the name of a registered engineer shall not be removed from the Registration Book:-
      a. If he becomes mentally unsound.
      b. If his property has been divided proportionally among the creditors for having failed to pay the debts due to the creditor.(If he becomes bankrupt),
      c. If a motion submitted to a meeting of the Council to remove his name from the Registration Book on the charge of violating the professional code of conduct as prescribed is passed by a two-thirds majority,
      d. If he is convicted by a court in a criminal charge involving moral turpitude,
      e. If the name of a person who does not possess the required qualifications has happened to be registered by fraud or error.
   2. Prior to the submission of the motion to remove the name of any registered engineer from the Registration Book on a charge as referred to in clauses (c) and (e) of sub-section (1) to a meeting of the Council, the Council shall constitute an inquiry committee requiring to submit a report after having conducted an inquiry in regard to the charge imposed on such a person.
   3. The procedures to be followed by the Inquiry Committee constitute under sub-section (2) while conducting the inquiry shall be as prescribed.

mary

C **Act 2055**

1. Number of chapter: 7
2. Number of clauses: 38
3. Amendment on (लागु भएको): 2079/05/05
4. Current Registrar: Er. Shiw Mangal Giri
5. First President: Er. Ram Babu Sharma
6. First Registrar: Er. Bindeshwor Yadav

Multiple Choice Questions

1. What is the provision in NEC Act and Regulation in Nepal for the punishment if a person practices Engineering work without registering into the NEC
   a. Rs 1000 fine or imprisonment of 1 month or both
   b. Rs 5000 fine
   c. RS 10000 fine
   d. Rs 3000 fine or imprisonment of 3 month or both
2. Professional code of conduct issued by Nepal Engineering Council has
   a. 5 articles b. 6 articles c. 7 articles d. 8 articles
3. The general experience required for the nominations of chairperson of Nepal Engineeering Council after receiving Master's degree is
   a. 10 years b. 15 years c. 20 years d. None of the above
4. In general, Nepal Engineering council meeting per year should be held
   a. one times b. two times c. three times d. four times
5. Any non-Nepali Engineer desiring to work in Nepal may apply for registration under
   a. Category A b. Category B c. Category C d. Category D

Scanned with CamScanner

Here, higher % of income tax is applied only for additional amount e.g. for married couple with Rs. 9 lakhs income total tax is Rs. 46,000 (= 6,000+20,000+20,000) i.e. 1% for 6 lakhs + 10% for additional 2 lakhs + 20% for other additional 1 lakh.

- Tax Rate for Non-resident Natural Person for Normal transactions is 25%.
- Foreign permanent establishment repatriating income is taxed at 5%.
- Tax rate for non-resident entity providing water or air transport services in Nepal is 2% if the destination is within the territory of Nepal. But if the destination is outside of Nepal then the tax rate is 5%. Also, if these entities are providing telecommunication services in Nepal, the tax rate is 5%.
- Tax rate for general tax entities is 25%.
- Tax rates for cooperatives registered as per Cooperatives Act 2049 located at Municipality, Sub-Metropolitan city and Metropolitan city is 7.5%, 10%, and 15% respectively for fiscal year 2079/80.
- Tax rate for specific entity (such as banks and finance, insurance company, telecommunication and internet service, money transfer business, petroleum business, securities company, share broker, capital market business and community future market) is 30%.
- Tax rate for schools and universities registered as Guthis is 20%.
- 1 % tax is charged for entities earning foreign income by outsourcing business.
- Tax on dividend (any income remitted to the head office) at 5%.
- Profits remitted to foreign entities are taxed as follows:
  a. Dividends = 5%
  b. Interest = 15%
  c. Royalties = 15%
  d. Capital gains on disposal of shares will be subject to normal corporate tax rate.

Multiple Choice Questions

1. It is the series of equal payments occurring at equal interval of time.
   a. Amortization b. Annuity c. Debt d. Deposit
2. It is a series of payments occurring at equal interval of time where the payments are made at the beginning of each time period
   a. Annuity due b. Deferred annuity c. Ordinary annuity d. Perpetuity
3. It is a series of payments occurring at equal interval of time where the payments are made at the end of each time period
   a. Annuity due b. Deferred annuity c. Ordinary annuity d. Perpetuity
4. The financial statement showing a firm's accounting value on particular date is
   a. income statement b. statement of cash flow
   c. balance sheet d. none
5. A current asset is
   a. an item currently owned by the firm
   b. an item that the firm expects to own within the next year
   c. an item currently owned by the firm that will convert to cash within the next 12 months
   d. the amount of cash on hand the firm currently shows on its balance sheet
6. Net working capital is defined as
   a. current assets minus current liabilities
   b. total assets minus total liabilities
   c. fixed assets minus long-term liabilities
   d. total liabilities minus shareholder's equity
7. A(n)..... asset is one which can be quickly converted into cash without significant loss n value.
   a. current b. liquid b. fixed d. intangible
8. ..... refers to the cash flow that results from the firm's ongoing, normal business activities.
   a. Capital spending b. Net working capital
   b. Cash flow from assets d. Cash flow from operating activities

Scanned with CamScanner

48. The time in which an activity will take to complete in case of difficulty, is called?
a. optimistic time b. pessimistic time c. most likely time d. none of these

49. In CPM, cost slope is determined by
a. crash cost / normal cost
b. normal cost / crash cost
c. (crash cost – normal cost) / (normal time – crash time)
d. (normal cost – crash cost) / (normal time – crash time)

50. The probabilistic time is given by (where t_o = optimistic time, t_p = pessimistic time, and t_m = most likely time)
a. $(t_o + t_p + t_m) / 3$ b. $(t_o + 2t_p + t_m) / 4$ c. $(t_o + 4t_p + t_m) / 6$ d. $(t_o + t_p + 4t_m) / 6$

51. Slack represents the difference between the
a. earliest completion time and latest allowable time
b. latest allowable time and earliest completion time
c. earliest completion time and normal expected time
d. latest allowable time and normal allowable time

52. The amount of time by which the activity can be delayed without interfering with the start of succeeding activity is known as
a. duration b. free float c. total float d. interfering float

53. total activity slack is equal to
a. Latest start time – Earliest start time
b. Latest finish time – Earliest finish time
c. Latest allowable event occurrence time – Earliest finish time
d. all of these

54. The earliest finish time of an activity is the ..... of early start time and duration of activity
a. difference b. product c. ratio d. sum

55. The difference between total float and free float is equal to
a. interfering float b. duration c. critical activity d. none of these

56. The estimated time required to complete an activity is known as
a. float b. duration c. restraint d. all of these

57. A critical activity has
a. maximum float b. minimum float c. zero float d. average float

58. Critical path method
a. helps in ascertaining time schedules
b. Makes better and detailed planning possible
c. Provides a standard method for communicating project plans schedules and to time and cost performance
d. all of these

59. The occurrence of the completion of an activity, is called its
a. head event b. tail event c. dual role event d. none of these

60. The occurrence of the starting of an activity, is called its
a. head event b. tail event c. dual role event d. none of these

61. Which of the following is a dummy activity?
a. Excavation of foundation b. laying of foundation concrete
c. awaiting the arrival of concrete material d. curing of foundation concrete

62. A dummy activity in a net work
a. is represented by a dotted line b. is an artificial activity
c. does not consume any time and resources d. all of these

63. Dummy activities are used to
a. maintain the required net work b. determine the project completion time
c. determine the critical path d. none of these

Scanned with CamScanner

While assessing your project processes, you have identified some uncontrolled process variations. Which of the following would be the appropriate chart you may use for this purpose?

a. Pareto diagram b. PERT chart c. Control chart d. Critical path

Once the project is approved and moves into the planning stage, what happens in the next phase of the project life cycle?

a. Agreements for risk sharing need to be concluded.
b. The total risk on the project typically reduces as activities are performed without loss.
c. Risks must be weighed against the potential benefit of the project's success in order to decide if the project should be chosen.
d. Risks are identified with each major group of activities.

Why does the creation of processes for developing teams, establishing priorities, and distributing work and tasks require different sets of skills?

Select one:

a. Because resources on the project management team may view it as permanent
b. Because resources on the project management team may view it as temporary
c. Because resources on the project team are not aware of the technical aspects of the initiative
d. Because members of the project management team are not aware of the knowledge and skills of the other people working on the project

According to the Project Management Institute (PMI), project management is defined as "the application of knowledge, _____, _____, and techniques to project activities to meet the project requirements". Select one:

a. skills, analysis b. analysis, theories c. skills, tools d. skills, theories

Under which of the following conditions would teams be more effective than individuals?

a. When speed is important
b. When the activities involved in solving the problem are very detailed
c. When the actual document needs to be written
d. When innovation is required

Fill in the blank. There is_____ correlation between project complexity and project risk. Select one:

a. an unknown b. a positive c. no d. a negative

As a new project manager, Karen was worried about a statement from her client: "your project deliverable is in low quality with low grade". According to PMBOK, how can you help Karen distinguish the differences between "quality" and "grade"?

a. Quality and grade represent the same thing.
b. Low quality can never be a problem, but low grade is.
c. Low quality represents a true problem, but low grade might not be the case.
d. Low quality with high grade is always desirable to your client. e. High quality always represents high grade.

What is the first step in developing a risk management plan?

a. Analyze the risks. b. Estimate the likelihood of the risks occurring.
c. Identify potential project risks. d. Develop a risk mitigation plan.

After Marta obtained her PMP certificate, her boss assigned her to be in charge of a long-term project, which a recently resigned project manager, Todd, had been working on for three years. When Marta looks at historical information that Todd achieved for this project, which of the following is deemed most critical for Marta to manage her project team?

a. Project contract b. Detailed activity lists and WBS dictionary
c. Legal documents d. Project lessons

Complete the following statement. As a project manager, Darrell is excited that he is assigned to be in charge of the most important project this year. After being chartered for the project, he analyzes the information in the project charter and the stakeholder register to:

a. decide how to draft a scope statement.
b. start to define and develop the stakeholder needs and requirement.
c. prepare for the template to monitor project progress.
d. estimate the entire project budget.

Scanned with CamScanner

68. It is the line drawn through the station point and perpendicular to the picture plane. It is also called axis of vision or line of sight or _____
   a. Station point b. X-axis c. Perpendicular axis d. Z-axis
69. When the receding lines are true length, and the projectors are at 45 degrees to the plane of projection, the oblique drawing is called _____
   a. oblique projection b. isometric projection
   c. axonometric projection d. cavalier projection
70. Oblique sections are useful to show the _____
   a. interior shapes b. oblique lines
   c. foreshortened features d. projected features
71. In the_____ method, the points on the perspective are obtained by projecting the top view with either the front view or the side view of the visual rays.
   a. vector b. concurrent c. visual ray d. straight line
72. An orthographic projection map is a map projection of _____
   a. Sphere b. Earth c. Cartography d. Top view
73. When an object is viewed from different directions and at different distances, the appearance of the object will be different. Such view is called_____
   a. oblique projection b. perspective view
   c. axonometric projection d. isometric projection
74. In perspective projection, all lines of sight start at a _____ point.
   a. double b. triple c. multiple d. single
75. The ratio obtained by dividing 'quick assests' by current liabilities is called
   a. Turnover ratio b. Acid test ratio c. Solvency ratio d. None of these.
76. Pick up the element of the cost from the following:
   a. direct material b. direct labour c. Over head d. All of these
77. Which one of the following is included in financial ratios of the firm ?
   a. Profitability ratio b. Liquidity ratio
   c. Turnover ratio d. Ratio of overall performances
   e. All of these
78. The sunk costs include :
   a. a past expenditure b. an unrecovered balance
   c. an invested capital that cannot be retreived d. All of these
79. Current assests less inventories divided by current liabilities is known as
   a. Liquidity ratio b. Current ratio
   c. Acid-Test (or Quick) ratio d. Debts ratio
80. Refer to the cash flow diagram of uniform gradient in a cash flow (in the given figure), the gradient is :

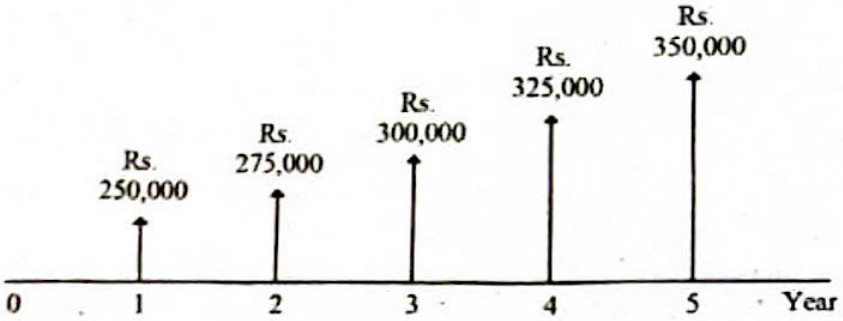

   a. Rs 10000 per year b. Rs 15000 per year
   c. Rs 20000 per year d. Rs 25000 per year
81. The alternatives which are standalone solutions for given situations in engineering involve :
   a. a purchase cost (first cost)
   b. the anticipated life of the assest
   c. the yearly costs of maintaining the assest (annual maintenance and operating cost)
   d. the anticipated resaleable value (salvage value) and the interest return (rate of return)
   e. All of these

Scanned with CamScanner

128. Pick up the main purpose of project cost control from the following :
   a. To signal immediate warning of uneconomic operations
   b. To provide a feed back to the estimator
   c. To promote cost consciousness
   d. All of these

129. _____ are used to represent activity in a network diagram.
   a. Circles b. Squares c. Rectangles d. Arrows

130. The difference between the maximum time available and the actual time needed to perform an activity is known as _____
   a. Free float b. Independent floatc. Total float d. Half float

131. Gita deposits Rs 1200 now, Rs 800 two years from now and Rs 1000 five years from now. If the savings bank's rate of interest in 5%, she will receive an amount of Rs X 10 years from now, where X is
   a. Rs 3415 b. Rs 4225 c. Rs 4413 d. Rs 4826

132. The full form of PERT is _____
   a. Program Evaluation and Rate Technology b. Program Evaluation and Robot Technique
   c. Program Evaluation and Robot Technology **d. Program Evaluation and Review Technique**

133. The full form of CPM is _____
   a. Critical Path Method b. Control Path Method
   c. Critical Plan Management d. Control Path Management

134. If P is principal amount, i is the rate of interest per annum and n is the number of periods in years, the compound amount factor (CAF) is :
   a. $(1+i)^n$ b. $(1+i)^{(1/2n)}$ c. $(n+i)$ d. None of these

135. As a project manager, Tyler is so happy that all expected project deliverable have been accomplished by his project team. What is the next step for his project to proceed in order to verify the project scope by his project client?
   Select one:
   a. Ask his client to pay for the completed project deliverables.
   b. Award all of his project team members for such a great accomplishment.
   c. Offer a party for his project team and client to celebrate the success of the project.
   d. Ask his client to conduct an inspection on all of the completed project deliverables.

136. According to Bruce Tuckman's five stages of team development, project team members compete for control at which stage?
   a. Forming b. Storming c. Norming d. Performing

137. The project management office (PMO) handles all of the following functions EXCEPT:
   a. maintaining the organization's project management policies and procedures.
   b. supervising the project managers.
   c. **assigning project managers from other departments but not procuring contract project managers.**
   d. monitoring project performance.
   e. providing functional support to projects like project scheduling and project cost analysis

138. What is the first step in project planning?
   a. Establish the objectives and scope. b. Determine the budget.
   c. Select the team organizational model. d. Determine project constraints.

139. Risk must be considered in the _____ phase and weighed against the potential benefit of the project's success in order to decide if the project should be chosen.
   a. completion b. execution c. planning d. initiation

140. Due to the rapid expansion of your company, your boss decides to establish a project management office (PMO) within the company and asks you to take the lead. According to the PMBOK guide, to be the ideal PMO you can do which of the following?
   a. Speed up a specific ongoing project.
   b. Find opportunities for collaborative project management.
   c. Reassign the resources that have been assigned to ongoing projects.
   d. Reduce the assigned resources to existing projects.

Scanned with CamScanner

6. The number of executive members in Nepal Engineering's Association are
   a. 5 b. 10 c. 20 d. 25
7. The total number of members in Nepal Engineering council is
   a. 15 b. 22 c. 21 d. 18
8. Nepal Engineering Council is an autonomous body formed under
   a. NEC Act 2054 B.S b. NEC Act 2055 B.S
   c. NEC Act 2056 B.S d. NEC Act 2057 B.S
9. Nepal Engineering Council Act has been recently amended which is __ amendment.
   a. First b. Second c. Third d. Fourth
10. Tenure of nominated or elected members in NEC is
   a. 1year b. 2 years c. 3 years d. 4 years
11. How many sections are there in NEC act
   a. 18 b. 28 c. 38 d. 48
12. NEC Act 2055 guided with _ numbers professional code of conduct for engineers.
   a. 5 b. 6 c. 7 d. 8

Answer Key

1.d	2.d	3.b	4.d	5.c	6.a	7.c	8.b	9.a	10.d	11.c	12.d

10.6.2 Various Engineering Category

1. **Civil Engineering**
   a. General b. Highway c. Sanitary
   d. Building and Architect e. Irrigation f. Hydrology
   g. Hydro-power h. Airport
2. **Electrical**
   a. General Electrical b. Aviation Electrical
3. **Electronic and Communication**
4. **Mechanical**
   a. General Mechanical b. Aviation Mechanical
   c. Construction Equipment Repair and Maintenance
5. **Aeronautical**
6. **Mining**
7. **Chemical**
8. **Metallurgical**
9. **Metrology**
10. **Meteorology**
11. **Geology**
   a. General b. Hydro-geology c. Engineering Geology
12. **Civil Aviation Operation and Engineering**
   a. Civil Aviation Operation b. Flight Operation c. Aviation Fire Services
13. **Survey**
14. **Chemistry**
15. **Agri-irrigation Engineering**

Scanned with CamScanner

64. The probability of completion of any activity within its expected time is
a. 26.7% b. 50% c. 66.7% d. 100%

65. Various activities of project are shown on bar chart by
a. vertical lines b. dots c. horizontal lines d. crosses

66. Which of the following are the guidelines for the construction of a network diagram?
a. Each activity is represented by one and only arrow in the network
b. dangling must be avoided in a network diagram
c. dummy activity consume no time or resources
d. all of these

67. The time with which direct cost does not reduce with the increase in time is known as
a. Normal time b. Optimistic time c. Crash time d. Standard time

68. An activity of the project is graphically represented by ..... on the network diagram
a. A circle b. an arrow c. a straight line d. any of these

69. The direct cost of the project with respect to normal time is
a. zero b. maximum c. minimum d. infinite

70. The reduction in project time normally results in
a. Decreasing the direct cost and increasing indirect cost
b. Increasing the direct cost and indirect cost both
c. Decreasing the direct cost and indirect cost both
d. Increasing the direct cost and decreasing the indirect cost

Answers Key

1.a	2.d	3.a	4.d	5.b	6.d	7.b	8.d	9.c	10.d	11.b	12.d	13.b	14.d	15.a
16.d	17.d	18.d	19.d	20.a	21.c	22.c	23.c	24.c	25.c	26.c	27.c	28.d	29.d	30.d
31.d	32.c	33.a	34.c	35.a	36.b	37.c	38.d	39.a	40.b	41.c	42.d	43.a	44.d	45.c
46.d	47.a	48.b	49.c	50.d	51.a	52. b	53. d	54.d	55.a	56.b	57.c	58.d	59.a	60.b
61.c	62.d	63.a	64.b	65.c	66.d	67.a	68.b	69.c	70.d					

10.4 Project Management

Project management is the application of processes, methods, knowledge, skills and experience to achieve the project objectives.

10.4.1 Information System

What is a project?

- A project is an activity that :
  - is temporary having a start and end date.
  - is unique.
  - brings about change.
  - has unknown elements, which therefore create risk.
  - Generally projects are formed to solve a problem or take advantage of an opportunity.

Scanned with CamScanner

106. The project contractor relies on the cost of the estimate :
   a. for submission of a competitive bid for a lumpsum contract
   b. for a unit price contract
   c. for preparation of a definitive estimate to help negotiate contract.
   d. All of these

107. Pick up the correct method adopted for developing the approximate or conceptual estimates from the following :
   a. Base unit method
   b. Cost per function method
   c. Cost per square metre
   d. Cost per linear unit
   e. All of these

108. Each financial ratio is generally compared by
   a. a past ratio calculated from the past financial standard of the firm.
   b. a ratio developed by using the projected financial statement of the firm.
   c. a ratio of some selected firms most progressive and successful at the point of consideration.
   d. All of these

109. The wages of supervisors and material handlers are charged as :
   a. Over head
   b. direct labour cost
   c. indirect labour cost
   d. None of these

110. The CRF (ep) is also known as: [CRF(EP) – 8% – 7], where
   a. 8% is the rate of interest per year
   b. money is borrowed for n = 7 years
   c. both (a) and (b)
   d. Neither (a) nor (b)

111. The financial analysis :
   a. helps a share holder to compare the expected return on his investment in the firm against the expected return from other alternative investment.
   b. helps a bank to know the financial position of the firm for granting a loan to the firm.
   c. helps to judge the success of the firm's financial plans.
   d. All of these.

112. Which one of the following is not a construction estimate ?
   a. Initial feasibility estimate
   b. Conceptual preliminary budget
   c. Definite estimate
   d. None of these

113. A project construction cost estimate includes:
   a. the labour and material cost
   b. the equipment and over head cost
   c. the profit of the contractor
   d. All of these

114. Pick up the method used for project evaluation and selection in capital budgetting from the following:
   a. pay back period
   b. Internal ratio of return
   c. Net present worth
   d. Profitability index
   e. All the above

115. Pick up the correct statement from the following:
   a. The ratio of current assests, loans and advances, and the current liquidity is called current ratio.
   b. Larger the current ratio, larger is the margin of safety.
   c. The operating profit is the difference between gross profit and operating expenses.
   d. All of these

116. In the cash flow diagram shown in the given figure

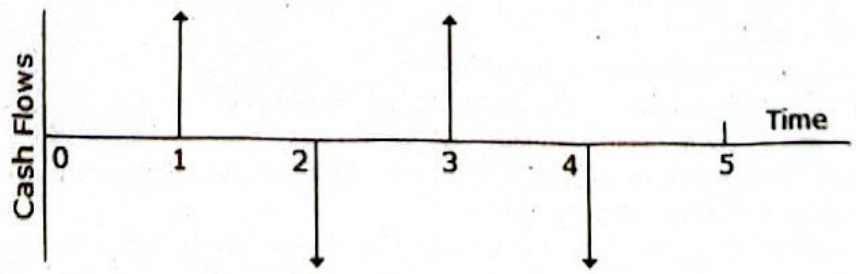

Scanned with CamScanner

18. For the preparation of a construction schedule, the data required is
   a. number of operations
   b. number of activities
   c. output of labor
   d. all of these
19. The use of bar chart is very popular in construction departments because
   a. it is very simple to prepare and interpret
   b. each item of work or activity is shown separately
   c. modification to the chart, if required, can be carried out easily
   d. all of these
20. The chart which gives an estimate about the amount of materials handling between various work stations is known as
   a. travel chart
   b. flow chart
   c. process chart
   d. operation chart
21. The bar chart is known as
   a. flow chart
   b. time chart
   c. Gantt chart
   d. travel chart
22. A bar chart is drawn for
   a. activity versus resources
   b. resources versus progress
   c. time versus activity
   d. progress versus time
23. A drawback of the bar chart is that
   a. all the activity are independent of each other
   b. it is difficult to judge whether an activity is completed or not
   c. the sequence of activities is not clearly defined
   d. all of these
24. Which of the following statement is correct in bar chart planning?
   a. The progress of work can be measured.
   b. The spare time of the activities can be determined.
   c. The inter dependence of the operations cannot be portrayed.
   d. The schedule cannot be updated.
25. A milestone chart
   a. depicts the delay of job
   b. shows the inter dependence of various jobs
   c. shows the events in chronological, but not in a logical sequence
   d. all of these
26. Milestone chart is an improvement over
   a. PERT
   b. CPM
   c. bar chart
   d. all of these
27. A Gantt chart indicates
   a. balance of work to be done
   b. efficiency of project work
   c. comparison of actual process with the scheduled progress
   d. progress cost of project
28. In functional organization
   a. quality of work is better
   b. wastage of material is minimum
   c. specialized knowledge and guidance to individual worker is provided
   d. all of the above
29. The salient feature of the organization evolved by F.W. Taylor is
   a. strict adherence to specification
   b. separation of planning and design part for field work
   c. each individual maintains functional efficiency
   d. all of these
30. The major principal of organization is
   a. span of management
   b. unity of command
   c. delegation of authority
   d. all of these

Scanned with CamScanner

f. One Campus Chief nominated by His Majesty's Government from amongst the Campus Chiefs of the Engineering Colleges. – Member – 1

g. Representative, Institute of Engineering, Tribhuvan University – Member – 1

h. Representative from the universities teaching engineering in Nepal, nominated by Government – 1

i. Two Engineers nominated by the Council – Member – 2

j. Registrar – Member-Secretary (Er. Shiw Mangal Giri) – 1

ii. While making the nomination and conducting election of the Member in accordance with clauses (c) and (e) of the sub-section (1), such nomination and election are required to be made or conducted from separate subjects of the engineering profession on the subject-wise basis.

iii. Until election is held for the Members as referred to in clause (e) of sub-section (1), the engineers nominated by the Nepal Engineers Association shall be the Member of the council.

iv. In making nomination for the representative in accordance with clause (g) of sub-section (1), such nomination shall be made from amongst the engineers.

v. The council may, if it deems it necessary, invite any expert to participate at the meetings of the council.

4. **The Tenure of Office of the Members**:

i. The tenure of office of the Members nominated or elected to the Council shall be four years. The Members whose tenure of office has expired may be re-nominated or re-elected, subject to the other provisions laid down in this Act.

ii. If any seat of a Member falls vacant prior to the expiry of the tenure of office, the seat of the Member so fallen vacant shall be filled through nomination or election of another member for the remainder of the tenure.

5. **Circumstances to Terminate the Membership**:

The membership of the Council shall be deemed to have been terminated in the following circumstances:-

a. If he is disqualified under Section 7.

b. If the resignation tendered form the office of the Member is accepted,

c. If he, without giving prior notice with the reasons to the Council, absents himself from the meetings of the Council for three consecutive times,

d. If he dies

6. **Functions, Duties and Powers of the Council:** In addition to the functions, duties and powers set forth elsewhere in this Act, the Council shall have the functions, duties and powers as follows:

a. To prepare and implement the policy, plan and programs as required for carrying out the engineering profession in a proper manner.

b. To recognize, as prescribed, the academic institutions providing the engineering education and certificates and degrees granted by such institutions.

c. To determine the qualifications required for practicing the engineering profession and to register as prescribed with the Council the names of the persons having possessed the specified qualifications.

d. If a registered engineer violates the professional code of conduct as prescribed or does not comply with it, to remove the name of such engineer from the Council by fulfilling the procedures as prescribed.

7. **Registration of Name**: If the Council considers it appropriate to register in the Council the name of the applicant recommended by the Subject Committee for the registration of name after having conducted necessary examination in accordance with Section 14, it shall decide to register the name of such applicant in the Registration Book of the Council prepared in format as prescribed.

Scanned with CamScanner

Multiple Choice Questions

1. The construction of residential buildings are treated as
   a. light construction b. heavy construction
   c. industrial construction d. none of these
2. The main function of construction management is
   a. planning b. organizing c. directing d. all of the above
3. The first stage of large construction work is to
   a. conception b. contract c. design d. study and evaluation
4. Each work should be planned with respect to
   a. manner of execution of work b. urgency of work
   c. availability of resources d. all the above
5. The conception of idea for any construction work is the responsibility of
   a. engineer b. owner c. contractor d. all of these
6. A construction team includes
   a. owner b. engineer c. architect d. all of these
7. Military type of organization is known as
   a. functional organization b. line organization
   c. line and staff organization d. none of these
8. The field of activities of an engineer includes
   a. estimation
   b. approval of construction plans by the local authority
   c. inspection and payment of work done by contractor
   d. all of the above
9. In a line organization
   a. discipline is strong b. responsibility of each individual is strong
   c. quick decision are taken d. all of these
10. The contractor is responsible for
    a. procuring material which is not supplied by the owner
    b. organizing and planning the work as per drawing
    c. executing the work as per specifications laid down in the contract
    d. all of the above
11. F.W Taylor introduced a system of organization known as
    a. line organization b. functional organization
    c. line and staff organization d. none of these
12. The resources in a construction project are made up of
    a. plant equipment and machinery required for the project
    b. construction materials such as cement, bricks, steel etc.
    c. skilled and unskilled manpower
    d. all of the above
13. The process of calculating the resource requirement of a project is known as
    a. scheduling b. resource aggregation
    c. coordinating d. all of these
14. The pre-tender stage of construction requires
    a. selection of site b. acquisition of land
    c. finalization of design d. all of these
15. Bar chart is suitable for
    a. minor project b. major project c. large project d. all of these
16. Technical planning is carried out for the
    a. preparation of detailed drawing b. planning resources and initiating procurement action
    c. preparation of detailed estimate d. all of these
17. The post-tender stage of construction consists of
    a. assessment of work b. assessment of expenditure during execution
    c. finalizing of accounts d. all of these

Scanned with CamScanner

39. The area of field is 25,000m². Length and breadth of the field, on the map is 5cm and 5cm respectively. What is the Representative Fraction of the scale?
a. 1/1200 b. 1/3100 c. 1/3162 d. 1/3200

40. Initial work and construction lines are drawn using __ pencil.
a. 3H b. 4H c. H d. 2H

41. One furlong = _____ meters.
a. 180 b. 300 c. 100 d. 200

42. Which of the following is not a line segment?
a. Bamboo b. Ruler c. Laser beam d. Pencil

43. Length of scale (LOS) = _____ ×_____
a. Max. Length and R.F b. R.F and Min. length
c. R.I and Max. Length d. E.I and Max. Length

44. Which of the following is not present in a circle?
a. Angle b. Centre c. Sector d. Eccentricity

45. In which of the following projection depth is not shown?
a. Oblique projection b. Isometric projection
c. Perspective projection d. Orthographic projection

46. What is the scale ratio of full size scales?
a. 1:2 b. 1:3 c. 1:10 d. 1:1

47. For a plain scale, RF = 14 and M.L = 5decimeters, what is LOS?
a. 1.25 cm b. 12.5 cm c. 12.5 m d. 12.5dm

48. Parabolic curves is not used in _____
a. Arches b. Bridges c. Sound reflectors d. Boring

49. When the projectors are parallel to each other and also perpendicular to the plane, the projection is called _____ projection.
a. Oblique projection b. Orthographic projection
c. Isometric projection d. Perspective projection

50. By an equation how can you define a cycloid?
a. $y = a(1-\sin\alpha)$ b. $x = a(\alpha - \cos\alpha)$ c. $x = a(\alpha - \sin\alpha)$ d. $x = a(1 - \sin\alpha)$

51. Planes are formed when any three _____ points are joined.
a. non-collinear b. collinear c. concentric d. eccentric

52. When the plane surface is held with its surface parallel to one of the planes of projection, the view of the plane surface projected on it will be in _____
a. apparent shape b. point shape c. true shape d. line shape

53. Figure below represents a section (shaded) obtained due to intersection by a plane that is parallel to the axes of the cones, what it the section called?

a. Parabola b. Hyperbola c. Ellipse d. Cycloid

54. The three lines meeting at a point and making an angle of 1200 with each other is called_____
a. isometric axes b. axonometric c. orthographic axes d. oblique axes

55. _____ will be the edges of inclined or oblique planes of an object as represented in a multi-view drawing.
a. Inclined lines b. Non-isometric lines
c. Isometric lines d. Curved lines

Scanned with CamScanner

94. The financial analysis helps to judge:
   a. The operational efficiency of the firm
   b. The financial position of the firm.
   c. Both (a) and (b)
   d. Neither (a) nor (b)

95. Pick up the correct statement from the following:
   a. An annuity is a series of equal payments occurring at equal period of time.
   b. Annuity is called an equal payment or uniform payment series.
   c. An annuity may have periods of time of any length but should always be of equal length.
   d. All the above.

96. The construction estimate of a project is used by :
   a. the owner of the facility
   b. the consulting architect/engineer
   c. the contractor of the project
   d. All of these

97. If S is the future capital accumulated in n years at the rate of interest i per annum, then present worth is:
   a. $S/(1+i)^n$
   b. $S(1+i)n$
   c. $S(1+i)1/n$
   d. None of these

98. Pick up the correct statement from the following:
   a. $\text{Over head rate} = \frac{\text{total over head in rupees for period}}{\text{direct labour in rupees for period}}$
   b. Over head cost per unit = Overhead ratio x direct labour cost/unit
   c. both (a) and (b)
   d. neither (a) nor (6)

99. In a cash-flow diagram :
   a. Time 0 is considered to be the present
   b. Time 1 is considered to be the end of time period 1
   c. A vertical arrow pointing up indicates a positive cash flow
   d. An arrow pointing downward indicates a negative cash flow
   e. All of these

100. The annuity which refers to a debt payment for recovering the initial amount or capital in equal periodical payments, is known as;
   a. Present Worth Annuity
   b. Sinking fund annuity
   c. Compound annuity
   d. Capital recovery annuity

101. If a seller recovers his capital along with accumulated compensating interest not in one single lump sum payment but in periodical equal payments, over time :
   a. Capital Recovery Annuity fs availed
   b. Present work Annuity is availed
   c. Sinking Fund Annuity is availed
   d. Sinking Fund Annuity is availed

102. Which method is adopted to develop an approximate or conceptual estimate for perimeter works for buildings from the following:
   a. Base unit method
   b. Cost per function method
   c. Cost per square metre method
   d. Cost per cubic metre method
   e. Cost per linear metre method

103. The product of CAF (S P) and PWF (S P) is:
   a. 1/2
   b. 1
   c. 1/3
   d. 1/4

104. Annuities involve:
   a. a series of payments
   b. all payments of equal amount
   c. payment at equal time intervals
   d. payments at the end of periods.
   e. All of these

105. Pick up the correct statement from the following:
   a. A NPV profile graph shows the curvilinear relationship between the net present value of the project and discount rate employed.
   b. In a NPV profile, if discount rate is zero, then net present value is simply total cash inflows less the total cash outflows of the project.
   c. As the discount rate increases, the net present value profile slopes downward to the right.
   d. All of these

Scanned with CamScanner

responsibilities of Nepal Engineering Association (NEA)

ote development of the engineering science and technology in Nepal.

ote fellowship goodwill and cooperation assistance among the Nepalese engineers and d their rights and interests.

zing, to the highest extent possible, the participation of the national engineering manpower the country in the national development activities of Nepal, make effort towards ending foreign dependency in this regard.

To continuously enhance the highest professional ideals among the members and widen it.

To develop relations, fellowship and goodwill with international engineering associations and institutions.

.6 Engineering Regulatory Body

.6.1 Nepal Engineering Council (Acts and Regulations)

he Nepal Engineering Council Act, 2055 (1999)

1. **Definitions:** Some definitions related to engineer and engineering field are:
   a. "Council" means the Nepal Engineering Council established under Section 3.
   b. "Chairman" means the Chairman of the Council.
   c. "Member" means the Member of the council and this term also means and includes the chairman and Member-Secretary of the Council.
   d. "Engineer" means a person who holds at least a Bachelor's Degree in an engineering subject from an academic institution recognized by the council.
   e. "Engineering Profession" means the profession to be practiced by the engineers who have acquired the technical knowledge and skill in the subjects referred to in the Annex.
   f. "Registration Book" means the Registration Book prepared under section 15.
   g. "Registered Engineer" means the engineer whose name has been registered in the Registration Book.
   h. "Registrar" means the person appointed under Section 27.
   i. "Subject Committee" means the Subject Committee constituted under Section 32.
   j. "Prescribed" or "As Prescribed" means prescribed or as prescribed in the Rules made under this Act.
2. **Council to be an Autonomous Body:**
   i. The council shall be an autonomous and corporate body with perpetual succession.
   ii. The council shall have a separate seal of its own for all of its business and transactions.
   iii. The Council may, like an individual, acquire, use, own, sell or distribute movable and immovable properties or make provision of them by any other manner.
   iv. The council may sue or be sued in its name like an individual.
3. **Constitution of the Council:**
   i. The council established under Section 3 shall consist of the following Members:-
      a. An engineer nominated by His Majesty's Government from amongst the engineers who have at least fifteen years' experience in the engineering profession after having obtained a Bachelor's Degree in subject of engineering. – Chairman (Er. Dr. Padma Bahadur Shahi) – 1
      b. An engineer nominated by His Majesty's Government from amongst the engineers who have at least ten years' experience in the engineering profession after having obtained a Bachelor's Degree in a subject of engineering. – Vice- chairman (Er. Dr. Bikash Adhikari) – 1
      c. Seven engineers nominated by His Majesty's Government from amongst the engineers engaged in the engineering profession. – Member – 7
      d. President, Nepal Engineers Association – Member (Er. Dr. Hari Bahadur Darlami) – 1
      e. Five engineers elected by Nepal Engineers Associations –Member – 5

Scanned with CamScanner

The straight lines which are drawn from various points on the contour of an object to meet a plane are called:

a. Connecting lines b. Perpendicular lines c. Hidden lines d. Projectors

In oblique projection an object is represented by how many views?

a. Four views b. Three views c. Two views d. One view

The front view of an object is shown on which plane?

a. Profile plane b. Horizontal plane c. Parallel plane d. Vertical plane

What is additional third view on orthographic projection in general for simple objects?

a. Side view b. Front view

c. Top view d. View at 45^0 perpendicular to horizontal plane

In orthographic projection, each projection view represents how many dimensions of an object:

a. 2 b. 3 c. 1 d. 0

When drawings are smaller than the actual size of the objects the scale is said to be

a. Enlarging scale b. small scale c. reducing scale d. decreasing scale

Which of the following represents the reducing scale?

a. 1:1 b. 10:1 c. 1:10 d. None of the above

Which of the following represents the enlarging scale

a. 1:1 b. 1:10 c. 10:1 d. None of the above

Which of the following represents full scale

a. 1:10 b. 10:1 c. 1:1 d. None of the above

Isometric view of cube is drawn the angle between the edge of cube and horizontal will be..... degrees

a. 15 b. 45 c. 30 d. 60

When projectors are parallel to each other and also perpendicular to the plane, the projection is called:

a. Perspective projection b. Oblique projection

c. Orthographic projection d. Isometric projection

The object we see in our surrounding with our eyes are

a. Oblique projection b. Isometric projection

c. Perspective projection d. Orthographic projection

In orthographic projection an object is represented by two or three views on different planes which

a. Gives views from different angles from different direction

b. Are parallel along one direction but at different cross-section

c. Are obtained by taking prints from 2 or 3 sides of object

d. Are mutually perpendicular projection planes

Isometric view of cube is drawn and faces of cube are seen as

a. square b. rectangle c. rhombus d. parallelogram

The following line used for visible outlines

a. continuous thin b. chain thin line c. continuous thick d. short zigzag line

Dimension line is drawn by:

a. chain thin line b. short zigzag line c. continuous thick d. continuous thin

Isometric view of equilateral triangle will be

a. equilateral triangle b. isosceles triangle c. scalene triangle d. right angled triangle

The value of the ratio of isometric length to true length is

a. 0.815 b. 0.141 c. 0.372 d. 0.505

The length of isometric drawing of a line is 10cm. What is the true length of the line?

a. 8.150cm b. 13.412cm c. 12.270cm d. 14.141cm

Lines of sights (projectors) for oblique projection will be:

a. parallel to each other and inclined to projection plane

b. parallel to each other and perpendicular to projection plane

c. not parallel to each other and perpendicular to projection plane

d. not parallel to each other and inclined to projection plane

$\frac{10}{0.815}$

Lines of sight (projectors) for orthographic projection will be

a. not parallel to each other and perpendicular to projection plane

b. parallel to each other and perpendicular to projection plane

c. parallel to each other and inclined to projection plane

d. not parallel to each other and inclined to projection plane

Scanned with CamScanner

- **Half section:** If the cutting plane is passed halfway through an object, and one-quarter of the ol is removed, the resulting section is a half section. A half section has the advantage of showing inside and outside configurations.

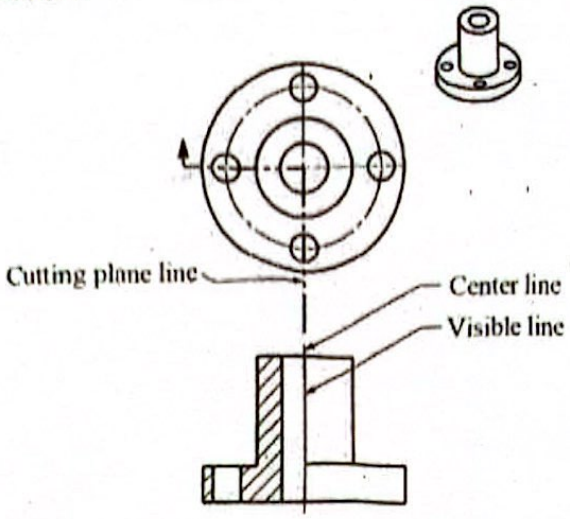

Fig: half section

Multiple Choice Questions

1. What information is not included in title block of sheet
   a. size of sheet b. scale c. method of projection d. sheet number
2. Two arms of drafter remains at ..... degrees during operation
   a. 45 b. 60 c. 180 d. 90
3. Which type of line is part of dimension line?
   a. Extension line b. Break lines c. Phantom lines d. cutting plane line
4. Drawing helps in
   a. Idea communication b. cost estimation
   c. preparing bill of quantities d. all of the above
5. The mini drafter serves the purpose everything except
   a. scales b. compass c. set square d. protector
6. Which type of line is particular to section drawing?
   a. Break lines b. Phantom lines c. Extension lines d. Cutting plane line
7. Which line type is thin and light?
   a. visible lines b. Construction line c. center lines d. all of the above
8. Which of the line is thick and black?
   a. center line b. construction line c. visible line d. all of the above
9. Set square cannot draw the angle of
   a. 15° b. 45° c. 25° d. 105°
10. Which of the following is not used to fix drawing sheet on the board?
    a. Drawing pins b. Adhesive tapes c. clips d. Thread
11. Ingredients of pencil lead are:
    a. Lead and Graphite b. Graphite and Clay
    c. Clay and lead d. None of these
12. What information should be available in engineering drawing?
    a. shape of object b. exact sizes and tolerances of various parts of obj
    c. name of company d. All of the above
13. The dimension of sheet 841 × 1189 is
    a. A1 b. A0 c. A2 d. A3
14. Which of the pencil is lightest?
    a. 2B b. 1B c. HB d. H
15. Which of the pencil is softest pencil?
    a. 2B b. 1B c. HB d. H

Scanned with CamScanner

82. In the cash-flow diagram shown in the given figure

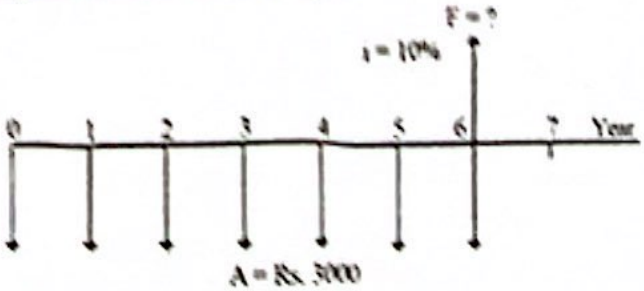

a. Equal deposits of Rs 3000 per year (a) are made, starting now.
b. The rate of interest is 10% per yearaccount
c. The amount accumulated after the seventh deposit is to be computed
d. All of these

83. Pick up the correct statement from the following:
a. The change in the amount of money over a given time period is called 'time value' of money, a most important concept in engineering economy.
b. The manifestation of the time value of money is termed as interest.
c. Interest on borrowing = present amount owed - original loan
d. The original investment (or loan) is referred to as principal.
e. All of these.

84. The ratio of current assests to current liabilities is known as
a. Liquidity ratio
b. Current ratio
c. Acid-Test (or Quick) ratio
d. Debts ratio

85. Both architect and engineer make use of the cost estimate of the project:
a. for site selection
b. for designing of the project
c. for choosing alternatives
d. All of these

86. A construction estimate is used
a. to judge tentatively or approximate value of the project
b. to produce a statement of the approximate cost
c. to decide an approximation of the value of the project and not the exact cost.
d. None of these

87. Present worth Annuity (PWA) is generally known as
a. Premium annuities b. Income annuities c. Future annuities d. All of these

88. If P is principal amount, i is the rate of interest and n is the number of periods in years, then the interest factor is :
a. $(1 + n_i)$ b. $(n_i - 1)$ c. n_i d. None of these

89. The interest calculated on the basis of 365 days a year, is known as :
a. interest
b. ordinary simple interest
c. exact simple interest
d. None of these

90. If a is the base amount expenditure, b is the increase in the operation cost each year over a period of n years, the total cost of maintenance is :
a. $a + (n + 1) b$ b. $a + (n - 1) b$ c. $a \times (n - 1) b$ d. $a - (n - 1) b$

91. Probabilistic estimating of a construction project includes:
a. Labour b. Productivity c. wage scale d. All of these

92. Pick up the ratio which gives us sufficient information by which to judge the financial condition and performance of the firm, from the following:
a. Liquidity ratio
b. Financial leverage ratio
c. Activity ratio
d. Portability
e. None of these

93. Ratio analysis of a construction firm is used for analysis by :
a. share holders b. firm's management c. Banks of the firm d. financial analysts
e. All of these.

Scanned with CamScanner

9. ..... refers to the change in net capital assets.
   a. Operating cash flow
   b. Net working capital
   b. Cash flow from investing
   d. Cash flow from assets
10. Liquidity is
   a. a measure of the use of debt in a firm's capital structure
   b. valuable to firm even though liquid assets tend to be less profitable to own
   c. equal to the market value of a firm's total assets minus its current liabilities
   d. generally associated with intangible assets
11. Statement of cash flows includes
   a. Financing Activities
   b. Operating Activities
   c. Investing Activities
   d. All of the Above
12. In cash flows, when a company invests in fixed assets and short-term financial investments results in
   a. Increased Equity
   b. Increased Liabilities
   c. Decreased Cash
   d. Increased Cash
13. The purchase value of assets over its serviceable life is categorized as
   a. Appreciated Liabilities
   b. Appreciated Assets
   c. Depreciation
   d. Appreciation
14. The statement of cash flow clarifies cash flows according to
   a. Operating and Non-operating Flows
   b. Inflow and Outflow
   c. Investing and Non-operating Flows
   d. Operating, Investing, and Financing Activities
15. Interest collected by an automobile company selling a car on an instalment basis will be classified as..... in the cash flow statement.
   a. Investing activity
   b. Operating activity
   c. Financing activity
   d. Cash and cash equivalents
16. The method that ignores cash generation beyond period when cash inflow exceeds investment
   a. payback method
   b. ARR
   c. NPV
   d. IRR

   Note: Accounting Rate of Return (ARR), also known as the average rate of return, or ARR is a financial ratio used in capital budgeting. The ratio does not take into account the concept of the time value of money. ARR calculates the return, generated from the net income of the proposed capital investment. The ARR is a % return.
17. The ratio obtained by dividing 'quick assets' by current liabilities is called
   a. Turnover ratio
   b. Acid test ratio
   c. Solvency ratio
   d. None
18. Pick up the element of the cost from the following:
   a. direct material
   b. direct labor
   c. Overhead
   d. All of these
19. Current assets less inventories divided by current liabilities is known as
   a. liquidity ratio
   b. current ratio
   c. Quick ratio
   d. Debts ratio
20. The alternatives which are standalone solutions for given situations in engineering involve:
   a. a purchase cost (first cost)
   b. the yearly costs of maintaining the assets (annual maintenance and operating cost)
   c. the anticipated salvage value and the interest return (rate of return)
   d. All of these
21. The ratio of current assets to current liabilities is known as
   a. liquidity ratio
   b. current ratio
   c. Quick ratio
   d. Debts ratio
22. The more critical (or severe) test of the firm's liquidity can be judged by:
   a. liquidity ratio
   b. current ratio
   c. Quick ratio
   d. Debts ratio
23. In a cash flow series:
   a. uniform gradient signifies that an income or disbursement changes by the same amount in each interest period.
   b. Either an increase or a decrease in the amount of a cash flow is called the gradient.
   c. The gradient in the cash flow may be positive or negative.
   d. All of these

Scanned with CamScanner

14. Arrange the statements. Given statements refers to free-hand sketching of straight lines.

i. Then begin to draw the line with short and light strokes.
ii. Hold the pencil at about 30 mm distance from the lead point.
iii. Finish finally with a dark and firm line.
iv. Swing it from left to right and backward, between the two points.

a. (i), (ii), (iii) and (iv)
b. (ii), (iii), (iv) and (i)
c. (iv), (iii), (i) and (ii)
d. (ii), (iv), (i) and (iii)

15. Which type of dimensioning is shown below?

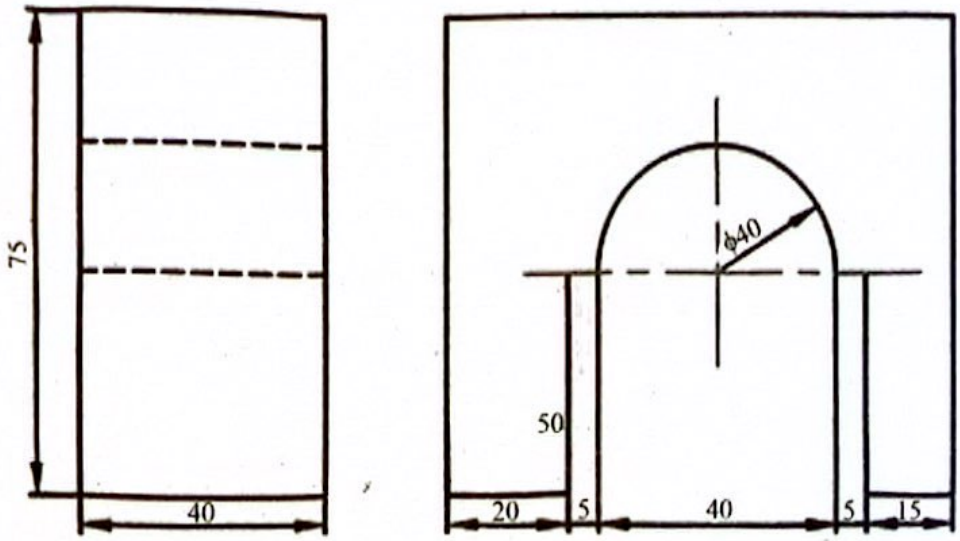

a. Chain dimension
b. Parallel dimension
c. Unidirectional dimension
d. Combined dimension

16. Which type of dimensioning is done below?

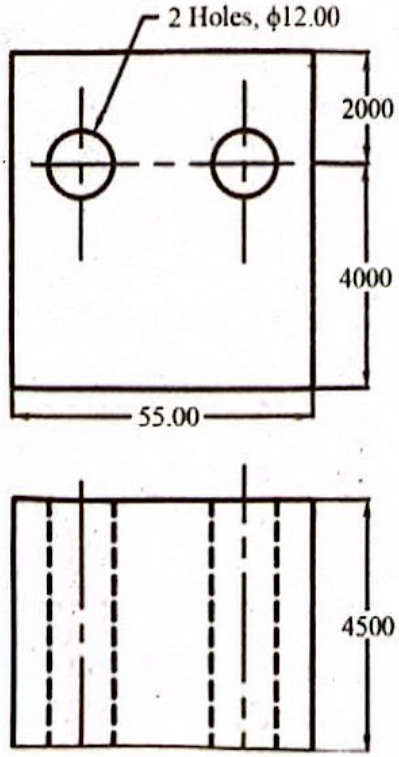

a. Unidirectional and chain dimension
b. Aligned and parallel dimension
c. Aligned and chain dimension
d. Unidirectional and parallel dimension

Scanned with CamScanner

23. For large objects such as buildings, the station point is usually taken at the eye level of a person of normal height that is about _____ meters.
a. 2 b. 1 c. 1.5 d. 1.8

24. Which of the following scales is used when there are three units that need to be measured?
a. Plain scale b. Comparative scale c. Diagonal scale d. Vernier scale

25. The perspective view of a circle in any type of typical position be_____
a. circle b. ellipse c. oval d. lemniscate

26. What does the "Single-Stroke" lettering mean?
a. Cursive writing
b. Uniformity in letters as obtained in one stroke of the pencil
c. Writing in one stroke without lifting the pencil
d. Writing only with hard, small diameter lead-pencil

27. If there is a need for the center line, then it can be used as a _____
a. Dimension line b. Leader line c. Extension line d. Section line

28. To draw the perspective view of a circle the circle should be enclosed in _____ and then pointing points and next steps goes on.
a. square b. rectangle c. rhombus d. parallelogram

29. Which type is the line A in the following figure?

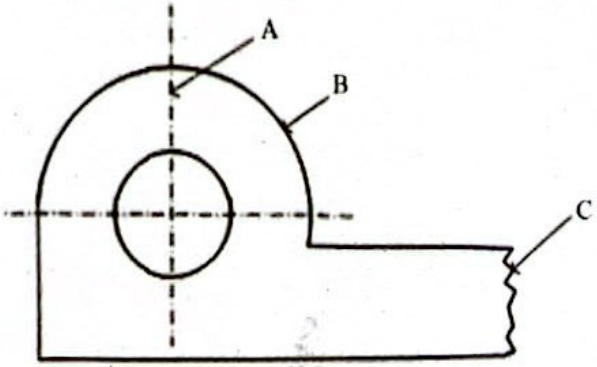

a. Dimension line b. Extension line c. Centre line d. Short-break line

30. When drawings are drawn smaller than the actual size of the objects the scale used is said to be ____
a. Enlarging scale b. Reducing scale c. Small scale d. Decreasing scale

31. The ratio of the length of the drawing of the object to the actual length of the object is called ___
a. Resulting fraction b. Representative figure
c. Representative fraction d. Representative index

32. The scale of chords is used to measure _____
a. Chords b. Lines c. Angles d. Diameter

33. Hatching lines are done at _____ degrees
a. 90 b. 25 c. 30 d. 45

34. What is the use of circular vernier as a measuring instrument?
a. Measuring small angle b. Measuring large angle
c. Measuring required accurate angle d. Normal angle

35. If the measurement required is in three units, which scale would you prefer?
a. Plain b. Comparative c. Diagonal d. Vernier

36. Vernier scale consists of two important parts, vernier scale and _____
a. Secondary scale b. Initial scale c. Main scale d. Large scale

37. A room of 1728 m3 volume is shown as 216 cm3 volume on a drawing sheet. What is the R.F?
a. 1/20 b. 1/200 c. 1/250 d. 1/186

38. Centre lines, section lines are drawn using __ pencil.
a. H b. 2H c. 3H or 4H d. HB

Scanned with CamScanner

24. The cash flow generated by a company from its normal business operations after subtracting any money spent on capital expenditures is
   a. Free cash flow
   b. Cash flow from operations
   c. Cash flow from investing
   d. Cash flow from financing
25. Positive cash flow indicates that a company's liquid assets are
   a. increasing
   b. decreasing
   c. may be both
   d. neither increasing nor decreasing
26. If the series of cash flow changes (increases or decreases) not by a fixed amount but by some fixed rate (g) expressed as percentage, then series is called
   a. Uniform payment series
   b. linear-gradient series
   c. geometric-gradient series
   d. mixed series
27. Capital Recovery Factor (CRF) =
   a. $\frac{i(1+i)^n}{(1+i)^n - 1}$ b. $\frac{(1+i)^n}{(1+i)^n - 1}$ c. $\frac{i(1+i)^n}{(1+i)^n + 1}$ d. $\frac{(1+i)^n}{(1+i)^n + 1}$
28. Sinking Fund Factor (SFF)
   a. $\frac{i}{(1+i)^n - 1}$ b. $\frac{1}{(1+i)^n - 1}$ c. $\frac{i}{(1+i)^n + 1}$ d. $\frac{1}{(1+i)^n + 1}$
29. If interest is paid more than once in a year, i is the rate of interest per year, n is the number of compounding periods per year and t is a number of years, then Future Value Factor (FVF) is
   a. $\left(1+\frac{i}{n}\right)^{n \times t}$ b. $\left(1+\frac{i}{t}\right)^{n \times t}$ c. $\left(1+\frac{i}{n}\right)^{n/t}$ d. $\left(1+\frac{i}{t}\right)^{n/t}$
30. Future Value of an Annuity Due (FVAD) =
   a. $A \times \frac{(1+i)^n - 1}{i} \times (1+i)$ b. $A \times \frac{(1+i)^n - 1}{i}$ c. $A \times \frac{(1+i)^n - 1}{i} \times (1-i)$ d. $A \times \frac{(1+i)^n + 1}{i} \times (1+i)$
31. Future Value of an Ordinary Annuity (FVOA) =
   a. $A \times \frac{(1+i)^n - 1}{i} \times (1+i)$ b. $A \times \frac{(1+i)^n - 1}{i}$ c. $A \times \frac{(1+i)^n - 1}{i} \times (1-i)$ d. $A \times \frac{(1+i)^n + 1}{i} \times (1+i)$
32. Present Value of an Annuity Due (PVAD) =
   a. $A \times \frac{(1+i)^n - 1}{i(1+i)^n} \times (1+i)$ b. $A \times \frac{(1+i)^n - 1}{i(1+i)^n}$ c. $A \times \frac{(1+i)^n - 1}{i(1+i)^n} \times (1+i)$ d. $A \times \frac{(1+i)^n - 1}{i} \times (1+i)$
33. Present Value of an Ordinary Annuity (PVOA) =
   a. $A \times \frac{(1+i)^n - 1}{i(1+i)^n} \times (1+i)$ b. $A \times \frac{(1+i)^n - 1}{i(1+i)^n}$ c. $A \times \frac{(1+i)^n - 1}{i(1+i)^n} \times (1+i)$ d. $A \times \frac{(1+i)^n - 1}{i} \times (1+i)$
34. The interest calculated on the basis of 365 days a year, is known as
   a. Interest
   b. Ordinary simple interest
   c. exact simple interest
   d. none
35. In a cash-flow diagram
   a. Time 0 is considered to be the present
   b. A vertical arrow pointing up indicates a positive cash flow
   c. An arrow pointing downward indicates a negative cash flow
   d. All of these
36. The annuity which refers to a debt payment for recovering the initial amount or capital in equal periodical payments, is known as
   a. Present Worth Annuity
   b. Sinking fund annuity
   c. Compound annuity
   d. Capital recovery annuity
37. Pick up the method used for project evaluation and selection in capital budgeting from the following
   a. Pay back method
   b. Internal ratio of return
   c. Net present worth
   d. All of the above

Scanned with CamScanner

Annuity: An annuity is a series of equal payments in equal time periods. Usually, the time period is 1 year, that's why it is called an annuity, but the time period can be shorter, or even longer. An **annuity due** is an annuity where the payments are made at the beginning of each time period, for an **ordinary annuity**, payments are made at the end of the time period. Most annuities are ordinary annuities.

Economic Equivalence: A combination of time value of money and interest rate that makes different sums of money at different times have equal economic value.

Direct/Indirect Cost: Direct costs are primarily human labor, machines, and materials associated with a product, process, system, or service. Indirect costs, which include support functions, utilities, management, legal, taxes, and the like, are more difficult to associate with a specific product or process.

Cost of capital: Cost of capital is a company's calculation of the minimum return that would be necessary in order to justify undertaking a capital budgeting project. It is usually a weighted average that involves the cost of debt capital (loans, bonds, and mortgages) and equity capital (stocks and retained earnings).

Operating costs are incurred through the operation of physical plant or equipment needed to provide service; examples include items such as labor and raw materials.

Opportunity cost: A forgone opportunity caused by the inability to pursue a project. Numerically, it is the largest rate of return of all the projects not funded due to the lack of capital funds. It can be said as the value that is lost when a business is choosing between two or more alternatives.

Minimum Acceptable Rate of Return (MARR): A reasonable rate of return established for the evaluation of an economic alternative. Also called the hurdle rate, cutoff rate, benchmark rate, and minimum acceptable rate of return. MARR is based on cost of capital, market trend, risk, etc. It is the interest rate that must be earned for any project to be accepted.

Nominal or Effective Interest Rate (r or i): A nominal interest rate does not include any compounding; for example, 1% per month is the same as nominal 12% per year. Effective interest rate is the actual rate over a period of time because compounding is imputed; for example, 1% per month, compounded monthly, is an effective 12.683% per year. Inflation or deflation is not considered.

Rate of return: An interest rate that equates a PW or AW relation to zero. Also defined as the rate on the unpaid balance of borrowed money, or rate earned on the unrecovered balance of an investment such that the last cash flow brings the balance exactly to zero.

Inflation: It is the rate at which the general level of price for goods and services is rising and, consequently, the purchasing power of currency is falling.

Deflation: It is the contraction in the supply of circulated money within an economy, and therefore the opposite of inflation.

Depreciation: A reduction in the value of an asset over time, due in particular to wear and tear.

Assets: An asset is something owned, such as property and equipment, that brings value to a business. It is the economic value of an item which is possessed by the enterprise. Assets are those items that can be transformed into cash or that generates income for the enterprise shortly. Assets can be either tangible (can be seen in physical form), such as equipment, supplies, and inventory, or intangible (not a physical property), such as intellectual property.

Current assets are those that will be cashed in within the current fiscal period, which is usually one year. Noncurrent assets are long-term assets that can't be liquidated within the current fiscal period.

Liability: A liability is what the business owes and must be paid out. It is the economic value of an obligation or debt that is payable by the enterprise to other establishment or individual. Liabilities are the obligations that are rising out of previous transactions, which is payable by the enterprise, through the assets possessed by the enterprise.

Scanned with CamScanner

...portionally among the creditors for having failed to ...ulitor.(If he becomes bankrupt),

c. If a motion submitted to a meeting of the Council to remove his name from the Registration Book on the charge of violating the professional code of conduct as prescribed is passed by a two-thirds majority,

d. If he is convicted by a court in a criminal charge involving moral turpitude,

e. If the name of a person who does not possess the required qualifications has happened to be registered by fraud or error.

2. Prior to the submission of the motion to remove the name of any registered engineer from the Registration Book on a charge as referred to in clauses (c) and (e) of sub-section (1) to a meeting of the Council, the Council shall constitute an inquiry committee requiring to submit a report after having conducted an inquiry in regard to the charge imposed on such a person.

3. The procedures to be followed by the Inquiry Committee constitute under sub-section (2) while conducting the inquiry shall be as prescribed.

...mary

...C Act 2055

Number of chapter: 7

Number of clauses: 38

Amendment on (लागु भएको): 2079/05/05

Current Registrar: Er. Shiw Mangal Giri

First President: Er. Ram Babu Sharma

First Registrar: Er. Bindeshwor Yadav

Multiple Choice Questions

What is the provision in NEC Act and Regulation in Nepal for the punishment if a person practices Engineering work without registering into the NEC

a. Rs 1000 fine or imprisonment of 1 month or both
b. Rs 5000 fine
c. RS 10000 fine
d. Rs 3000 fine or imprisonment of 3 month or both

Professional code of conduct issued by Nepal Engineering Council has

a. 5 articles b. 6 articles c. 7 articles d. 8 articles

The general experience required for the nominations of chairperson of Nepal Engineeering Council after receiving Master's degree is

a. 10 years b. 15 years c. 20 years d. None of the above

In general, Nepal Engineering council meeting per year should be held

a. one times b. two times c. three times d. four times

Any non-Nepali Engineer desiring to work in Nepal may apply for registration under

a. Category A b. Category B c. Category C d. Category D

Scanned with CamScanner

Ziegler-Nichols Rule Table

$G_{PID} = K_p\left(1 + \frac{1}{T_I S} + T_D S\right)$. P_u ultimate period, K_u ultimate ga

	K_p	T_I	T_D
P	$0.5\,K_u$	-	-
PI	$0.45\,K_u$	$0.85\,P_u$	-
PID	$0.60\,K_u$	$0.5\,P_u$	$0.125\,P_u$

Scanned with CamScanner

17. Identify the type of dimensioning used in the figure below.

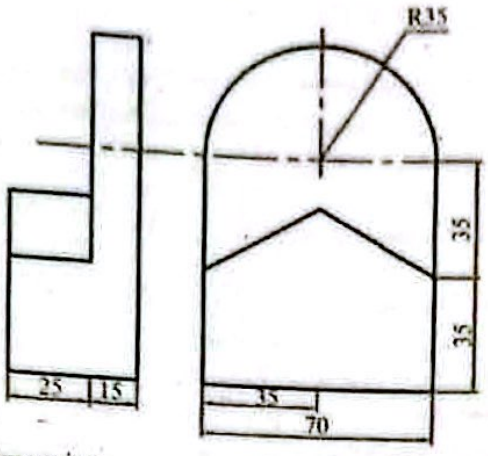

a. Parallel and aligned dimension
b. Parallel and unidirectional dimension
c. Chain and aligned dimension
d. Chain and unidirectional dimension

18. Which type of dimensioning is done in the example below?

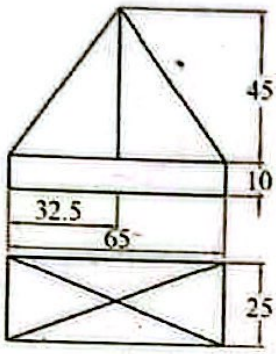

a. Parallel dimension
b. Chain dimension
c. Combined dimension
d. Aligned dimension

19. The perspective will show the object _____ in size when it is placed behind the picture plane. If the object is moved nearer the picture plane the size of the perspective will _____

a. reduced, decrease b. reduced, increase c. increased, reduce d. increased, increase

20. Which of the following is softest pencil?

a. 2B b. 2H c. HB d. H

21. The advised position of placement of the dimensions should be _____

a. Inside the view
b. Outside the view
c. On the boundaries of the view
d. Cutting the view

22. Which of the following dimension is incorrect?

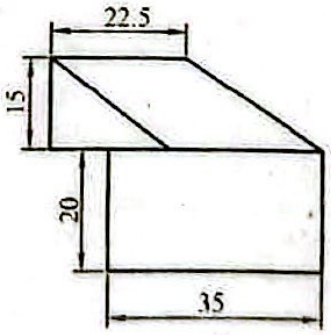

a. 22.5 b. 15 c. 20 d. 35

Scanned with CamScanner

38. What refers to the cost of borrowing money or the amount earned by a unit principal per unit time?
a. Yield rate b. Rate of return c. Rate of interest d. Economic return

39. What is the term for an annuity with a fixed time span?
a. Ordinary annuity b. Perpetuity c. Annuity certain d. Annuity due

40. What refers to the cumulative effect of elapsed time on the money value of an event, based on the earning power of equivalent invested funds capital should or will earn?
a. Present worth factor b. Interest rate c. Time value of money d. Yield

41. The difference between the present and future worth of money at some time in the future is called
a. Discount b. Deduction c. Inflation d. Depletion

42. What refers to the present worth of the probable future net earnings?
a. Total fair value b. Total market value
b. Going concern value d. Earning value

43. What refers to the amount of money paid for the use of borrowed capital?
a. Interest b. rate of interest c. simple interest d. principal

44. What is defined as the investment of loan or principal which is based not only on the original amount of the loan or principal but the amount of loaned or principal plus the previous accumulated interest?
a. Effective rate of interest b. Nominal rate of interest
c. Compound interest d. Simple interest

45. What is the type of annuity that does not have a fixed time span but continues indefinitely or forever?
a. Ordinary annuity b. Perpetuity c. Annuity due d. Deferred annuity

46. What is the type of annuity where the first payment does not begin until some later date in the cash flow?
a. Ordinary annuity b. Perpetuity c. Annuity due d. Deferred annuity

47. Which is not an essential element of an ordinary annuity?
a. The amounts of all payments are equal
b. The payments are made at equal interval of time
c. The first payment is made at the beginning of the first period
d. Compound interest is paid on all amounts in the annuity

What is defined as the reduction or fall of the value of an asset due to constant use and passage of time?
a. Depletion b. Inflation c. Depreciation d. Deflation

49. What is the total amount accumulated after three years if someone invests Rs. 1,000 today with asimple annual interest rate of 5 percent? With a compound annual interest rate of 5 percent?
a. Rs. 1,150, Rs. 1,103 b. Rs. 1,110, Rs. 1,158
c. Rs. 1,150, Rs. 1,158 d. Rs. 1,110, Rs 1,103

Hints: Simple interest rate: Rs. 1,000 + (Rs. 1,000) (5%)(3) = Rs. 1,150
Compound interest rate: Rs. $1,000(1.05)^3$ = Rs. 1,158

Which of the following has the largest future value if Rs.1,000 is invested today?
a. Five years with a simple annual interest rate of 10 percent
b. 10 years with a simple annual interest rate of 8 percent
c. Eight years with a compound annual interest rate of 8 percent
d. Eight years with a compound annual interest rate of 7 percent

Hints:
a. 1,000 + (1,000)(10%)(5) = 1,500
b. 1,000 + (1,000)(8%)(10) = 1,800
c. $1,000(1.08)^8$ = 1,851 (largest)
d. $1,000\ (1.07)^8$ = 1,718

Answers Key

1.b	2.a	3.c	4.c	5.c	6.a	7.b	8.d	9.b	10.b	11.d	12.c	13.c	14.d	15.b
16.a	17.b	18.d	19.c	20.d	21.b	22.c	23.d	24.a	25.a	26.c	27.a	28.a	29.a	30.a
31.b	32.a	33.b	34.c	35.d	36.d	37.d	38.c	39.c	40.c	41.a	42.d	43.a	44.c	45.b
46.d	47.c	48.c	49.c	50.c										

Scanned with CamScanner

The size of the title block is _____ mm x _____ mm.
a. 25 × 10 b. 100 × 25 c. 65 × 185 d. 185 × 65

Which of the following is reducing scale?
a. 5:1 b. 5:2 c. 0.1:1 d. 3:1

The angle which we can't make using both the Set-squares is _____
a. 15° b. 105° c. 165° d. 40°

How many battens will be there for a Drawing board?
a. 4 b. 2 c. 3 d. 1

The angle between isometric axis is _____ degrees
a. 120 b. 90 c. 35 d. 45

SP: 46 (2003) recommends the borders of____ mm width for the sheet sizes A0 and A1, and____ mm for the sizes A2, A3, A4 and A5.
a. 10, 20 b. 15, 20 c. 20, 10 d. 15, 10

The false statement regarding orientation mark.
a. The orientation mark coincides with one of the centering marks
b. Represents the direction to which sheet is placed
c. Orientation mark can be used for the orientation of drawing sheet on the drawing board
d. Facilitate positioning of the drawing for reproduction purpose

As built drawing are normally constructed
a. before construction b. after construction
c. during construction d. none

Dimension of A3 sheet in mm is
a. 240 x 330 b. 420 x 594 c. 594 x 841 d. 297 x 420

The angle which we can't make using a single Set-square is _____
a. 45° b. 60° c. 30° d. 75°

The untrimmed size for _____ sheet is 240 mm x 330 mm.
a. A1 b. A3 c. A4 d. A5

Which statement is false?
a. Drawing for instruction manual: This is assembly drawing without dimensions. This is also used for explaining the working principle of each part
b. Exploded assembly drawing: This type of assembly drawing is used for explaining the working principle of any machine
c. Drawing for catalogue: Special assembly drawings are prepared for catalogues, with overall and principal dimensions
d. Patent drawing: It is generally assembly drawing either in pictorial form or principal view of orthographic projection of a machine

Which type of dimensioning is shown in the figure?

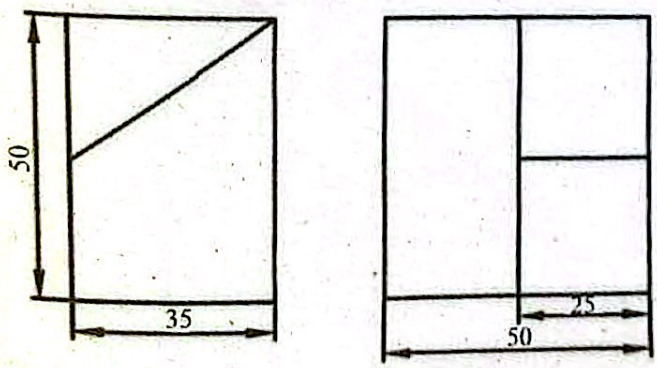

a. Parallel dimension b. Unidirectional dimension
c. Combined dimension d. Chain Dimension

Scanned with CamScanner

37. Hatching lines are done at ..... degree to reference lines
a. 30 b. 60 c. 45 d. 90

38. Dotted lines represents
a. Center b. Hatching c. Projection d. Hidden

39. Which are usually not used angle between the projection plane and receding lines for oblique projection?
a. 50 degrees b. 30 degrees c. 45 degrees d. 60 degrees

40. When the receding lines are drawn to full size scale then the oblique projection is .....
a. Cabinet projection b. cavalier projection
c. isometric projection d. orthographic projection

41. The oblique projection, the object is assumed to be placed with one face
a. perpendicular to plane of projection b. perpendicular to adjacent edge
c. parallel to plane of projection d. parallel to adjacent edge

42. If an isometric drawings is made with use of isometric scale then the drawings are called
a. Isometric view b. Isometric perception
c. Orthographic view d. Isometric projection

43. The angle between isometric axis is ..... degrees
a. 120 b. 90 c. 60 d. 45

44. If an isometric projection is drawn with true measurement but not with isometric scale then the drawings are called
a. Isometric projection b. Isometric view
c. Isometric perception d. Orthographic view

45. When the receding lines are drawn to half sixe scale then the oblique projection is .....
a. isometric projection b. orthographic projection
c. Cabinet projection d. cavalier projection

46. If isometric projection of an object is drawn with true lengths the shape would be same and the size is how much larger than the actual isometric projection?
a. 30% b. 27% c. 25% d. 22.5%

47. The faces parallel to projection plane are having..... size and shape in oblique in oblique projection
a. Actual b. Double c. Half d. Increased

48. Working drawings
a. need not provide complete information b. should provide complete information
c. should be supplemented by additional details d. none of the above

49. Site plan is a
a. structural plan b. section plan c. architectural plan d. none of the above

50. Free hand sketch is normally used for
a. final b. discussion c. revision d. concept

51. As built drawing is normally constructed
a. after construction b. before construction
c. during construction d. none of the above

52. Axonometric projection is a special type of
a. perspective projection b. orthographic projection
c. isometric projection d. multi-view projection

53. In orthographic projection of third angle type, picture plane is
a. oblique b. semi-transparent c. transparent d. all of the above

54. In general structural drawings would typically include
a. north point b. plan, section and elevation
c. notes and specification d. all the above

Answers

1.a	2.d	3.a	4.d	5.b	6.d	7.b	8.c	9.c	10.d	11.b	12.d	13.b	14.d	15.a
16.d	17.d	18.d	19.a	20.a	21.c	22.c	23.c	24.c	25.c	26.c	27.c	28.d	29.c	30.c
31.d	32.c	33.a	34.c	35.a	36.b	37.c	38.d	39.a	40.b	41.c	42.d	43.a	44.b	45.c
46.d	47.a	48.b	49.c	50.d	51.a	52. b	53. c	54.d						

Scanned with CamScanner