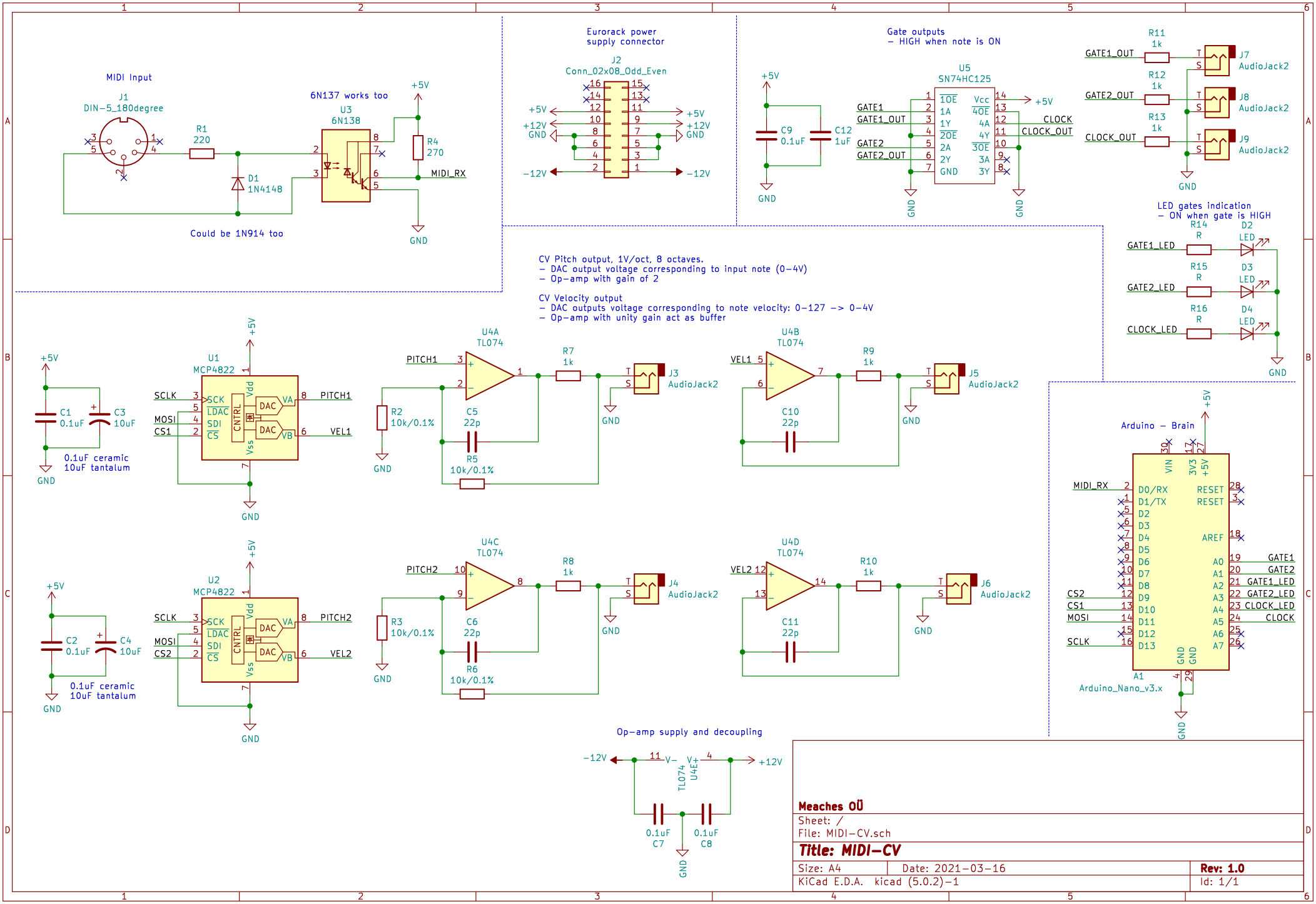
MIDI Input
J1
DIN-5_180degree
R1
220
D1
1N4148
6N137 works too
U3
6N138
+5V
R4
270
MIDI_RX
GND
Could be 1N914 too
Eurorack power
supply connector
J2
Conn_02x08_Odd_Even
+5V
+12V
GND
-12V
Gate outputs
- HIGH when note is ON
U5
SN74HC125
C9
0.1uF
C12
1uF
GATE1
GATE1_OUT
GATE2
GATE2_OUT
CLOCK
CLOCK_OUT
R11
1k
R12
1k
R13
1k
J7
AudioJack2
J8
AudioJack2
J9
AudioJack2
LED gates indication
- ON when gate is HIGH
R14
R
D2
LED
R15
R
D3
LED
R16
R
D4
LED
GATE1_LED
GATE2_LED
CLOCK_LED
CV Pitch output, 1V/oct, 8 octaves.
- DAC output voltage corresponding to input note (0-4V)
- Op-amp with gain of 2
CV Velocity output
- DAC outputs voltage corresponding to note velocity: 0-127 -> 0-4V
- Op-amp with unity gain act as buffer
C1
0.1uF
C3
10uF
0.1uF ceramic
10uF tantalum
U1
MCP4822
SCLK
MOSI
CS1
PITCH1
VEL1
U4A
TL074
PITCH1
R7
1k
R2
10k/0.1%
C5
22p
R5
10k/0.1%
J3
AudioJack2
U4B
TL074
VEL1
R9
1k
C10
22p
J5
AudioJack2
C2
0.1uF
C4
10uF
0.1uF ceramic
10uF tantalum
U2
MCP4822
SCLK
MOSI
CS2
PITCH2
VEL2
U4C
TL074
PITCH2
R8
1k
R3
10k/0.1%
C6
22p
R6
10k/0.1%
J4
AudioJack2
U4D
TL074
VEL2
R10
1k
C11
22p
J6
AudioJack2
Arduino - Brain
MIDI_RX
CS2
CS1
MOSI
SCLK
GATE1
GATE2
GATE1_LED
GATE2_LED
CLOCK_LED
CLOCK
A1
Arduino_Nano_v3.x
Op-amp supply and decoupling
-12V
+12V
TL074
U4E
C7
0.1uF
C8
0.1uF
Meaches OÜ
Sheet: /
File: MIDI-CV.sch
Title: MIDI-CV
Size: A4
Date: 2021-03-16
Rev: 1.0
KiCad E.D.A. kicad (5.0.2)-1
Id: 1/1