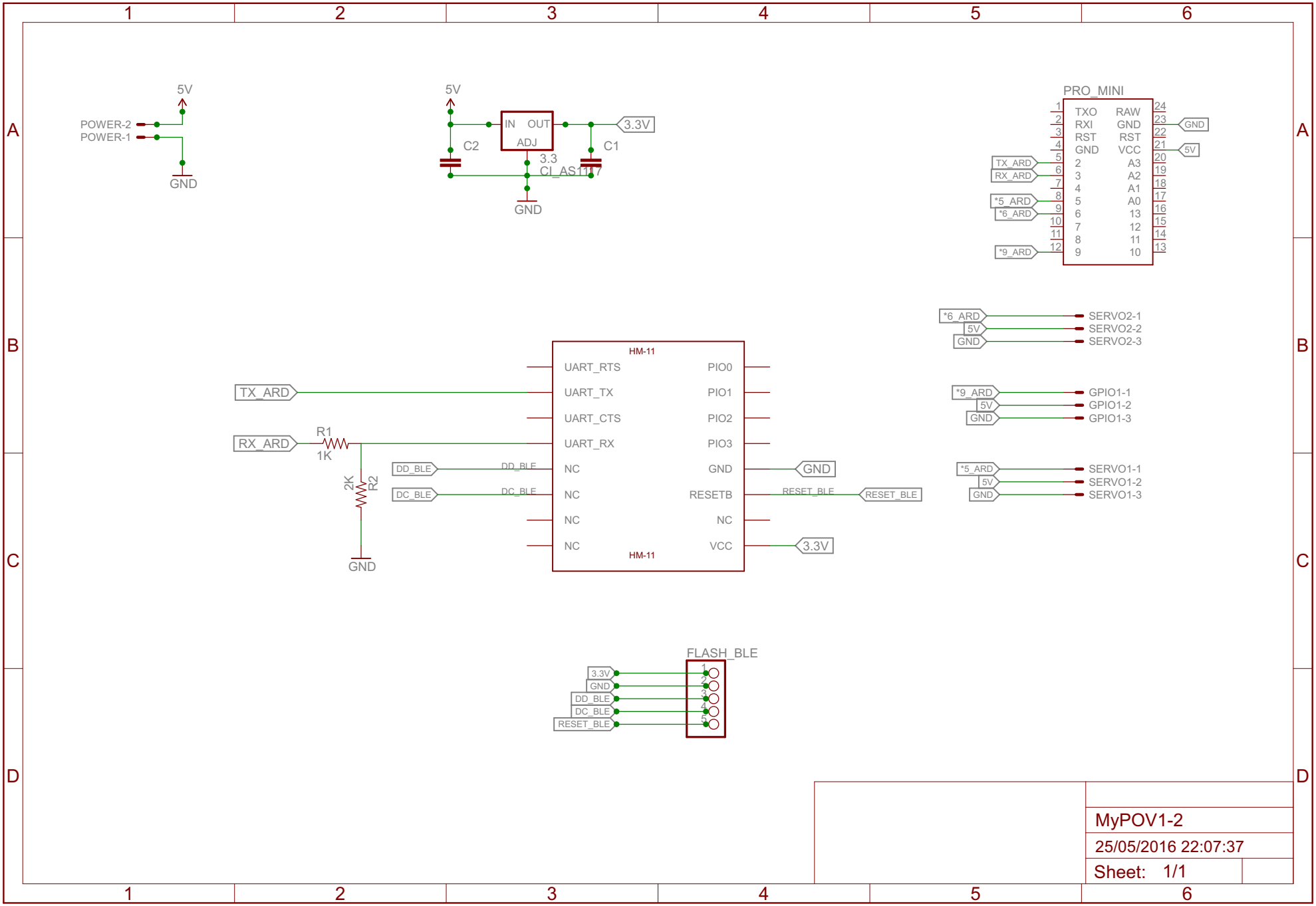
5V
POWER-2
POWER-1
GND
5V
IN
OUT
ADJ
3.3
CI_AS1117
C2
C1
3.3V
GND
PRO_MINI
TXO
RXI
RST
GND
2
3
4
5
6
7
8
9
RAW
GND
RST
VCC
A3
A2
A1
A0
13
12
11
10
TX_ARD
RX_ARD
*5_ARD
*6_ARD
*9_ARD
GND
5V
*6_ARD
5V
GND
SERVO2-1
SERVO2-2
SERVO2-3
*9_ARD
5V
GND
GPIO1-1
GPIO1-2
GPIO1-3
*5_ARD
5V
GND
SERVO1-1
SERVO1-2
SERVO1-3
HM-11
UART_RTS
UART_TX
UART_CTS
UART_RX
NC
NC
NC
NC
PIO0
PIO1
PIO2
PIO3
GND
RESETB
NC
VCC
TX_ARD
RX_ARD
R1
1K
2K
R2
GND
DD_BLE
DC_BLE
RESET_BLE
GND
3.3V
FLASH_BLE
3.3V
GND
DD_BLE
DC_BLE
RESET_BLE
MyPOV1-2
25/05/2016 22:07:37
Sheet: 1/1