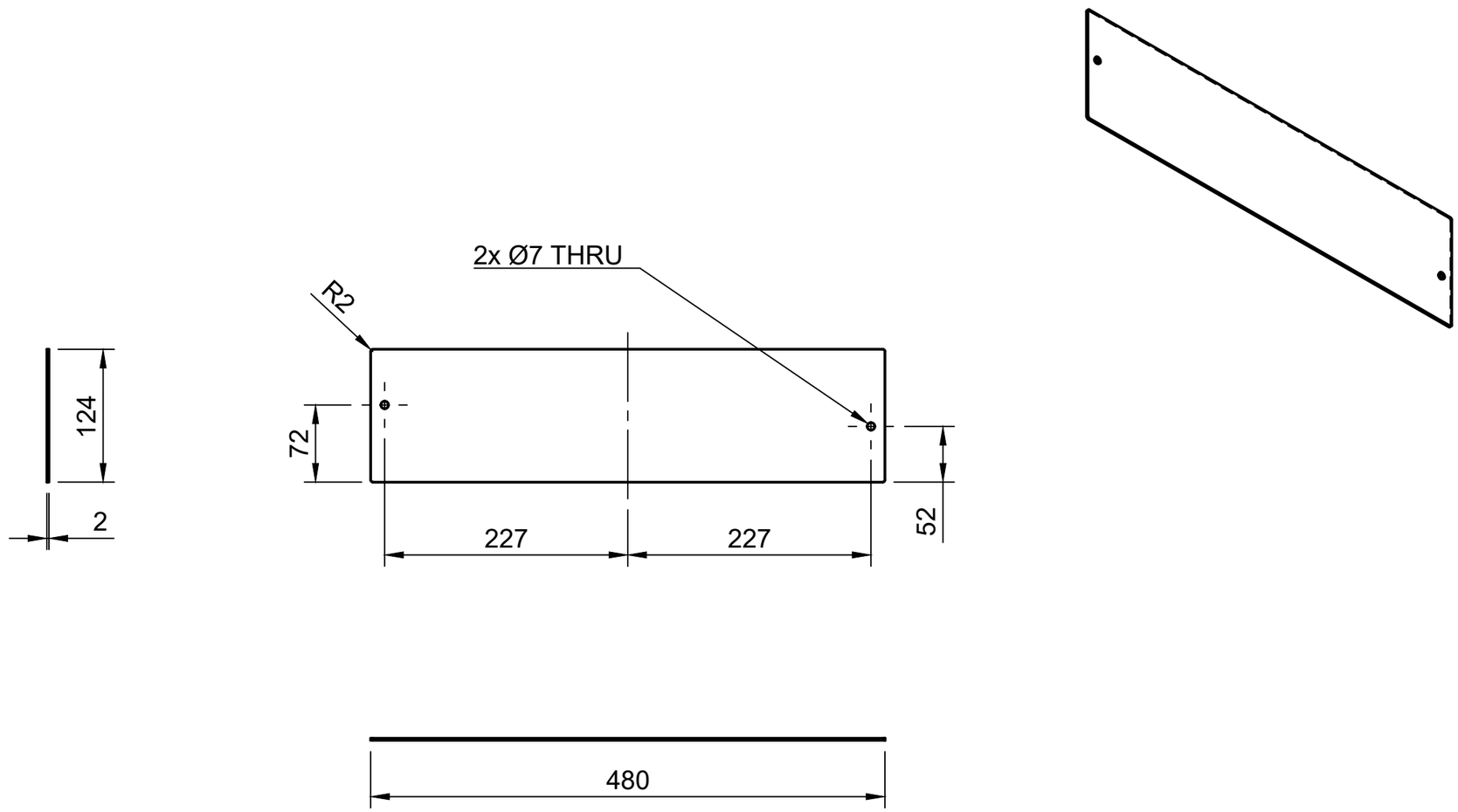

Rev	Date of issue	Modifications
2	18/03/2022	10mm shorter, shifted hole positions
1	13/03/2022	

Dept.

Technical reference

Created by: S.S. 13/03/2022

Approved by

Default Material:
Aluminium 1050A 2mm sheet
Ref BOM for alternative specs

Default Tolerances
Linear: ±0.25mm
Angular ±5°
Radius: ±0.5mm
BREAK SHARP EDGES

Scale 1:5 Units: mm

Document type

Document status

Title: AC2_C_FEP_16HZ Fan Enclosure Plate 20 Inch Horizontal

DWG No.: AC2_C_FEP_16HZ

Rev.	Date of issue	Sheet
2	18/03/2022	1/1