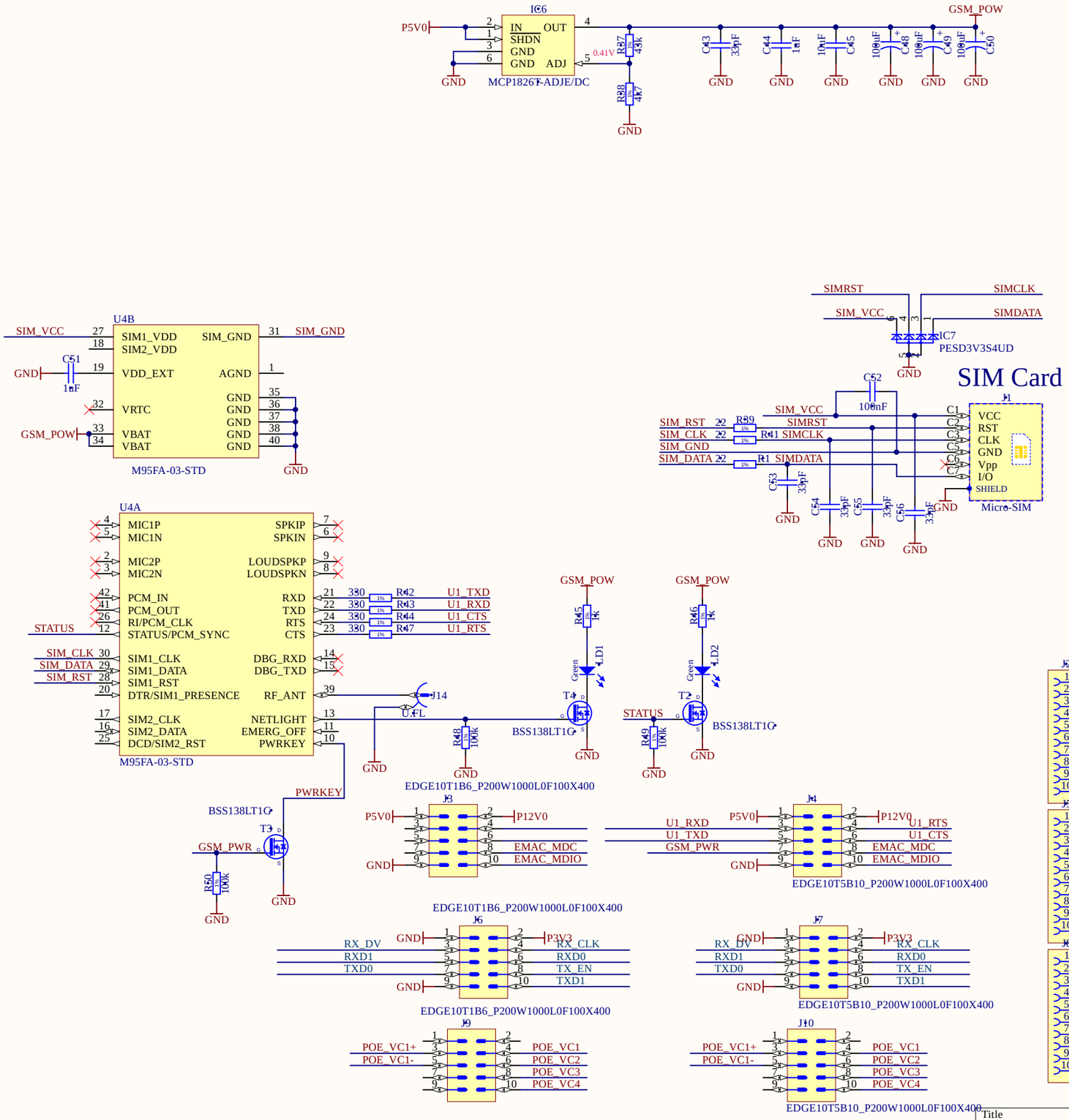

Title		
Size A3	Number	Revision
Date: 04.03.2018		Sheet of
File: D:\Dropbox\..\Sensor_Box_GPRS.SchDoc		Drawn By:

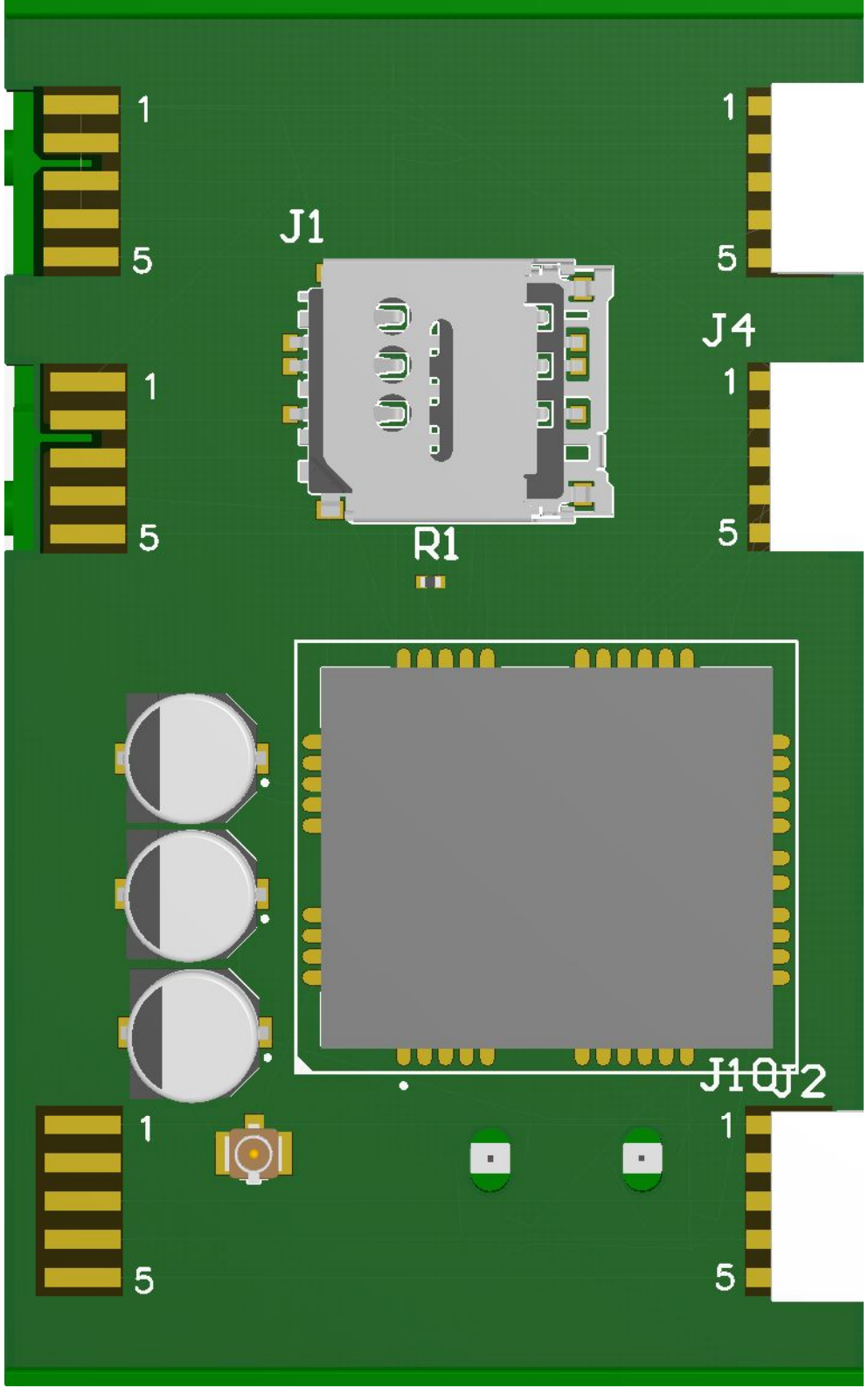
1
5
1
5
J1
R1
1
5
J4
1
5
J1
J2
1
5
1
5

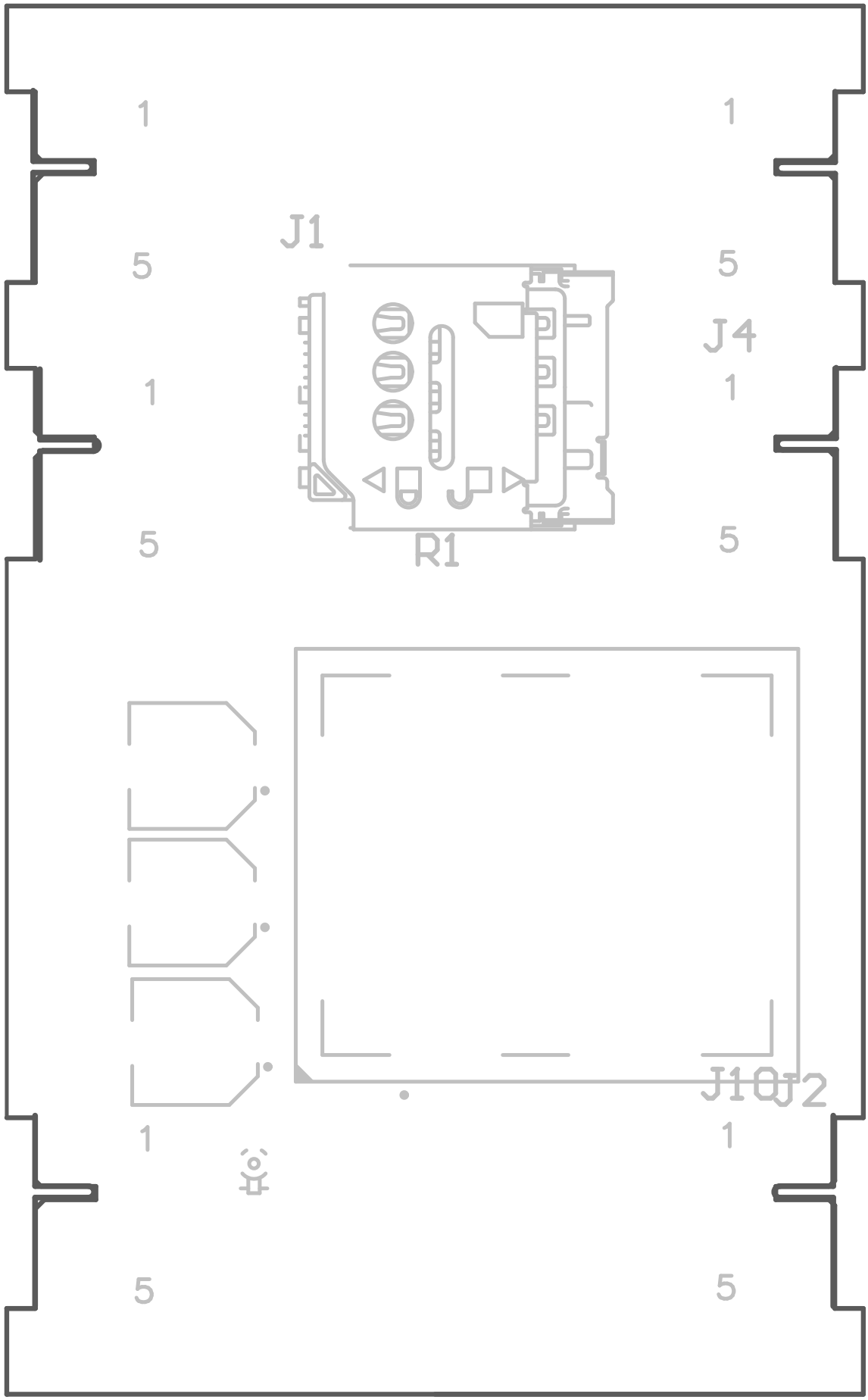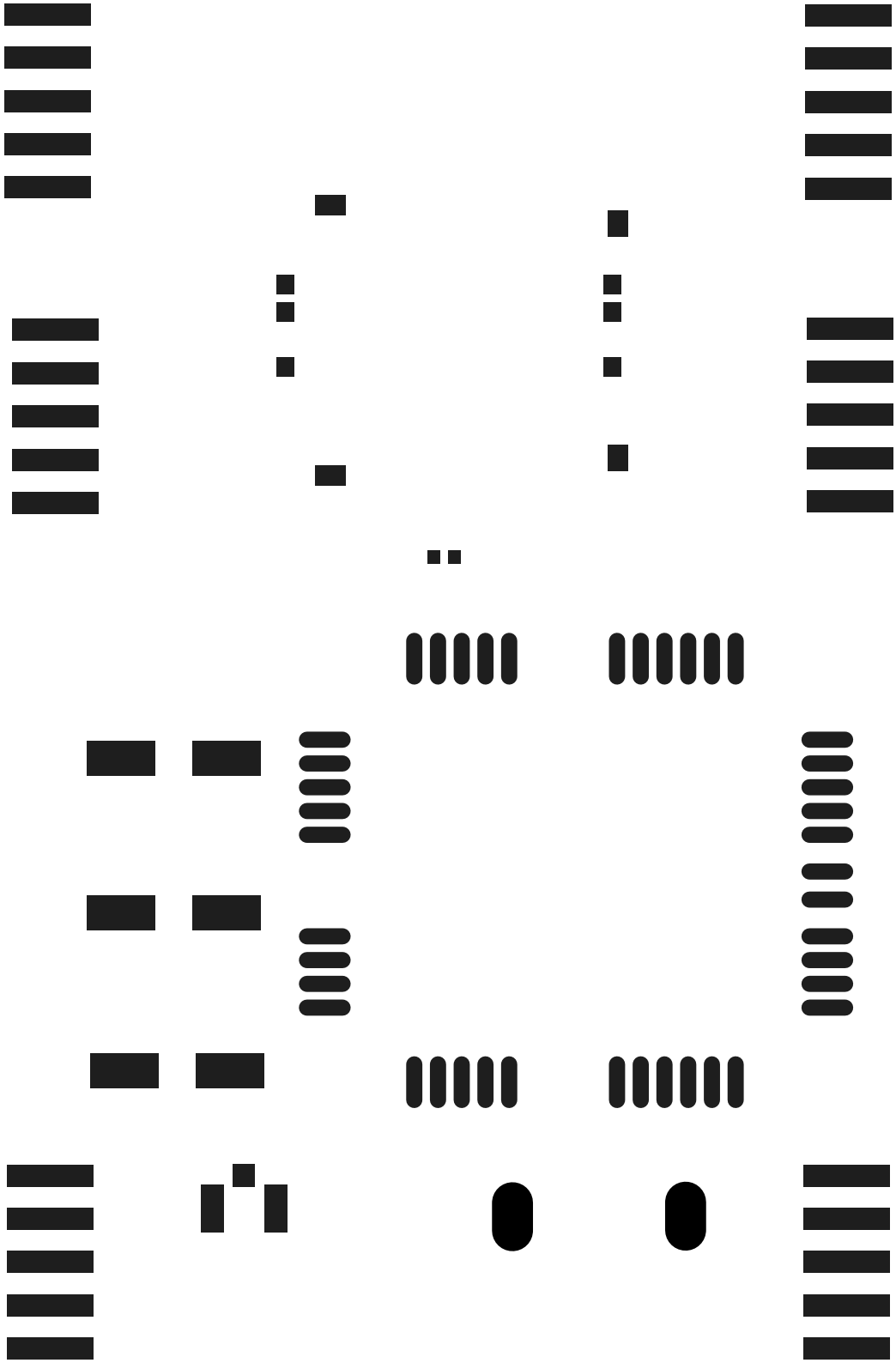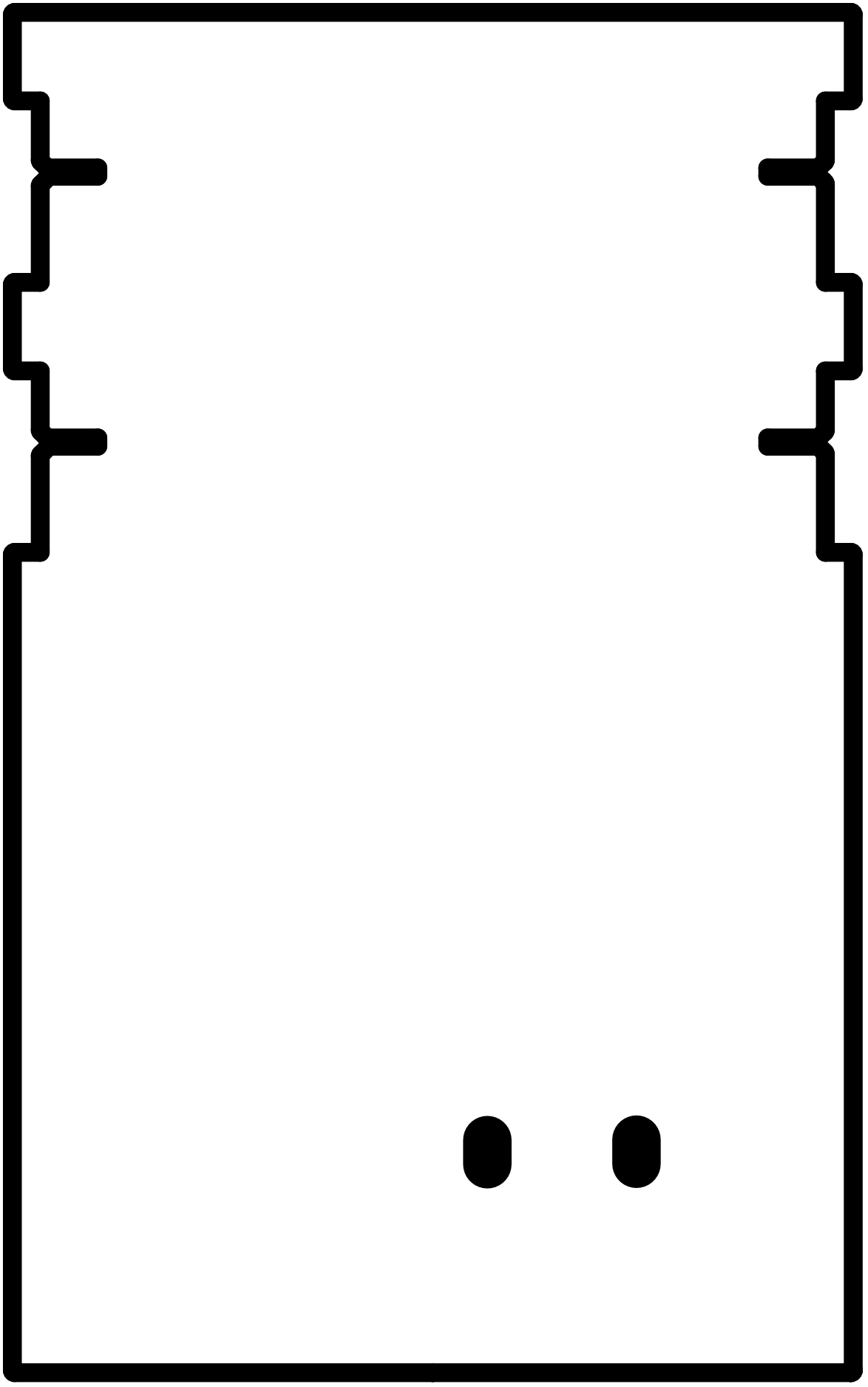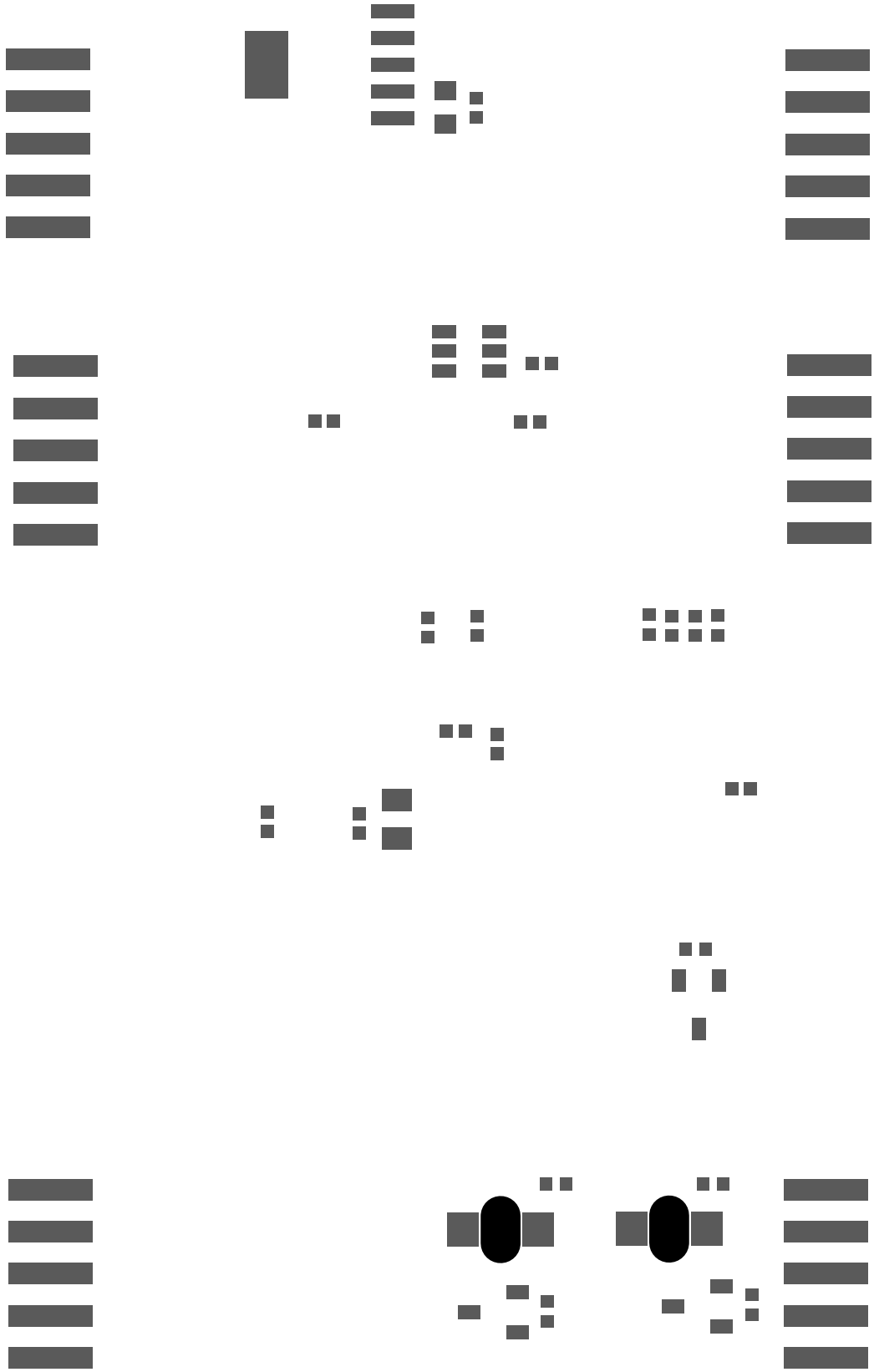
1
1
J1
5
5
J4
1
1
5
R1
5
J1QJ2
1
1
5
5