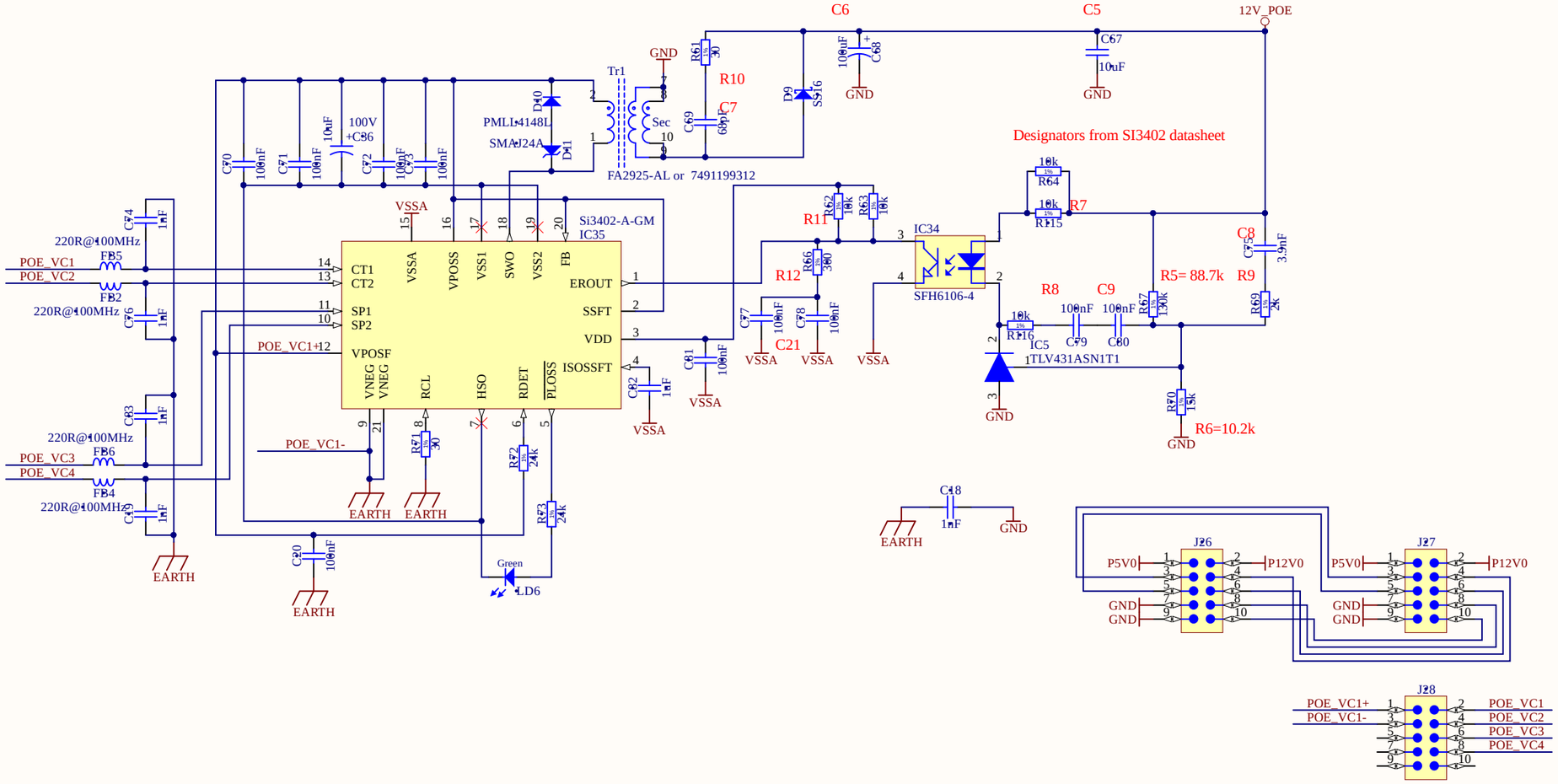

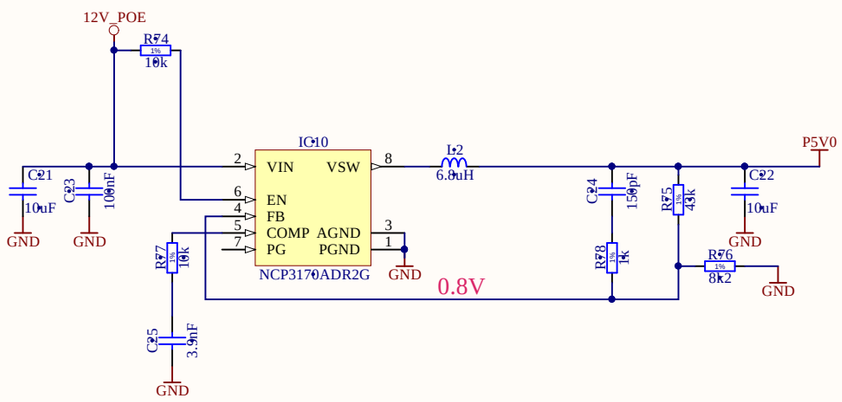

Title		
Size A3	Number	Revision
Date: 22.01.2018		Sheet of
File: D:\Dropbox\..\Sensor_Box_PoE.SchDoc		Drawn By:

Collision
1
1

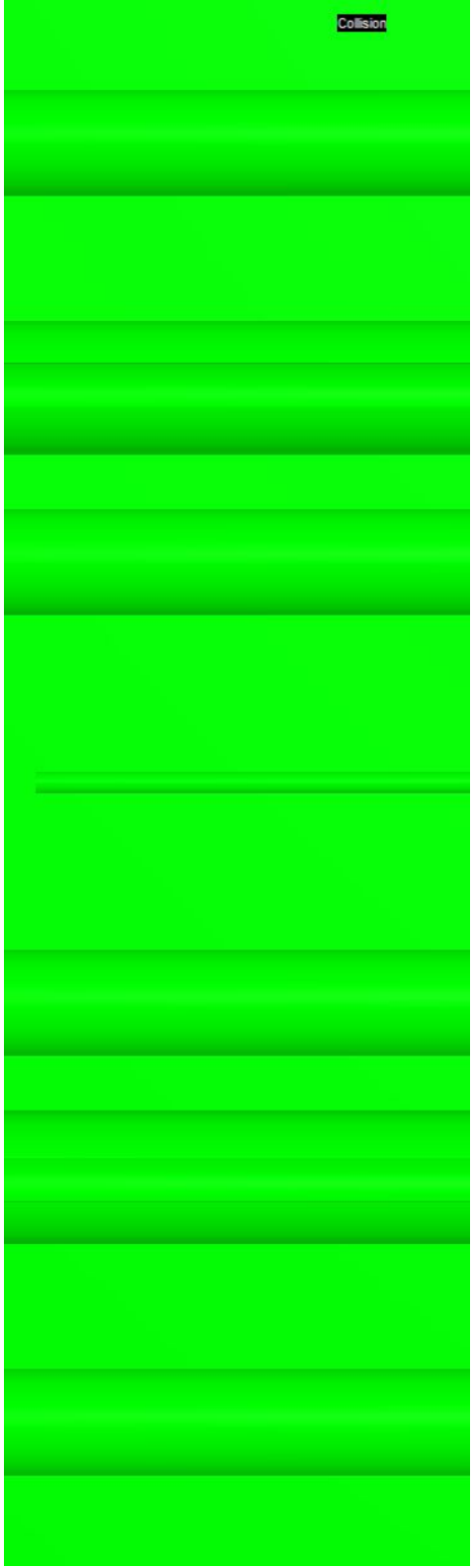
Collision

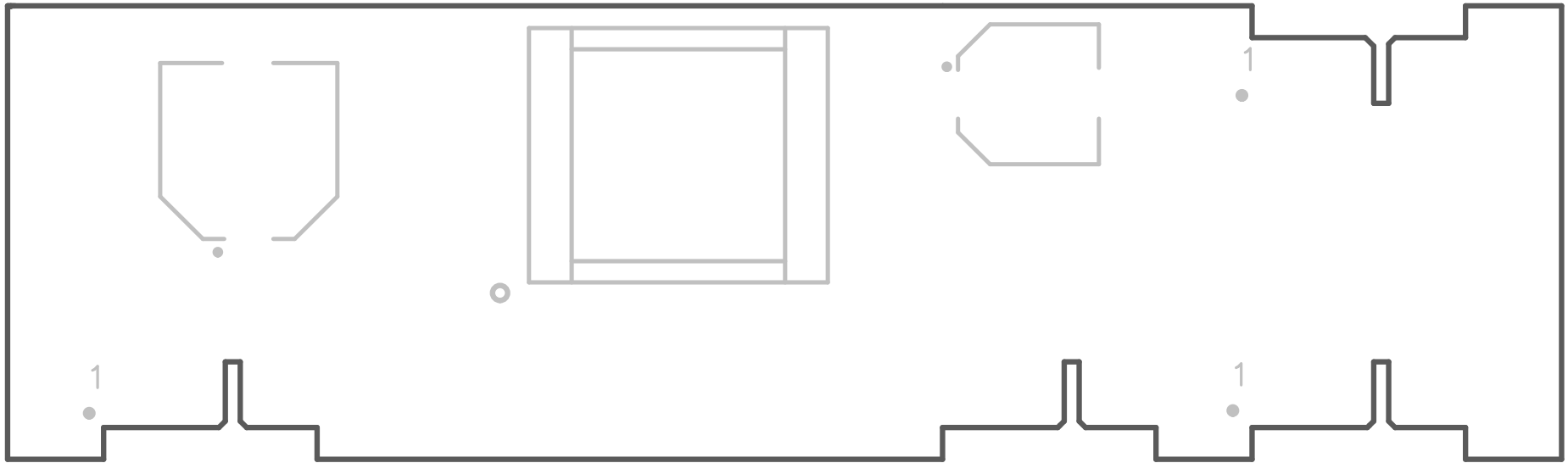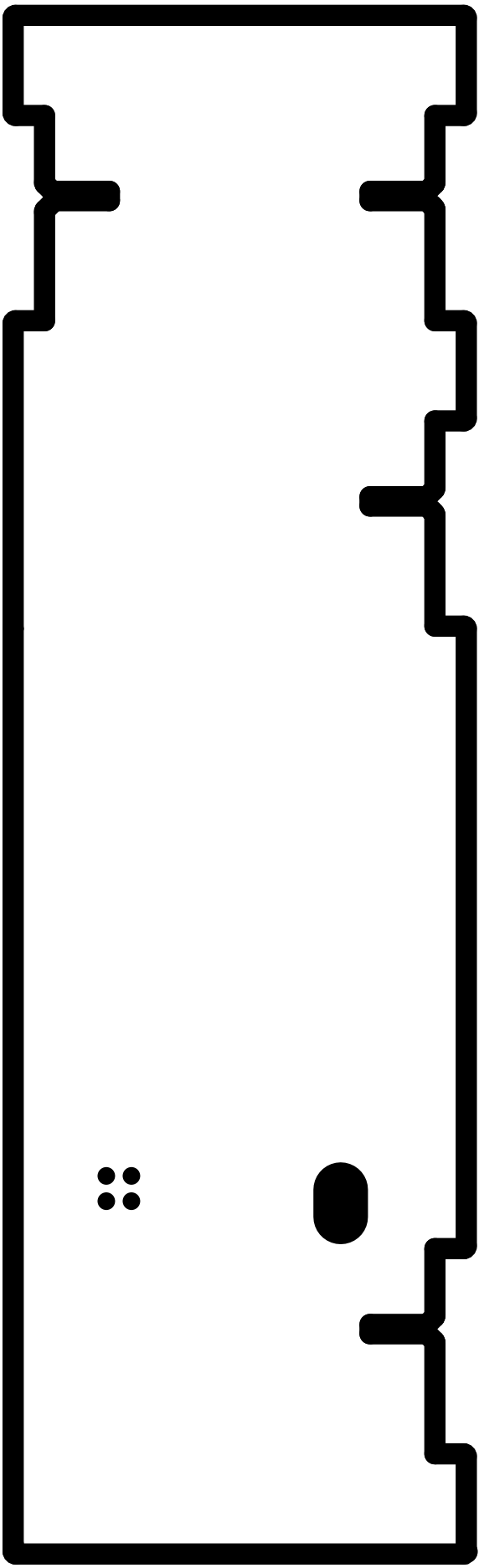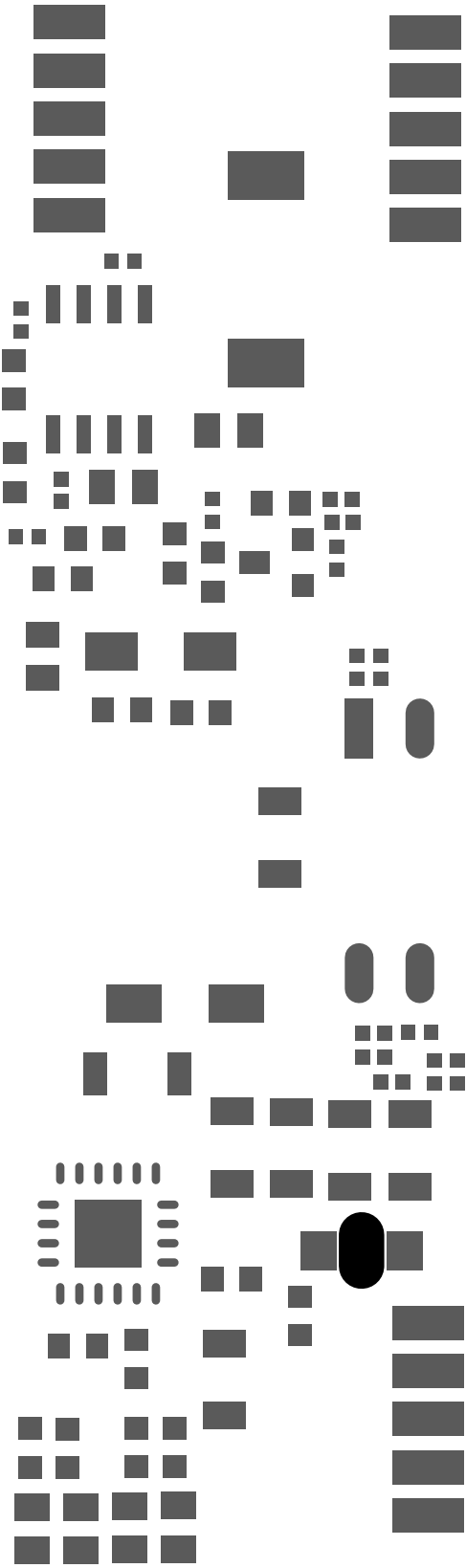
1
1
1