Individual Lab Report (ILR03)

Motor Lab

Name: Hongru Liu

Team: Team 2

Andrew ID: hongrul

Teammates: Hongru; Yechen; Hongfei; Dan

Submission Date: [2026-02-19]

Individual Progress

Since the last lab period, we focused on documenting and refining the mechanical design state for System Demo #1 using an equivalently detailed CAD model (Figures 1–4). The CAD captures the overall chassis packaging, the gear transmission layout, the wheel modules, and the Klann-style side leg mechanisms, allowing us to check motion clearances and mounting interfaces before fabrication.

In parallel, I drafted a torque-estimation framework for tank-style motion that is suitable for motor selection. Instead of using robot height as a lever arm, the model maps required traction force to wheel torque using the drive wheel (or drive sprocket) radius, then back-calculates motor torque through the reduction ratio and drivetrain efficiency.

Torque framework (symbols to be substituted later):
- Total traction force: F_total = C_rr*m_total*g + m_total*a + m_total*g*sin(theta)
- Total wheel torque: T_wheel_total = F_total * r_wheel
- Motor torque per side: T_motor = (T_wheel_total / N_motors) / (G * eta)
- Apply safety factor: T_required = SF * T_motor

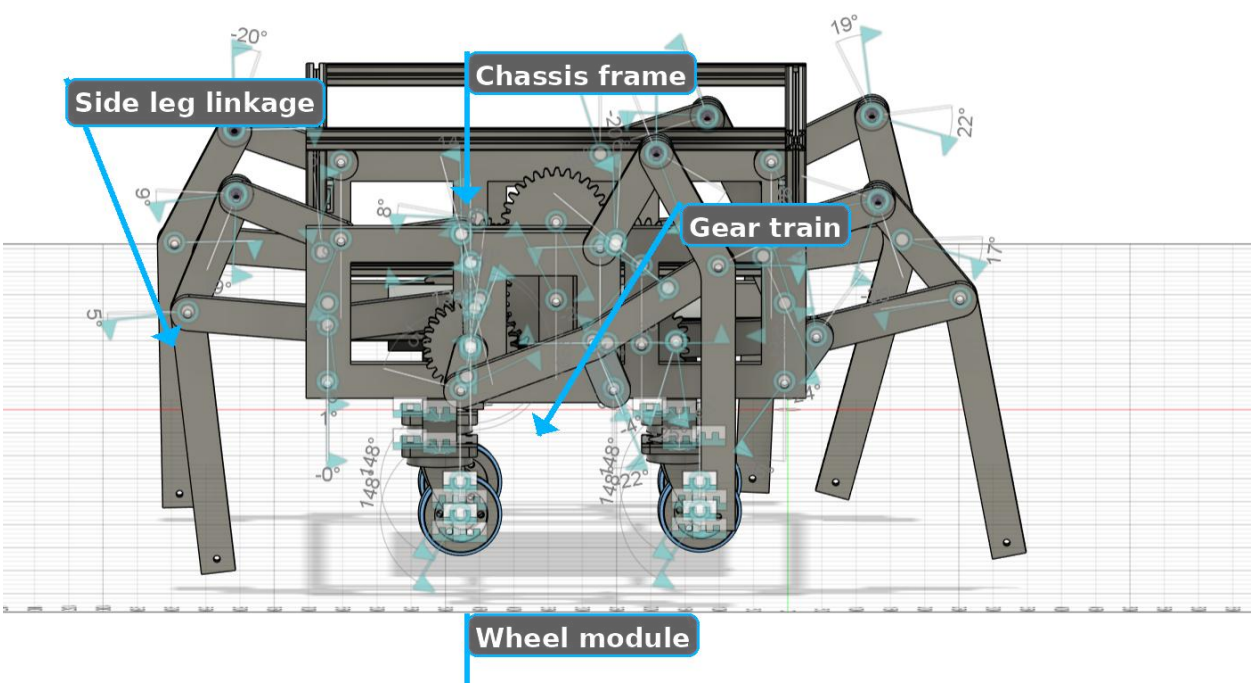

Figure 1. Side view CAD of the current assembly with key subsystems labeled (leg linkage, gears, wheel module, and chassis frame).

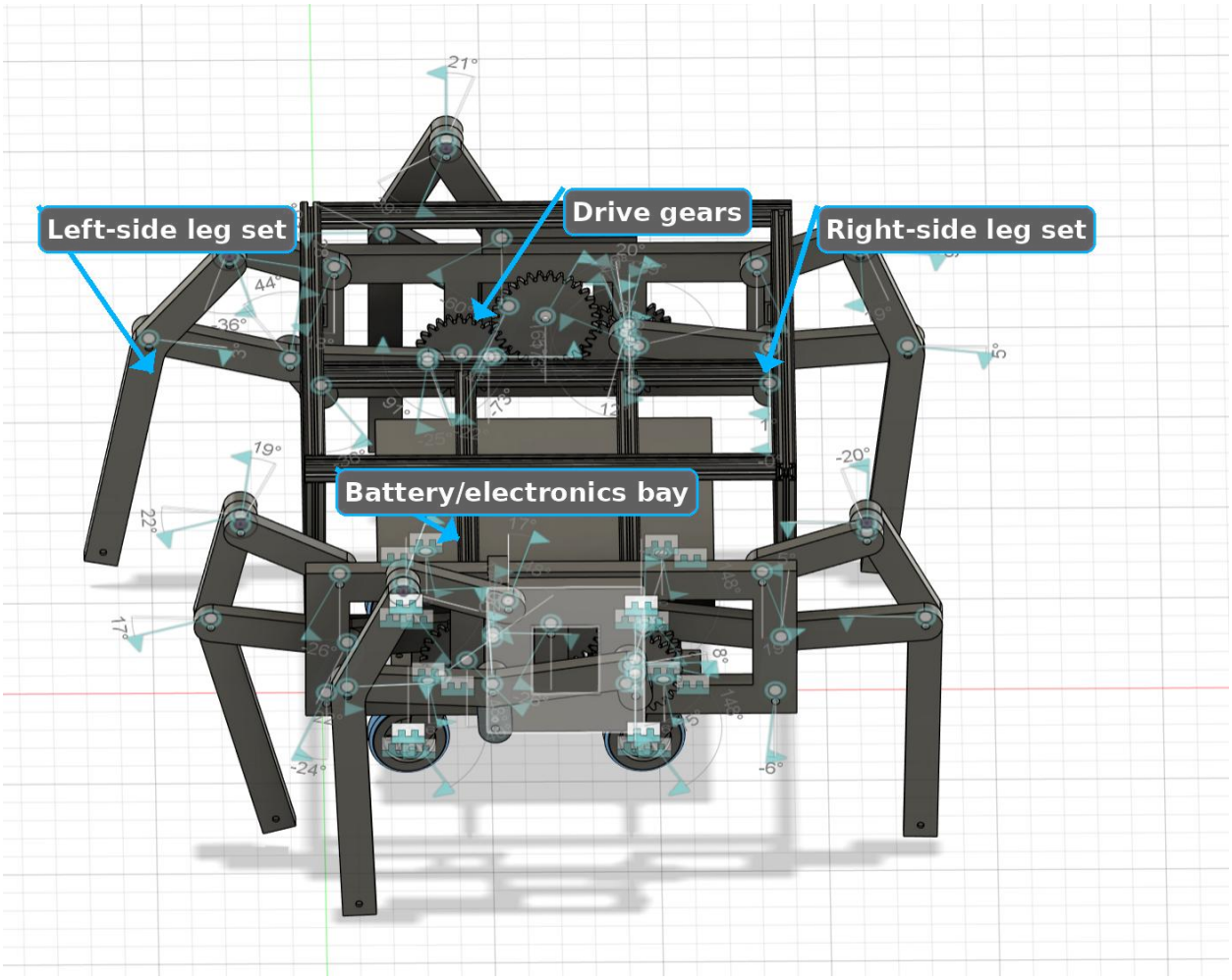

Figure 2. Top view CAD showing drivetrain gear placement and left/right leg sets; central bay reserved for battery and electronics packaging.

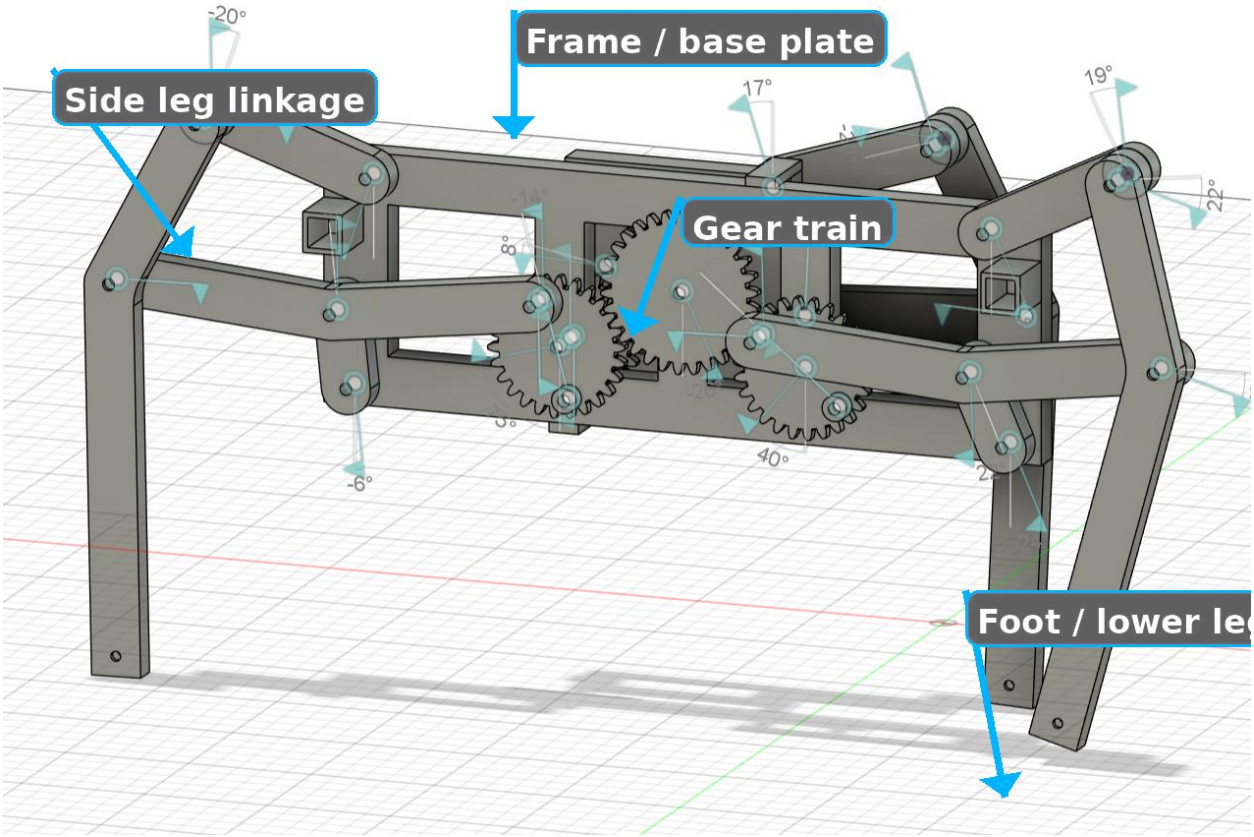

Figure 3. CAD view of one side leg mechanism with key subsystems labeled (linkage, gear train, base frame, and foot contact).

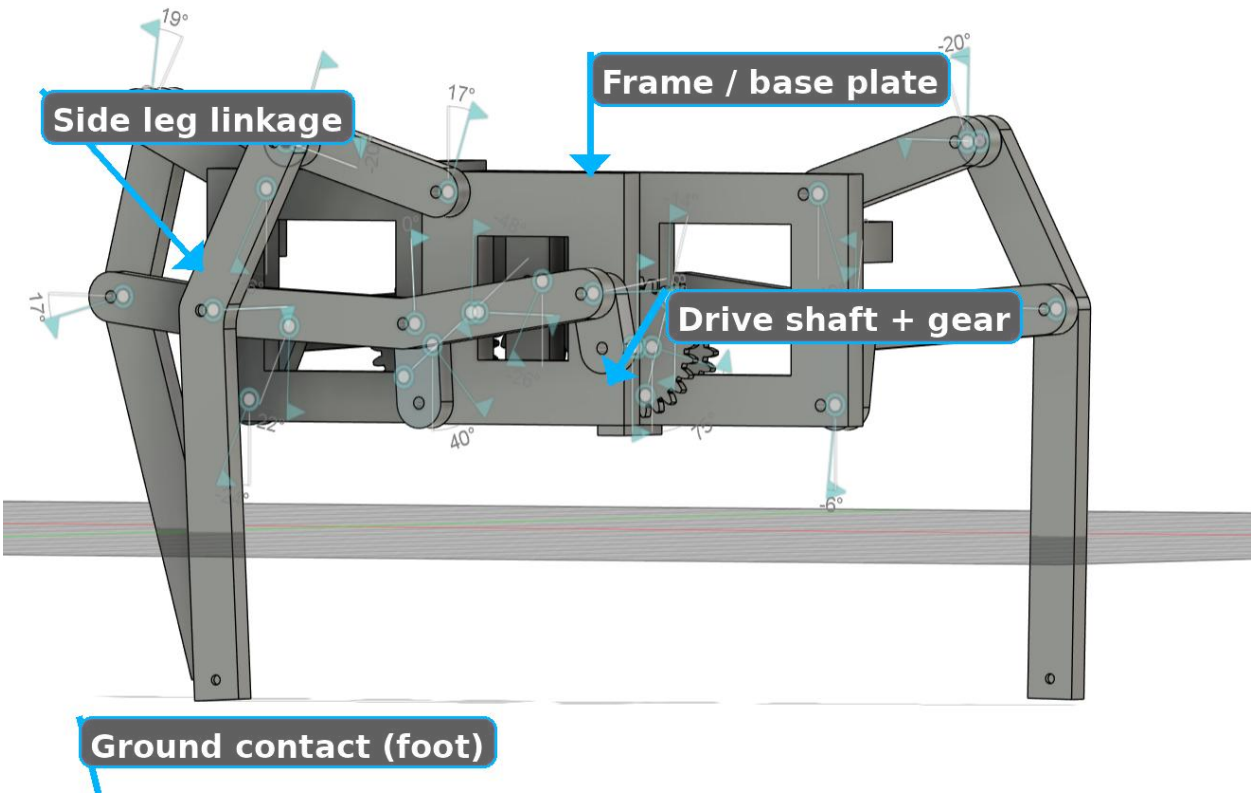

Figure 4. Alternate CAD view highlighting the drive shaft/gear and linkage motion envelope relative to the frame and ground contact.

Challenges

The largest uncertainty is translating high-level requirements (payload, footprint, and speed) into a realistic motor torque requirement. A simplified friction-based calculation can overestimate torque if the lever arm is chosen incorrectly or if the friction coefficient is treated as the driving resistance rather than a traction limit. We are aligning on wheel radius, expected operating surface, and target acceleration so that torque can be computed at the wheel first and then mapped to the motor.

A second challenge is achieving the required reduction without a multi-stage gear train. We are evaluating integrated gearmotors or a single gearbox combined with belt/chain reduction to minimize part count while maintaining alignment and serviceability.

Teamwork

Mechanically, I coordinated with teammates to ensure the chassis envelope, wheel module mounting, and leg mechanism interfaces are consistent across the CAD assembly. Hongfei

mainly designed the CAD model, like legs mounting and chassis design. I did the motor selection by calculating the torque for motors. Yechen was trying to figure out how to use simulation tools. Dan charged on overall software design. We were also working in parallel on electronics packaging and control architecture so that motor/controller/battery selections match the available volume.

Plans

Before the next demo, our team will complete an initial controller over integration with the GUI so we can reliably send basic drive commands, and we will refine the leg design and build a prototype to validate motion and clearances. We will also update the power schematic to reflect the battery, distribution, and protection plan, produce a finalized motor candidate list with key specs mapped to our required torque estimates, and finalize primary materials for the chassis and linkage parts. We will also demonstrate a basic ROS behavior tree that shows the core system states and transitions for operating the robot.