Individual Lab Report (ILR06)

Motor Lab

Name: Hongru Liu

Team: Team 2

Andrew ID: hongrul

Teammates: Hongru; Yechen; Hongfei; Dan

Submission Date: [2026-03-17]

Individual Progress

Since the last lab period, I helped move the robot from an early drivetrain estimate toward a more realistic system configuration for the 3/16 milestone and the 3/23 plan. By 3/16, our team completed the before-and-after leg design review, checked manufacturability, clarified the joint mounting approach, ordered the required parts for the leg and joint assemblies, completed a hexapod simulation with load, mounted the onboard computer on the final surface-mount board, and ordered motors. These tasks gave us a clearer baseline for the next stage of physical integration and reduced uncertainty in both fabrication and packaging.

My main individual contribution during this period was motor selection and drivetrain refinement. I finally found a motor option with a reasonable price, which avoids ordering from China and reduces both lead time and tariff cost. However, after comparing the candidate motor against the estimated loading condition, I found that its torque is still not high enough for the intended robot operation. To address this, I also selected a TG Series 60 mm 50:1 planetary gearbox with 15 arc-min backlash for servo motors. This change improves the available output torque while keeping the overall procurement plan within budget. Figure 1 shows the current CAD state of the chassis and leg assembly that this motor and gearbox choice must fit into.

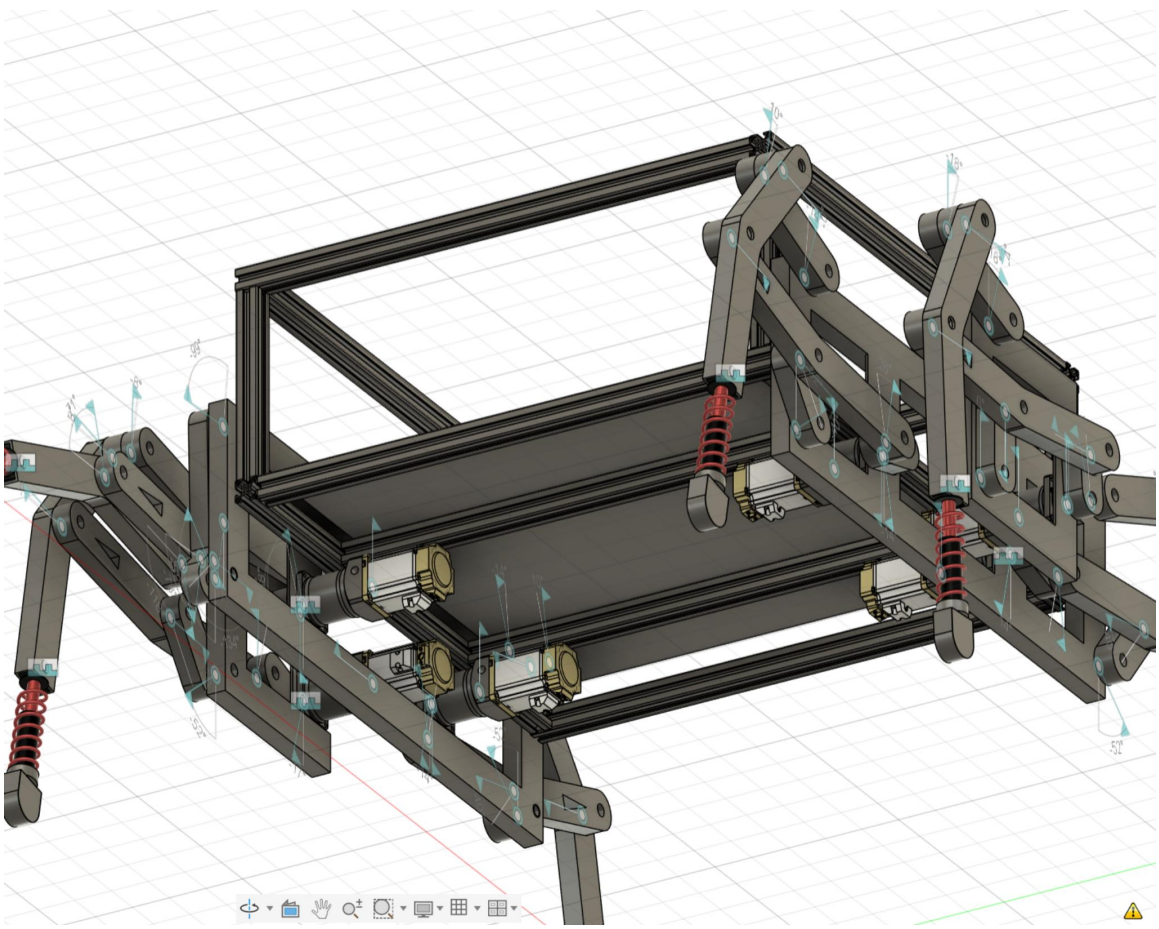

Figure 1. *CAD model of the robot chassis and leg assembly showing the current frame layout, leg linkage structure, and available integration space for the drivetrain and onboard components.*

Challenges

The main challenge I faced was balancing torque requirement, price, and availability at the same time. Some earlier motor options looked acceptable at first, but once shipping and tariff cost were considered, they were no longer realistic for our budget. The current motor I found is much more practical to purchase, but the motor alone is still underpowered for the loaded condition. This means the selection process cannot stop at finding a cheaper part; it must also account for real drivetrain performance under load.

A second challenge is that adding a gearbox improves torque but also creates integration constraints. The gearbox changes the packaging envelope, affects how the joint and motor will be mounted, and may influence response speed and assembly complexity. Because of this, the drivetrain decision now has to be checked not only in calculation but also against the real chassis geometry and the planned single-leg prototype.

Teamwork

The team made good progress together toward the milestone and prepared a clear plan for 3/23. Hongfei continued advancing the CAD design, including the chassis structure, leg mounting details, and overall manufacturability. Yechen supported CAD design and simulation work, including the loaded hexapod model that helps us compare hardware decisions against expected operating conditions. Dan continued pushing the software and system integration side so that the hardware layout remains compatible with later control, SLAM, and navigation-stack work.

My work on motor selection and gearbox planning supported these parallel efforts directly. The drivetrain choice affects chassis assembly, the single-leg prototype, and the later motor-control demonstration.

Plans

Before the 3/23 milestone, I plan to help verify the updated motor and gearbox combination against both the CAD packaging constraints and the simulated loading condition. I also plan to support physical chassis assembly and the single-leg prototype so that we can test whether the drivetrain choice is practical in the real mechanism rather than only on paper.

In addition, I plan to assist with hardware integration as the camera, microcontroller, and IMU are mounted to the chassis. My goal for the next period is to move from part selection into validation by confirming that the chosen drivetrain can support assembly, prototype testing, and the upcoming wireless motor-control demonstration from a laptop.