Individual Lab Report (ILR07)

Motor Lab

Name: Hongru Liu

Team: Team 2

Andrew ID: hongrul

Teammates: Hongru; Yechen; Hongfei; Dan

Submission Date: [2026-03-23]

Individual Progress

Since the last lab period, our work has transitioned from drivetrain selection and CAD validation into physical system assembly. We now have most components delivered, which allows us to begin full chassis integration for the 3/23 milestone. I verified the compatibility between the selected motor, gearbox, and mounting bracket, ensuring that the bracket geometry aligns correctly with both the motor housing and the aluminum extrusion frame. As shown in Figures 1 and 2, the motor mount bracket has been successfully matched, which reduces uncertainty in assembly and allows us to proceed directly to hardware integration.

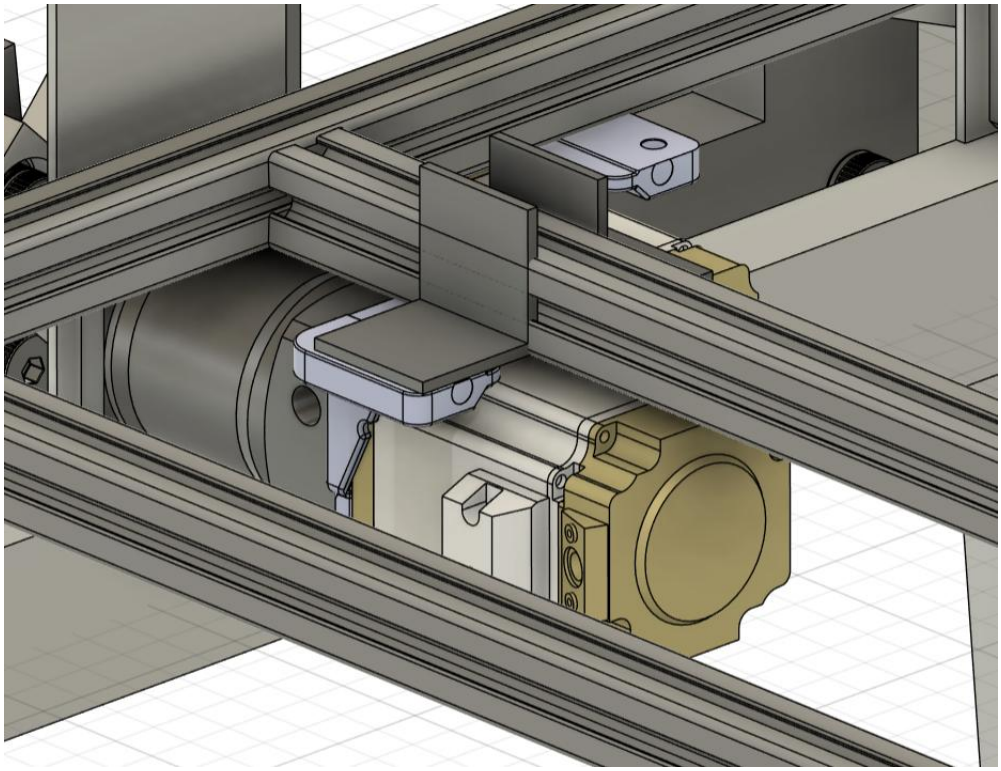

Figure 1. Motor mount bracket CAD showing alignment with motor and frame.

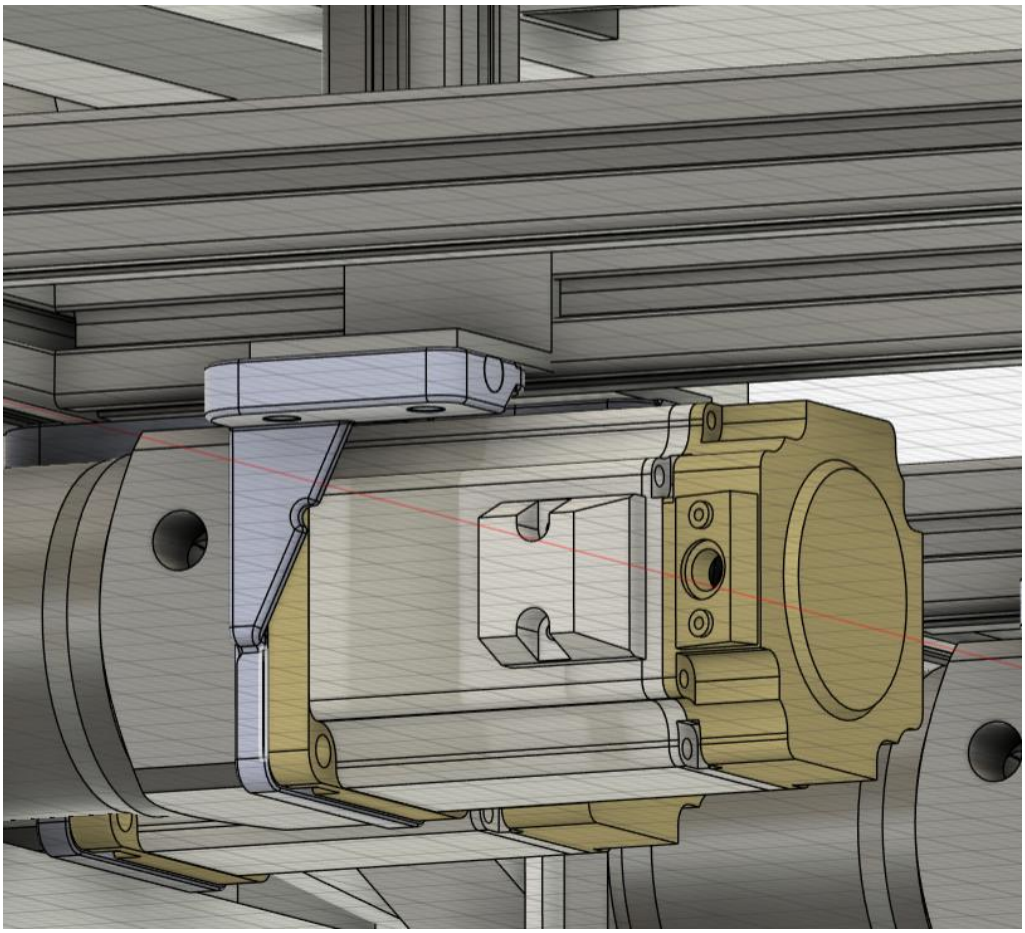

Figure 2. Close-up view of bracket and motor interface demonstrating proper fit.

In addition, we together moved the system toward full assembly by planning how the motor modules, leg mechanisms, and chassis structure will be installed together. The final CAD design (Figure 3) are now shown the complete system configuration, including leg linkage placement, drivetrain integration, and available space for electronics. This finalized design serves as a direct reference for the physical build and ensures consistency during assembly.

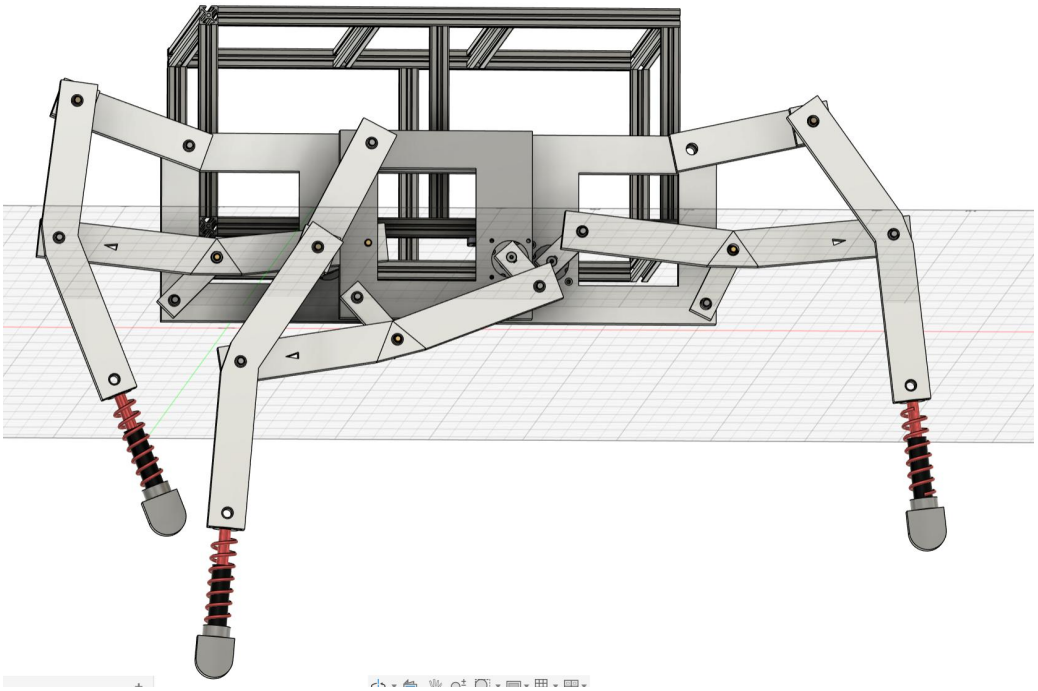

Figure 3. Final system CAD showing chassis, drivetrain, and leg mechanisms integrated.

Challenges

A primary challenge is maintaining proper alignment during assembly, especially for the motor mounts and leg mechanisms. Even small misalignment between the motor, gearbox, and linkage can introduce friction or reduce motion efficiency. To address this, we plan to assemble incrementally and verify alignment at each stage.

A second challenge is the limited space available for electronics and wiring inside the chassis. As we move into physical integration, routing cables while avoiding interference with moving parts becomes more difficult. We will mitigate this by pre-planning wiring paths and securing cables during installation.

Teamwork

The team worked closely to transition from design to assembly. Hongfei continued refining the CAD model and ensuring that all mechanical interfaces are consistent and manufacturable. I focused on motor integration, including bracket verification and drivetrain feasibility. Yechen supported simulation and system validation to ensure that our hardware decisions align with expected performance. Dan continued developing the software and control framework so that the hardware integration remains compatible with later system functionality. These parallel work helped ensure that mechanical, electrical, and software components are aligned as we move into the assembly phase.

Plans

Before the next demo, we plan to focus on assembling the motor modules onto the chassis and ensuring proper alignment with the drivetrain and leg mechanisms. I will also support the installation of the leg mechanisms and assist with electronics integration, including PCB mounting and wiring layout. In addition, I will help validate the assembled system by checking mechanical stability and preparing for initial testing of motion and motor control. The goal for the next period is to complete a functional hardware setup that enables early system testing and integration.