Mechatronic Design Individual Lab Report (ILR03)
Name: Hongfei
Team: Team 2
Teammates: Hongfei Liu, Hongru Liu, Daniel Lazaro, Yechen Zheng
ILR Number: ILR03
Submission Date: Feb. 19, 2026

Individual Progress

Since the previous presentation, I have focused on developing the second iteration of our hexapod robot that employs six Klann linkage legs driven by a centralized transmission system. The current design integrates two motors that drive multiple legs through a gear-based drivetrain, although a chain-driven alternative is under consideration. The main structural frame is constructed from 80/20 aluminum extrusion, which provides modularity and sufficient stiffness while allowing iterative redesign.

My primary contribution has been the mechanical integration of the drivetrain and linkage assemblies. I redesigned the chassis geometry to accommodate the Klann linkage kinematics while ensuring that the overall footprint remains within the required 5 ft × 5 ft constraint. I also modeled the gear transmission system that synchronizes multiple legs from a reduced number of motors. Compared to a traditional hexapod that uses at least twelve motors (two per leg), our configuration significantly reduces actuator count. Even if expanded to four motors in a future iteration, the total number remains substantially lower than fully independent actuation. This reduction in active degrees of freedom simplifies control logic and phase synchronization, shifting complexity from software to mechanical design.

In addition, I conducted preliminary torque estimations under static loading assumptions. Because multiple legs are mechanically coupled, each motor must support not only its own driven linkage but also distributed body weight and drivetrain losses. These early calculations informed our motor selection constraints and highlighted the need for careful transmission efficiency considerations.

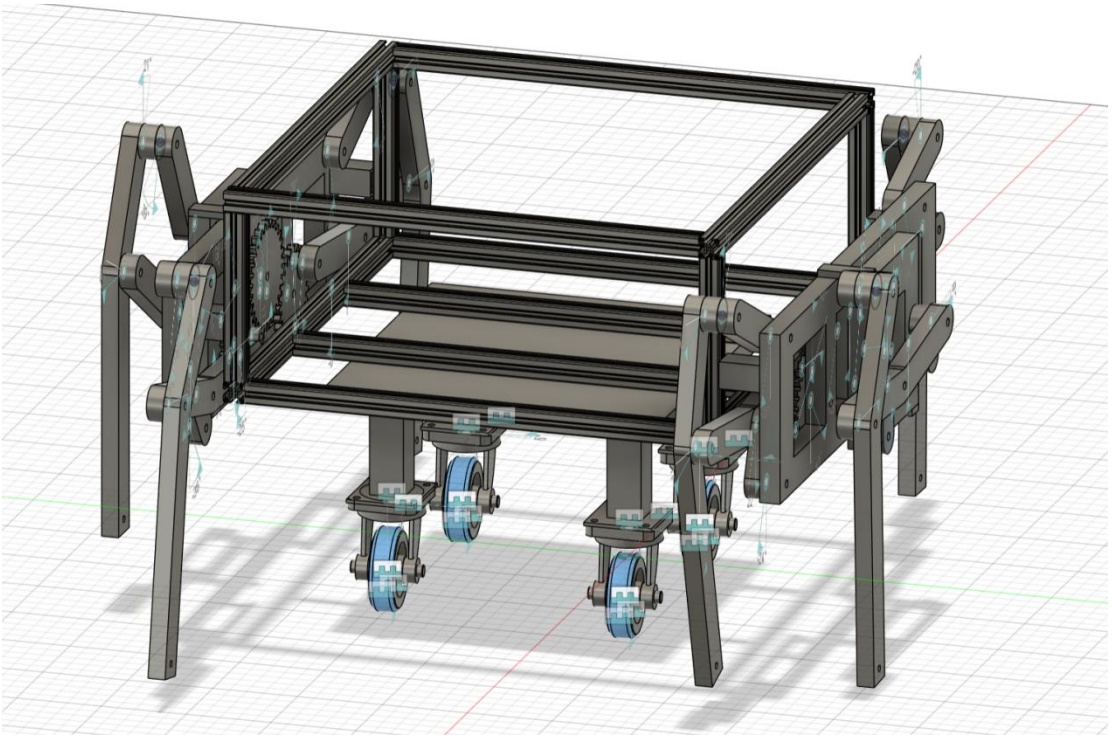

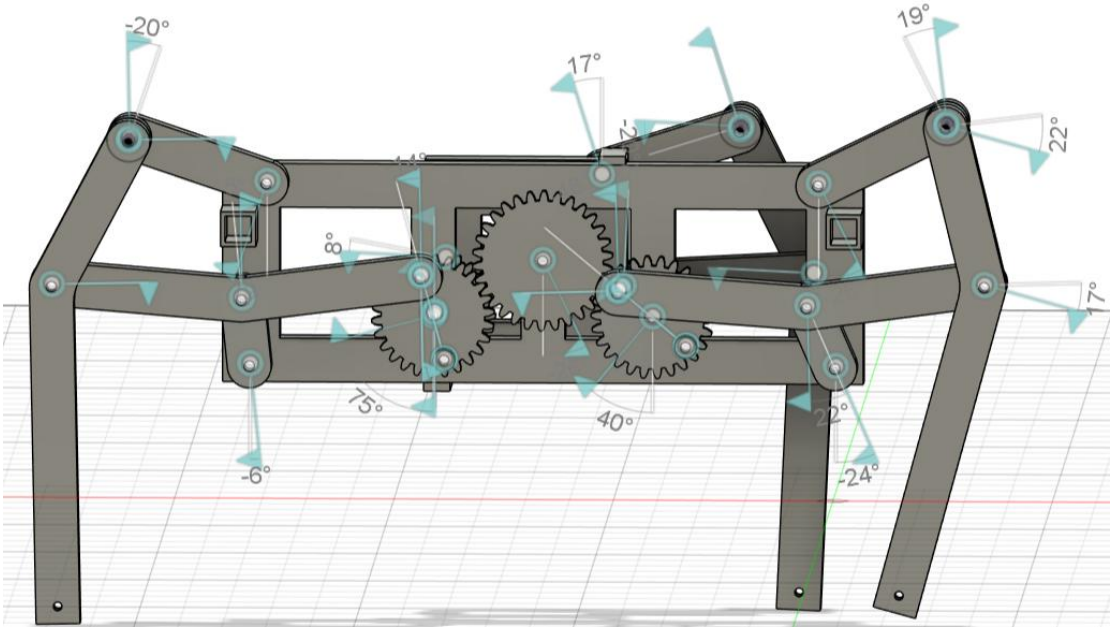
-20°
17°
19°
22°
8°
17°
75°
40°
22°
-6°
-24°

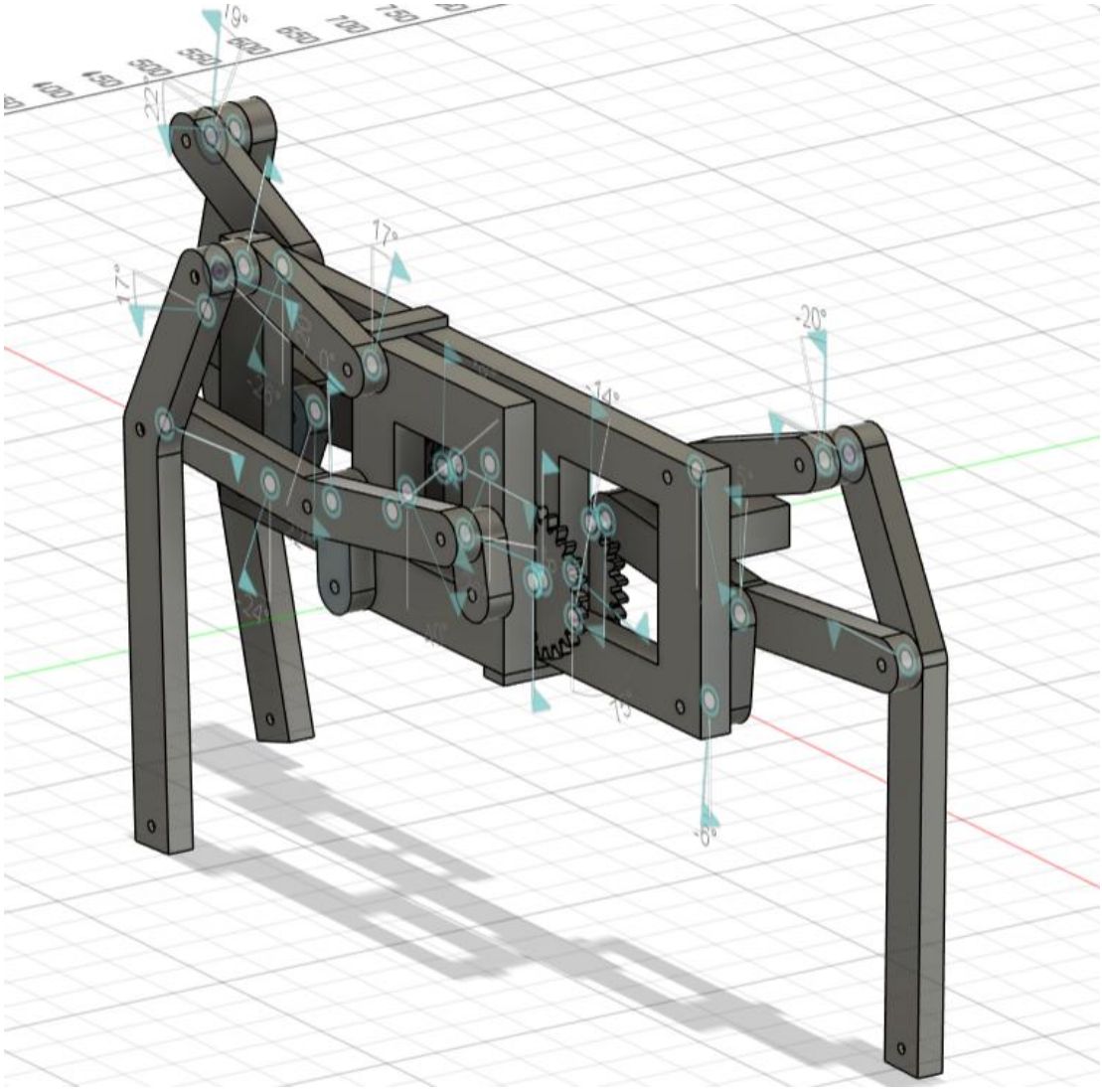

Figures shows the current CAD model of the robot. The 80/20 aluminum frame supports the Klann linkages on both sides of the body, and the drivetrain is centrally integrated. The compact nature of the Klann mechanism allows the system to meet footprint constraints despite the added structural complexity.

Challenges

The primary challenge of this iteration is the increased mechanical complexity introduced by centralized actuation. While reducing the number of motors simplifies the control architecture, it increases structural mass and drivetrain loading. The interconnected linkage system requires each motor to overcome body weight, joint friction, and ground reaction forces transmitted through multiple legs simultaneously. This configuration amplifies torque demand compared to independently actuated legs.

Another critical issue is tolerance stack-up within the Klann linkage geometry. The walking trajectory produced by the linkage depends on precise geometric

relationships among pivot points and link lengths. Small deviations in fabrication or assembly may distort the foot path, leading to uneven gait motion or binding. Because the robot uses six identical linkage assemblies, manufacturing tolerances may accumulate across the structure. I began identifying the most critical dimensions affecting trajectory accuracy and considering tighter tolerances or alignment strategies for load-bearing joints.

A further concern involves terrain interaction. When one leg encounters an elevated obstacle, load redistribution may occur abruptly, potentially increasing stress on the drivetrain and shifting the robot's center of mass. Without compliance in the system, such disturbances could compromise stability or increase motor torque requirements beyond safe limits.

Teamwork

This iteration required coordinated progress across mechanical, electrical, and software subsystems. While I concentrated on mechanical drivetrain integration and linkage refinement, Hongru was responsible to motor specifications and torque estimates, Yecheng developed a basic robot simulation model to validate gait assumptions before hardware implementation. Daniel worked on Jetson integration within ROS, establishing foundational communication nodes and refining the system architecture for command and state exchange. He also drafted the initial power schematic to define subsystem power requirements. These parallel efforts ensured that mechanical design decisions remained aligned with simulation, control, and electrical constraints.

Plans

Before the next lab demo, I will focus on improving terrain adaptability, drivetrain validation, and geometric precision. A key priority is designing a passive compliance mechanism for each leg. The goal of this system is to absorb shock loads and accommodate uneven terrain without transmitting excessive force into the drivetrain. I plan to investigate spring-based solutions, potentially incorporating compression or torsional springs positioned strategically within the linkage or foot assembly. The spring stiffness will be estimated using static load assumptions to ensure sufficient support while allowing limited vertical compliance.

I will also refine torque calculations by incorporating friction losses and conservative safety factors. A more detailed comparison between gear-driven and chain-driven transmission systems will be conducted to evaluate efficiency, backlash behavior, weight impact, and assembly tolerance sensitivity.

Finally, I intend to perform a tolerance stack-up analysis to determine which geometric parameters most strongly affect gait trajectory. Based on this analysis, I will define acceptable fabrication tolerances and explore alignment or adjustment mechanisms that can compensate for small deviations during assembly.