Mechatronic Design Individual Lab Report (ILR06)
Name: Hongfei
Team: Team 2
Teammates: Hongfei Liu, Hongru Liu, Daniel Lazaro, Yechen Zheng
ILR Number: ILR06
Submission Date: March. 17, 2026

Individual Progress

Since the last lab demo, I redesigned the side leg assemblies in CAD to reflect the updated system architecture, which now uses six motors instead of two. This change required a complete revision of the leg actuation layout, including motor placement, mounting interfaces, and integration with the chassis.

The updated CAD model includes all six motors as well as related electronic components associated with motor control, such as motor drivers and mounting provisions for wiring. In addition, I refined the leg design to reflect a more realistic manufacturing approach. Unlike the previous conceptual model, the new design incorporates detailed components such as bearings, bushings, shoulder bolts, and standard fasteners. This allows the design to better represent actual assembly constraints and manufacturability.

As shown in Figure 1, the full system assembly includes the updated six-motor configuration integrated into the chassis. The motors are mounted along the body frame and connected to the leg linkages, ensuring distributed actuation across all six legs.

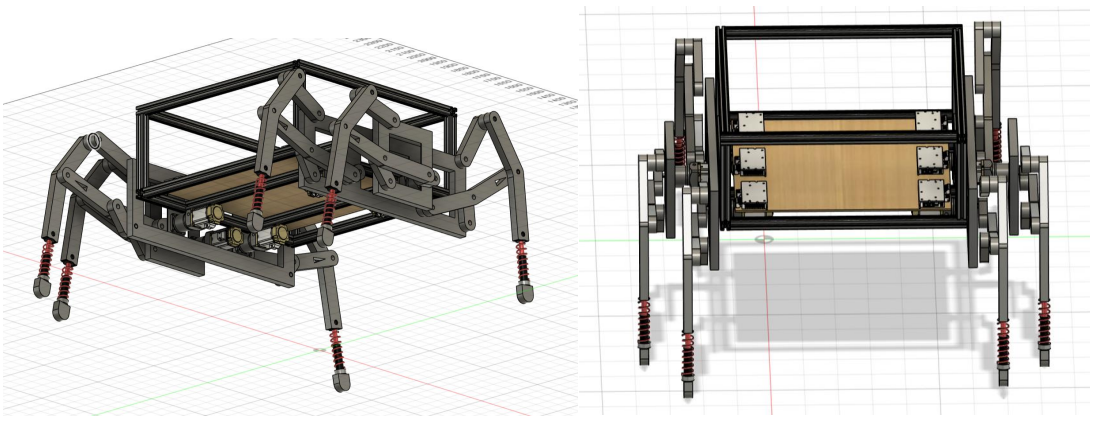

Figure 1. Full hexapod CAD assembly with six-motor configuration

I redesigned the side leg structure to improve manufacturability and assembly feasibility. As shown in Figure 2, the leg linkage system includes precise mounting locations for joints and fasteners, replacing the earlier idealized geometry. During this process, I also evaluated different connection methods for structural members, including welded joints between straight tubes. However, due to the need for adjustability, alignment precision, and ease of assembly, the final design may prioritizes bolted and bracket-based connections over permanent welding.

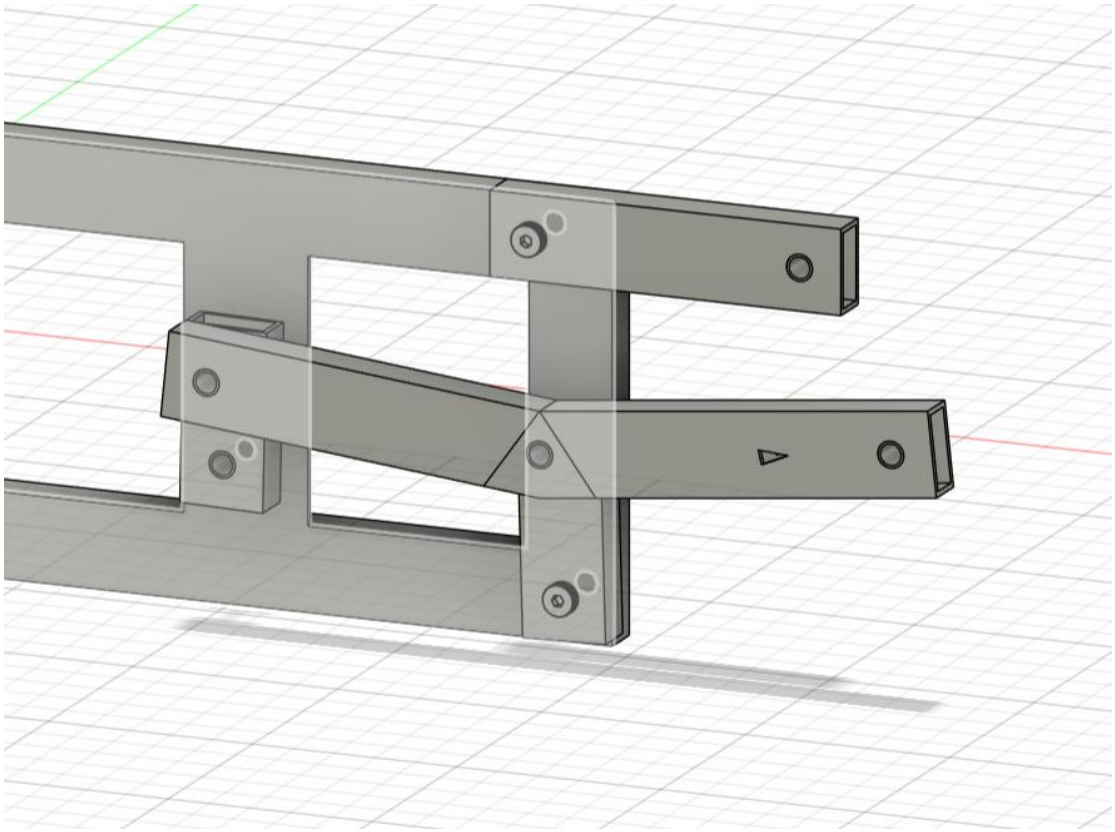

Figure 2. Updated side leg design with manufacturable linkage geometry

Finally, Figure 3 shows a detailed cross-sectional view of a joint assembly, including bearings, bushings, and a shoulder bolt. This level of detail ensures proper alignment, load transfer, and rotational motion in the final build.

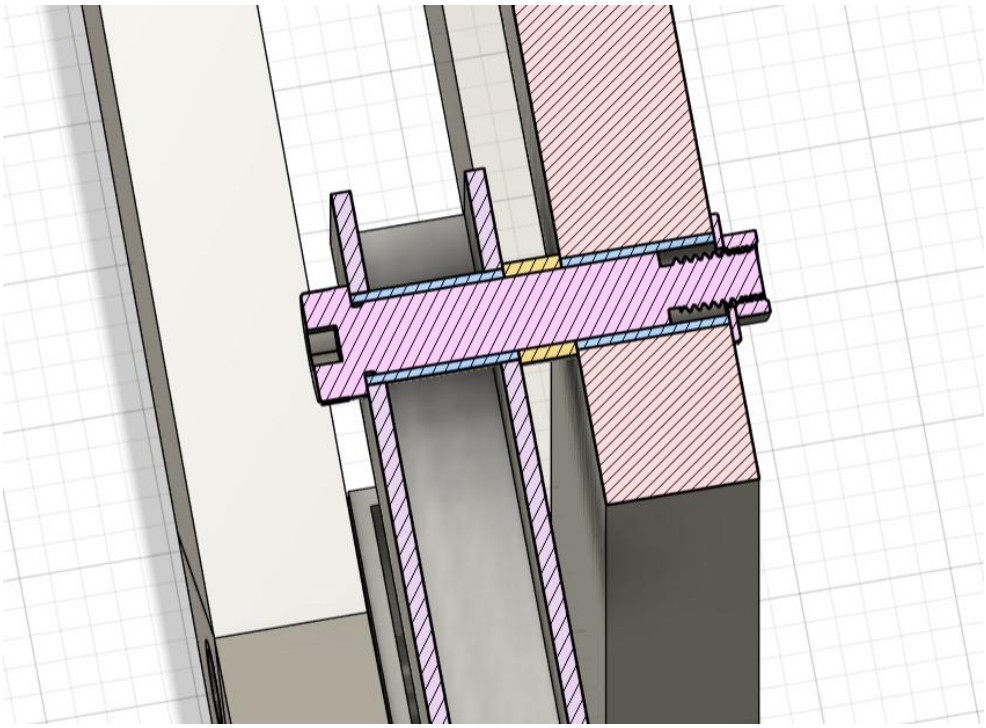

Figure 3. Joint cross-section with bearing, bushing, and shoulder bolt integration

Overall, the new CAD model transitions the system from an idealized concept to a more practical and implementable mechanical design.

Challenges

As the level of design detail increased, more practical challenges emerged, particularly in the leg joint assemblies. One key issue is determining appropriate screw lengths and ensuring sufficient clearance between adjacent components. Because multiple linkages and supports are closely packed, additional spacing must be introduced to accommodate fasteners without interfering with motion or assembly.

This requirement directly impacts the structural design, as increasing spacing can affect stiffness and load distribution. Therefore, force analysis becomes increasingly important to ensure that the modified geometry can still withstand expected loads during operation.

Another challenge is balancing structural integrity with the project's budget constraint of $1000. To reduce cost and material usage, some leg components are designed as hollow structures while others remain solid where higher strength is required. This introduces a trade-off between weight, strength, and manufacturability that must be carefully evaluated in future iterations.

Teamwork

This week, the team collaborated closely on both mechanical design and system integration.

Yecheng and I worked on refining the leg design, including a comparison of the before-and-after configurations to improve manufacturability. We also specified detailed joint mounting methods, such as integrating ball bearings into the leg assemblies, and completed ordering all required parts for the leg and joint subsystems.

Daniel focused on system-level integration, including running hexapod simulations with load considerations and designing the computer mounting on the final surface board.

Hongru Liu was responsible for sourcing and ordering the motors, ensuring they meet the system's performance and budget requirements.

Plans

Before the next lab demo on March 23, I will focus on completing a single-leg prototype using final materials to validate the manufacturable design. At the same time, our team will work together to assemble the full chassis and mount key components, including the camera, microcontroller, and IMU. I also need to develop a more mature and finalized approach for motor mounting to ensure proper alignment, structural support, and ease of assembly.

In parallel, we aim to have a basic SLAM stack running, demonstrate wireless motor control from a laptop, and begin initial integration between the SLAM system and the navigation stack.