Mechatronic Design Individual Lab Report (ILR07)
Name: Hongfei
Team: Team 2
Teammates: Hongfei Liu, Hongru Liu, Daniel Lazaro, Yechen Zheng
ILR Number: ILR07
Submission Date: March. 23, 2026

Individual Progress

Due to unexpected shipping delays, the components required for fabricating the final single-leg prototype, originally expected to arrive last Monday, were only delivered this week. As a result, physical prototyping was postponed.

Instead, I focused on refining the CAD design of the leg assembly. Specifically, I finalized the placement of all six motors within the chassis and integrated appropriate motor mounting brackets along with right-angle support fixtures to ensure structural stability and ease of assembly.

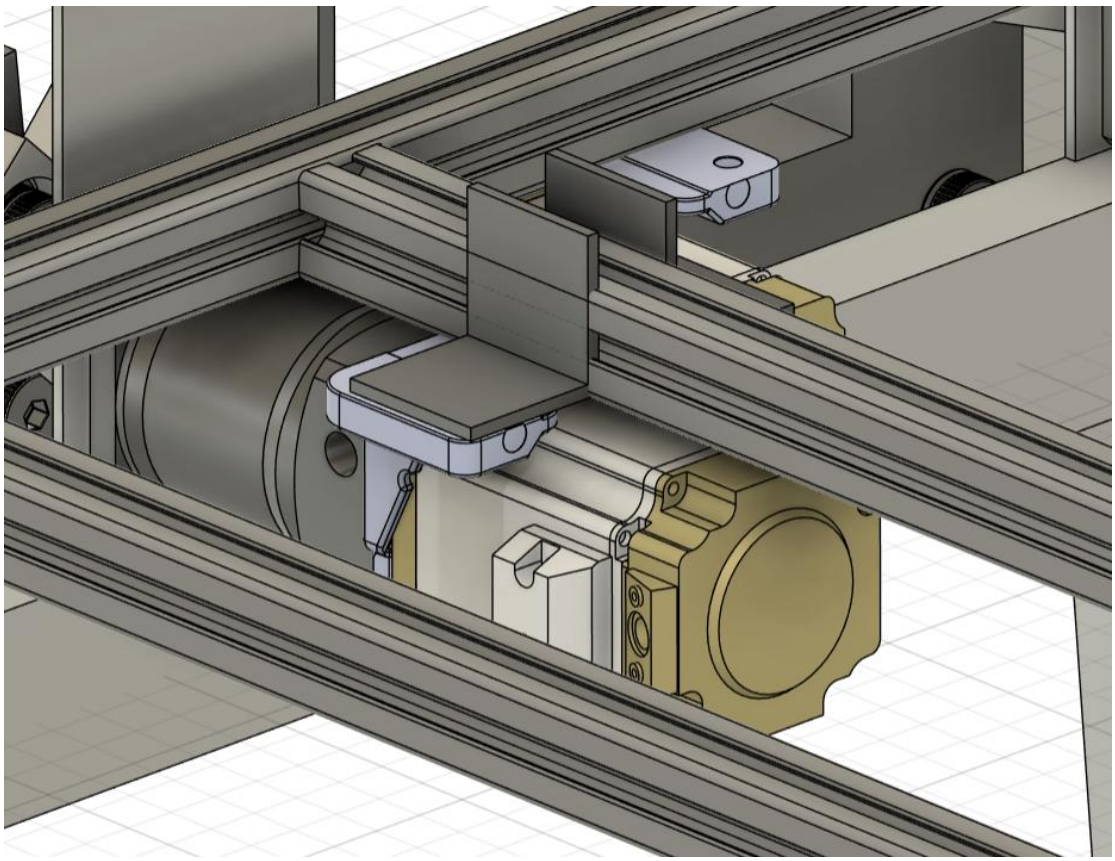

Figure 1. Motor installation using custom mounting bracket and right-angle support fixture integrated with the aluminum frame.

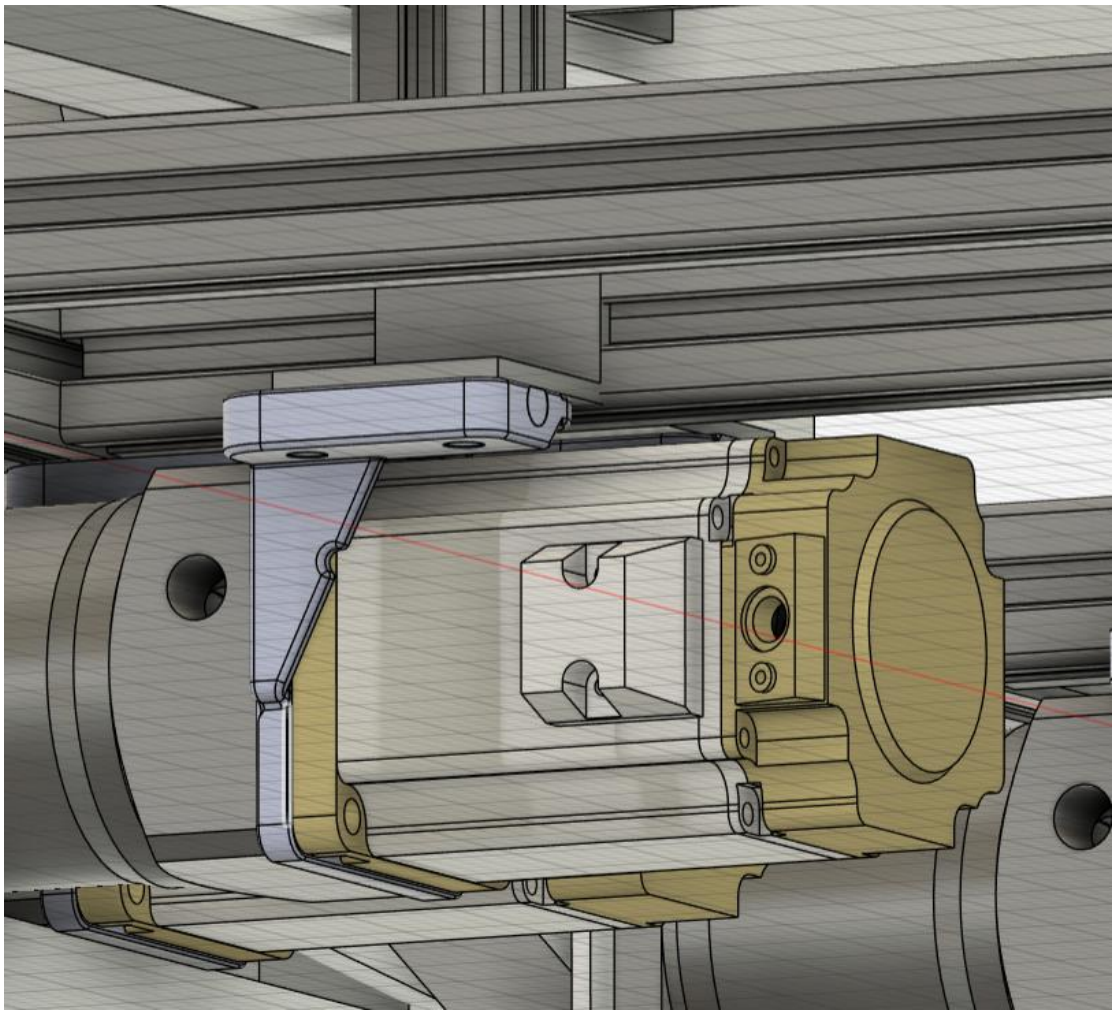

Figure 2. Side view of motor mounting assembly showing bracket reinforcement and alignment within the chassis.

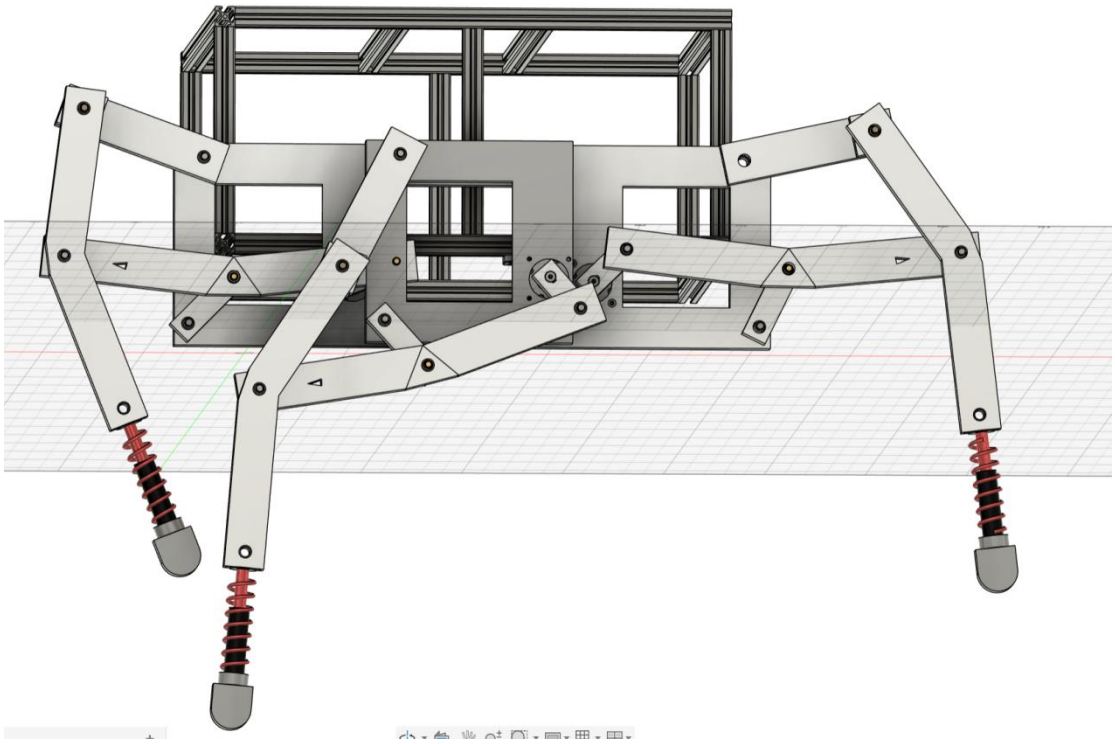

Figure 3. Updated leg linkage structure with improved geometry and integration with the frame.

In addition, I improved the leg linkage design to better match the frame geometry and increase structural robustness. The links near the frame were redesigned as solid components instead of hollow ones, and counterbored holes were introduced to recess screw heads. This allows the links to be positioned closer to the frame, improving compactness and reducing interference.

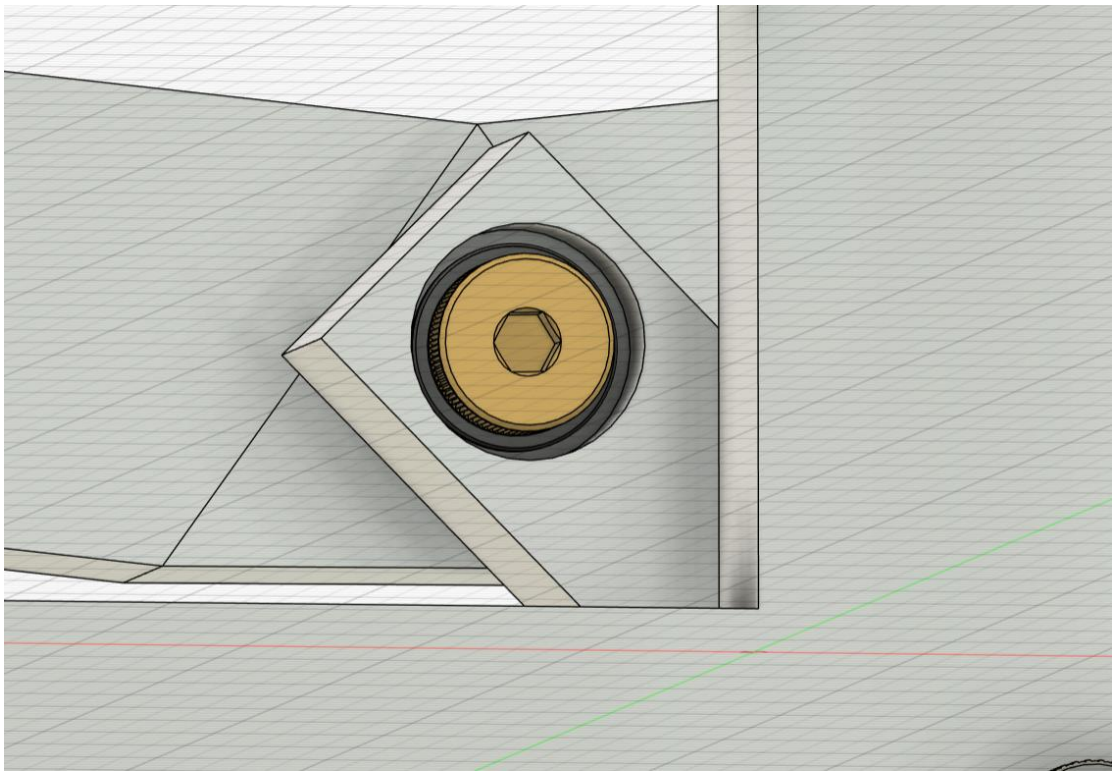

Figure 4. Counterbored hole design allowing screw heads to be recessed, enabling closer proximity between links and frame.

Furthermore, the joint mounting design was refined. Since the updated link geometry enables closer integration with the frame, the previously required sleeve spacers were eliminated. This simplification reduces part count and overall system cost while maintaining proper joint functionality.

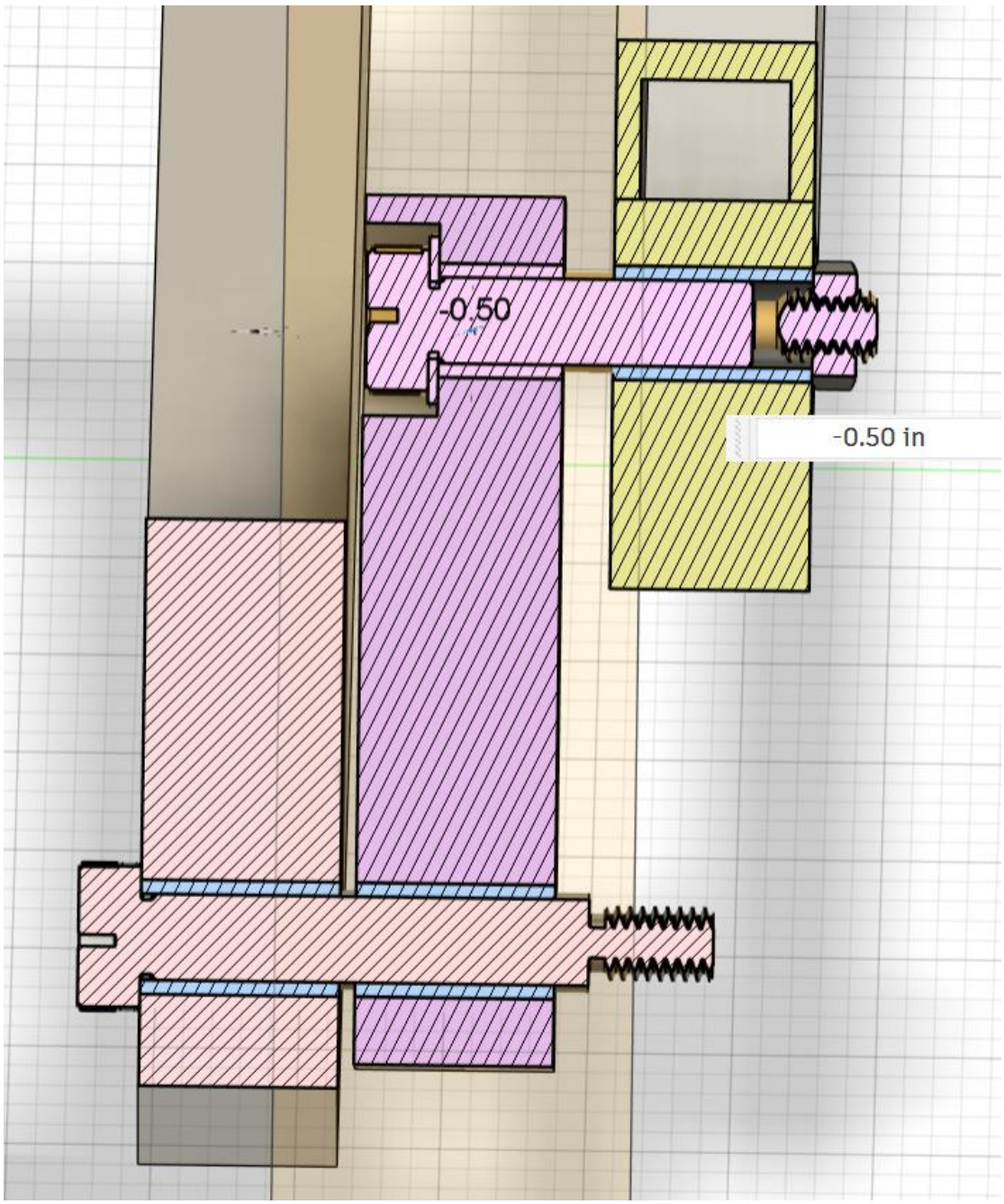

Figure 5. Refined joint mounting design eliminating sleeve spacers while maintaining proper alignment and constraint.

Challenge

A key challenge during this period was the delay in component delivery, which prevented the planned fabrication and testing of a full single-leg prototype. This limited our ability to validate the mechanical design under real-world loading conditions.

Additionally, redesigning the linkage to fit closer to the frame introduced constraints on fastener placement and joint alignment. Careful consideration was required to

avoid interference while ensuring sufficient structural strength and assembly feasibility.

Teamwork

Team progress during this period was partially impacted by delays in component delivery; however, meaningful progress was still made across both mechanical and software aspects of the system.

On the mechanical side, the chassis was physically assembled through collaborative efforts between myself, Yechen Zheng, and Hongru Liu. In parallel, we prepared for the fabrication of the single-leg prototype using final materials, although full assembly could not be completed due to the delayed arrival of key components.

On the software and systems side, Daniel Gonzalez Lazaro made significant progress by developing a near-complete circuit parts list and demonstrating ORB-SLAM2 with CUDA acceleration running over a wireless connection. This establishes a foundation for integrating perception and navigation capabilities into the system.

Overall, while hardware progress was temporarily constrained by logistics, parallel development in mechanical design and software ensured continued system-level advancement.

Plan

In the next phase, I will focus on completing the mechanical development and validation of the leg subsystem. Specifically, I will assemble the single-leg prototype using the newly arrived components and verify the fit and alignment of all joints and linkages.

I will also evaluate the effectiveness of the updated joint mounting design, particularly the removal of sleeve spacers, to ensure proper constraint and smooth motion. If necessary, adjustments will be made to improve assembly tolerance and mechanical reliability.

Additionally, I plan to integrate the motor mounting system with the leg assembly and conduct initial functional testing to validate structural integrity and basic motion performance.