Individual Lab Report (ILR05)

Motor Lab

Name: Hongru Liu

Team: Team 2

Andrew ID: hongrul

Teammates: Hongru; Yechen; Hongfei; Dan

Submission Date: [2026-03-09]

Individual Progress

My direct technical contribution during this period was limited, so I want to be honest about that. Rather than completing a major hardware or software task on my own, I used this cycle to follow the integration work closely so I could understand the current system state and prepare to contribute more effectively in the next iteration. I reviewed the controller GUI demo, the ROS2 touch-sensor display workflow, the closed-loop MuJoCo simulation progress, and the updated CAD legs with springs.

The most concrete artifact I worked from was the current CAD assembly shown in Figure 1. Studying this model helped me understand the updated mechanical layout, especially the relationship between the upper frame, the center gear train, the side leg linkage, the spring-loaded feet, and the wheel modules. Even though I did not personally finish one major subsystem this round, I used this review process to build a clearer understanding of the platform so I can contribute more effectively in the next phase.

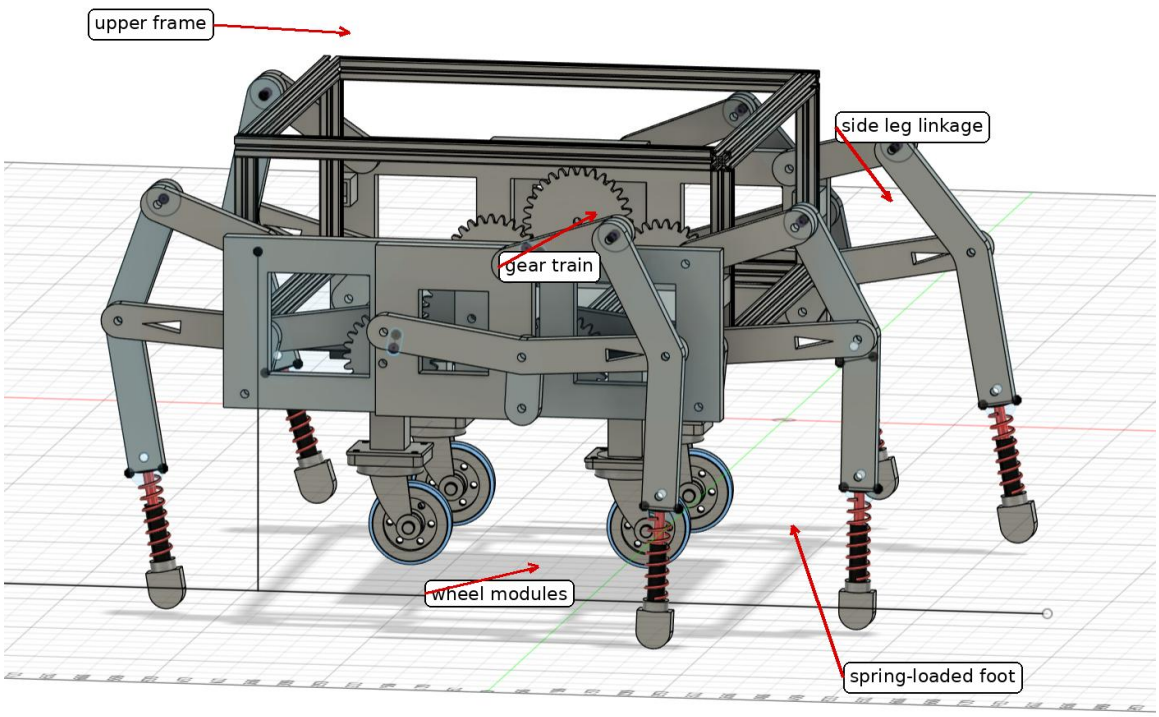

Figure 1. Annotated CAD view of the current robot assembly, highlighting the upper frame, gear train, side leg linkage, wheel modules, and spring-loaded feet.

Challenges

My biggest challenge during this period was timing and availability. Since it was spring break, I was away from campus and did not have access to the team's physical setup, lab space, or

hardware resources. Because of that, I was not in a good position to contribute to hands-on testing, integration, or in-person debugging during this stage of the project.

Another challenge was that several of the team's main tasks this week were closely tied to specific machines, simulation environments, and hardware access. For example, part of the controller demo had to be recorded from a personal PC, and other progress depended on access to the available setup and software environment. Since I was away and had limited time during break, it was harder for me to directly participate in those parts. Moving forward, I think it would help if the team keeps clearer notes, recordings, and setup documentation so that absent members can still follow progress and contribute more effectively.

Teamwork

The team made good progress in several areas this week. Dan prepared the controller GUI demo, recorded it from a personal PC, and improved the touch sensor demo with debug displays and a cleaner appearance in ROS2. The simulation work also moved forward to a successful closed-loop kinematic simulation of six legs in MuJoCo, with basic joint-velocity control and an early draft of CPG-style control for better body stability. On the mechanical side, the CAD was updated by Hongfei and Zheng with spring-assisted legs, as shown in Figure 1.

Since I was away during spring break, I was not able to contribute in person to the hardware or testing work. Even so, I stayed updated on the team's progress and kept track of how the GUI, sensing, simulation, and mechanical design were coming together. This helped me understand the current system state better and see where I can contribute more directly in the next stage.

Plans

Before the next demo, I plan to take on more direct technical work in simulation, hardware selection, and assembly. My first goal is to use the simulation results to better measure or estimate the torque requirements of the system, since that will help us understand what motor performance is actually needed for the robot.

I also plan to help evaluate and select a new motor, because the previous option ended up over budget once tariffs were included in the total cost. In parallel, I want to help assemble the robot frame so the team can make progress on the physical platform while we continue refining the design. These tasks will let me contribute more directly to both the analysis and the hardware side of the project.