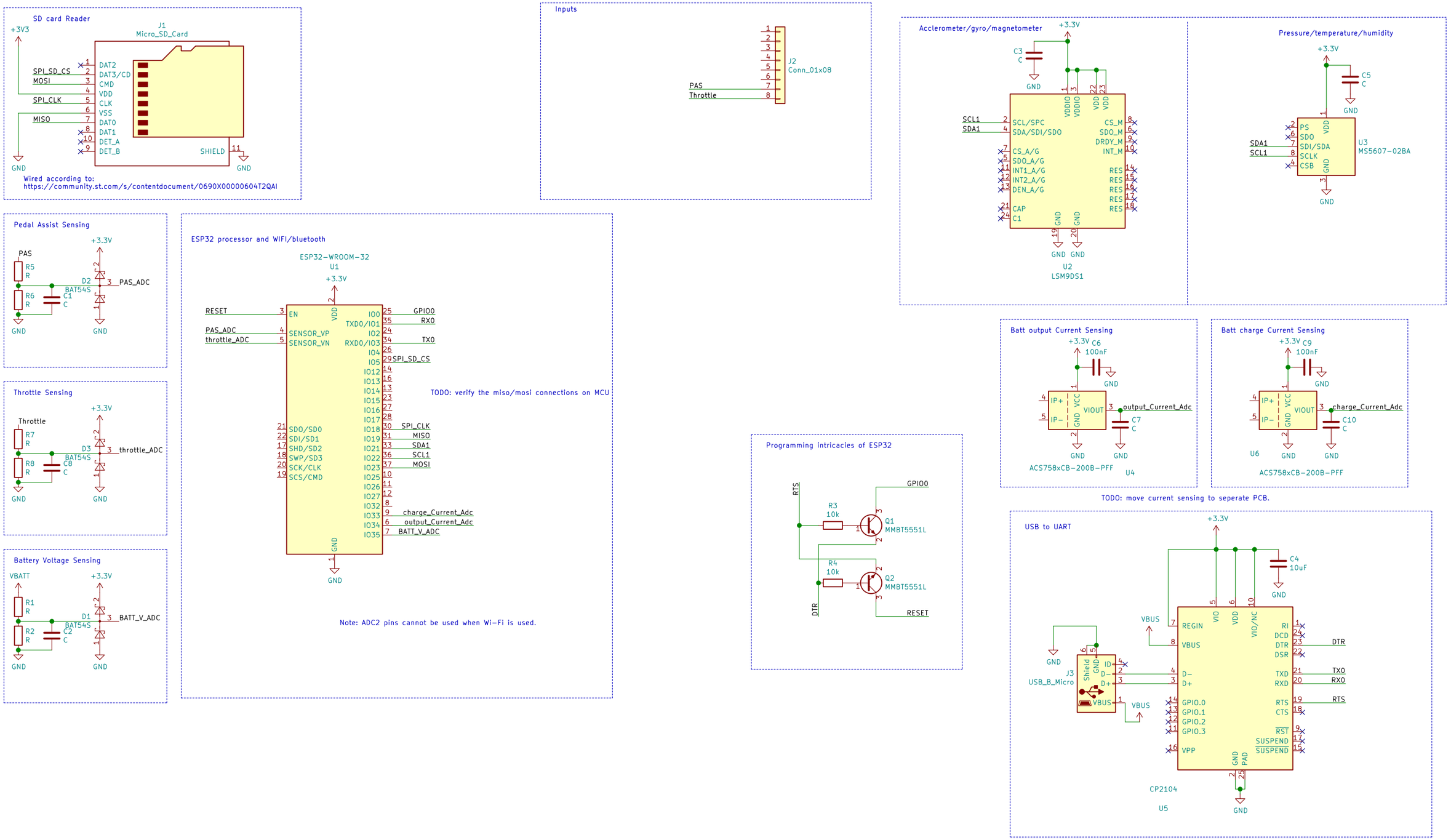

Based on design: https://www.pedelecforum.de/wiki/doku.php?id=elektrotechnik:forumscontroller
Ref: https://randomnerdtutorials.com/esp32-adc-analog-read-arduino-ide/

Sheet: /
File: pcb.sch

Title: Design of E bike datalogger

Size: A3	Date: 2021-01-21	Rev: v0.1
KiCad E.D.A. kicad (5.1.2)-1		Id: 1/1