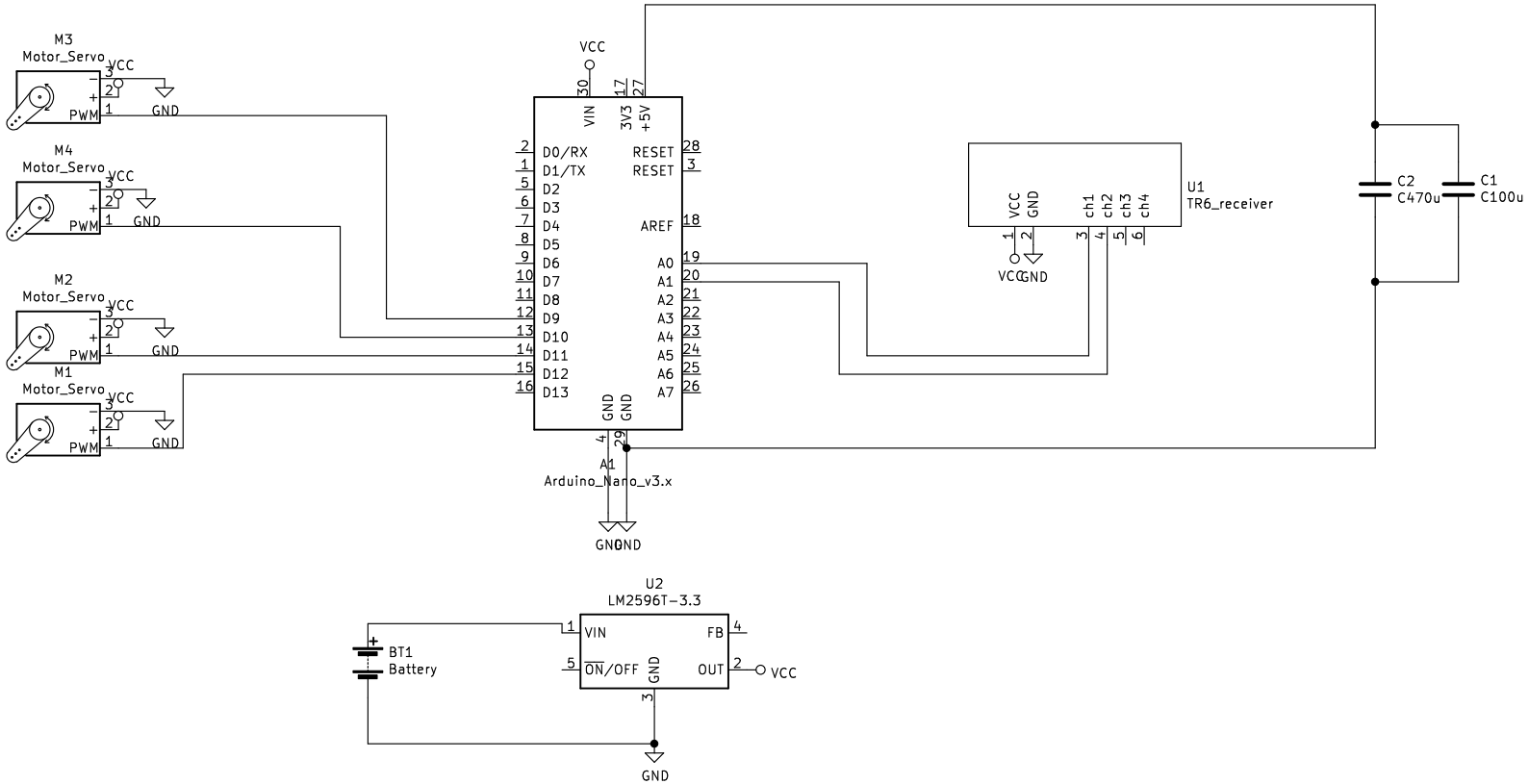

Input voltage from the batttery is 11.1 V
VCC is 6V
Added the additional capacitor

Sheet: /
File: Kicad diagrams.sch

Title: Electrical design for the Mechanical duck

Size: A4	Date: 2019-03-04	**Rev: V3**
KiCad E.D.A. kicad (5.0.0)		Id: 1/1