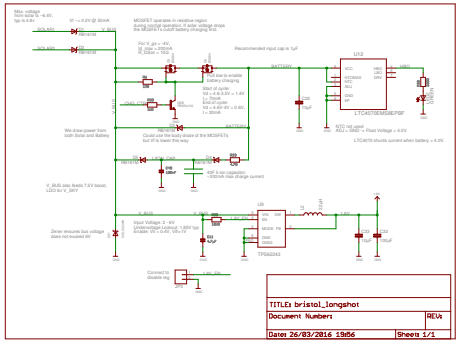
TITLE: bristol_longshot
Document Number:
REV:
Date: 26/03/2016 19:56
Sheet: 1/1

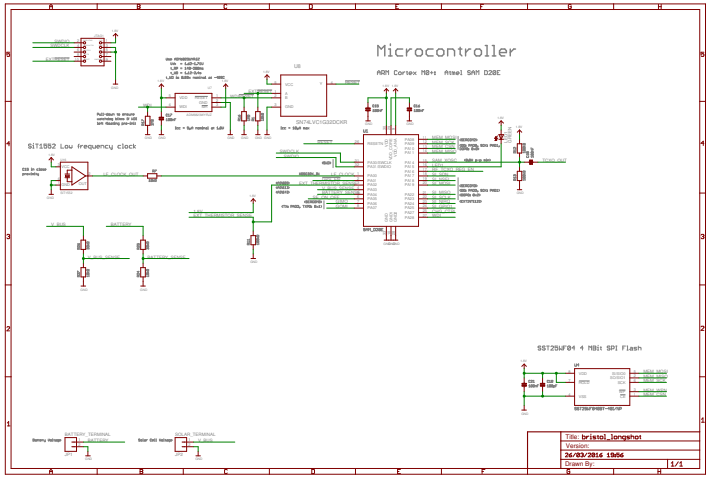
Microcontroller
ARM Cortex M0+ Atmel SAM D20E
SiT1552 Low frequency clock
SST25WF04 4 Mbit SPI Flash
Title: bristol_longshot
Variation:
26/03/2016 19:56
Drawn By:
1/1

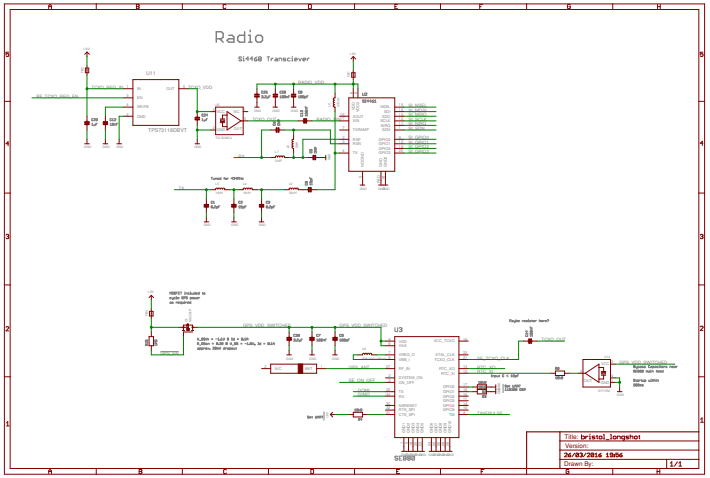
Radio
Si4468 Transciever
Title: bristol_longshot
Variation:
26/03/2016 19:56
Drawn By:
1/1

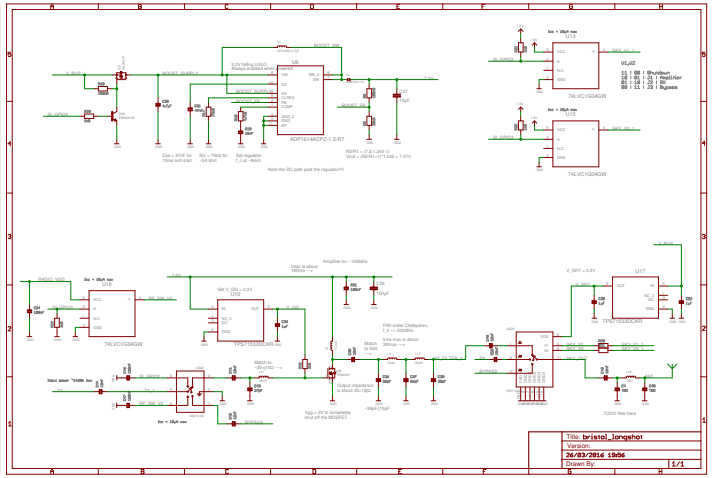
Title: bristol_longshot
Variation:
26/03/2016 19:56
Drawn By:
1/1