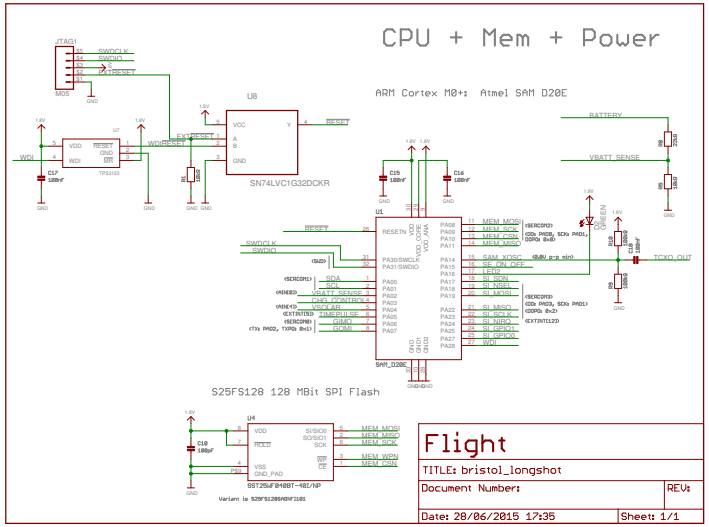
CPU + Mem + Power
ARM Cortex M0+: Atmel SAM D20E
SN74LVC1G32DCKR
S25FS128 128 MBit SPI Flash
Flight
TITLE: bristol_longshot
Document Number:
REV:
Date: 28/06/2015 17:35
Sheet: 1/1

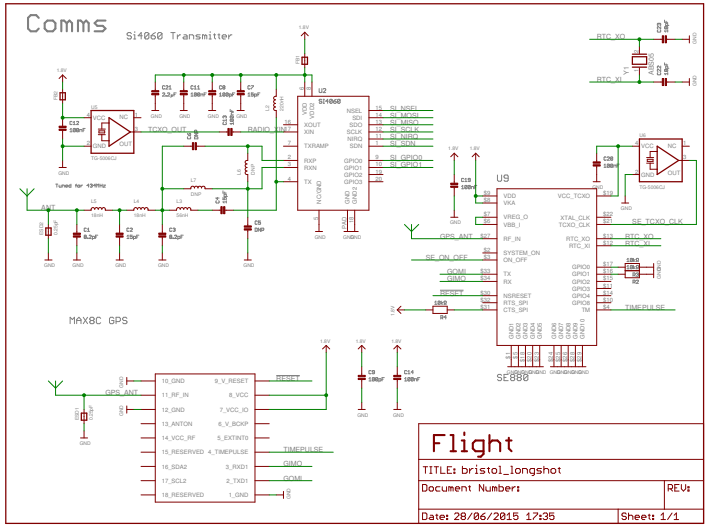
Comms
Si4060 Transmitter
MAX8C GPS
SE880
Flight
TITLE: bristol_longshot
Document Number:
REV:
Date: 28/06/2015 17:35
Sheet: 1/1

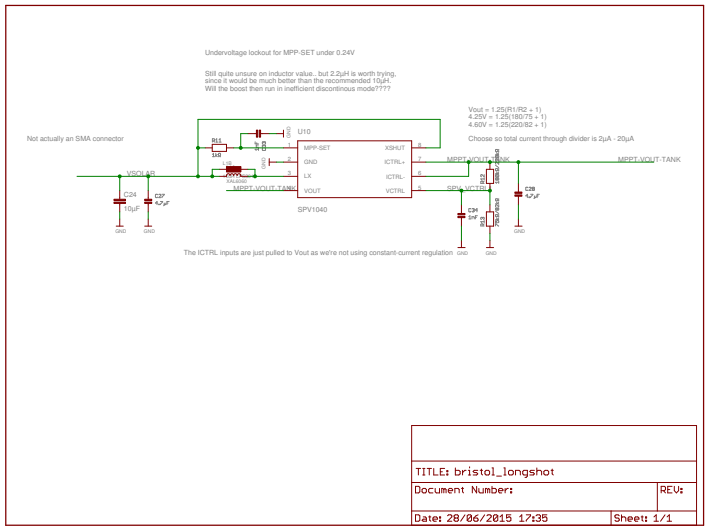
Undervoltage lockout for MPP-SET under 0.24V
Still quite unsure on inductor value.. but 2.2µH is worth trying, since it would be much better than the recommended 10µH.
Will the boost then run in inefficient discontinous mode????
Vout = 1.25(R1/R2 + 1)
4.25V = 1.25(180/75 + 1)
4.60V = 1.25(220/82 + 1)
Choose so total current through divider is 2µA - 20µA
Not actually an SMA connector
SPV1040
The ICTRL inputs are just pulled to Vout as we're not using constant-current regulation
TITLE: bristol_longshot
Document Number:
REV:
Date: 28/06/2015 17:35
Sheet: 1/1

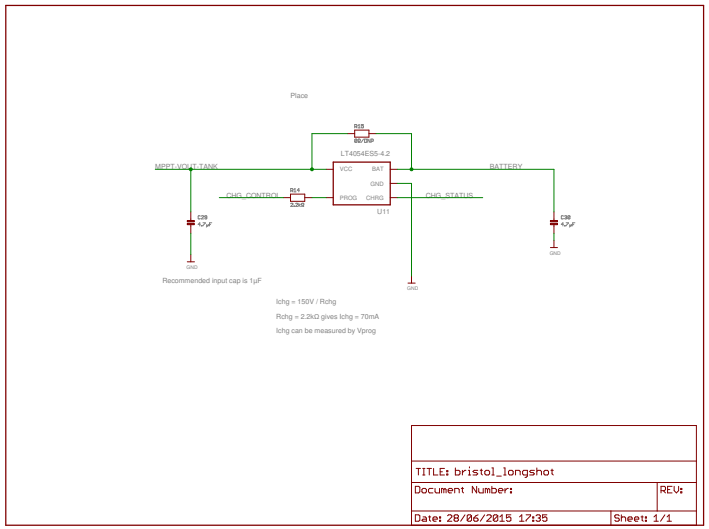
Place
LT4054ES5-4.2
Recommended input cap is 1µF
Ichg = 150V / Rchg
Rchg = 2.2kΩ gives Ichg = 70mA
Ichg can be measured by Vprog
TITLE: bristol_longshot
Document Number:
REV:
Date: 28/06/2015 17:35
Sheet: 1/1

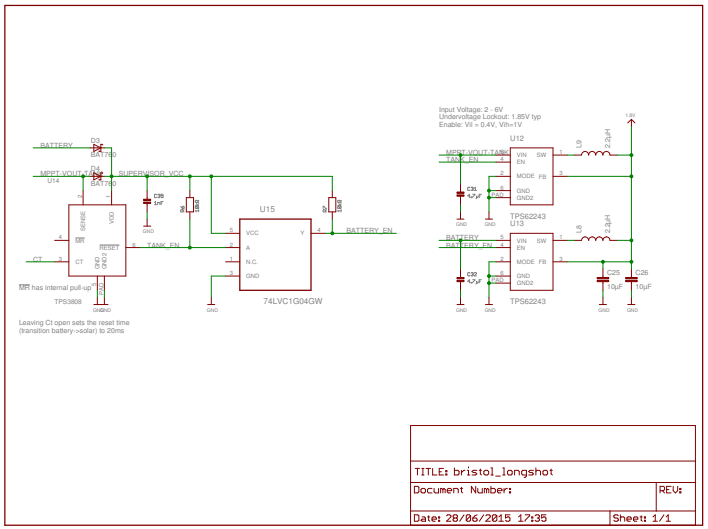
Input Voltage: 2 - 6V
Undervoltage Lockout: 1.85V typ
Enable: Vil = 0.4V, Vih=1V
TPS3808
74LVC1G04GW
TPS62243
Leaving Ct open sets the reset time (transition battery->solar) to 20ms
TITLE: bristol_longshot
Document Number:
REV:
Date: 28/06/2015 17:35
Sheet: 1/1