Warsaw University of Technology
Faculty of Mathematics
and Information Science

Master's diploma thesis

in the field of study Computer Science and Information Systems
and specialisation Artificial Intelligence

Multi-model LLM system with dynamic planning and model selection optimization

Jakub Knyspel

student record book number 313282

thesis supervisor
dr hab. Maria Ganzha, prof. nzw.

WARSAW 2026

Abstract

Multi-model LLM system with dynamic planning and model selection optimization

TODO

Keywords: TODO, ...

Streszczenie

Implementacja wielomodelowego systemu LLM z dynamicznym planowaniem i optymalizacją doboru modeli

TODO

Słowa kluczowe: TODO, ...

Contents

1. Introduction **11**

2. Related Work **12**

2.1. RouteLLM 12

2.2. RoRF - Routing over Random Forests 12

3. System Requirements & Constraints **13**

4. Description of the System **14**

5. Scoring **15**

5.1. Dataset Selection 15

5.2. Preprocessing & Feature Selection 16

5.2.1. Complexity Features 16

5.2.2. Domain Scores 17

5.2.3. Style Features 18

5.2.4. Task Type Features 18

5.3. Data Analysis & Transformations 19

5.4. Prompt-invariant Scoring 19

5.4.1. Iterative Models 20

5.4.2. Non-iterative Models 20

5.5. LLM Embedding 21

5.5.1. Metrics 22

5.5.2. Features 22

5.5.3. DNN-based Embedding 23

5.5.4. Tuning-based Embedding 23

5.5.5. Attention Embedding 23

5.5.6. Prompt-invariant Embedding-based Models 24

5.6. Simple Models 25

5.6.1. Gradient Boosting Model 25

5.6.2. DNN Model 26

5.7. Complex Models . . . 27
5.7.1. Transformer Model . . . 27
5.7.2. Response Predictive Model . . . 30
5.7.3. Multistage Models . . . 32
6. Response Length Prediction . . . 34
6.1. Input and Output Data . . . 34
6.2. Models . . . 34
6.2.1. Gradient Boosting Model . . . 34
6.2.2. DNN Model . . . 34
7. Analysis of the Solution . . . 35
8. Conclusion . . . 36

1. Introduction

TODO

2. Related Work

2.1. RouteLLM

TODO

2.2. RoRF - Routing over Random Forests

TODO

TODO: More references

3. System Requirements & Constraints

TODO: What did I decide to do? What constraints did I settle on?

4. Description of the System

TODO: Description of system components, communication, etc. TODO: Also include model selection based on price and score.

5. Scoring

TODO

5.1. Dataset Selection

The title of the most popular human-evaluated LLM preference dataset without a doubt belongs to *Chatbot Arena Conversations* [TODO: ref]. It is used as primary human-evaluated dataset in referenced works [TODO: verify and ref].

Chatbot Arena Conversations data consists of a pair of responses from different LLM models to a single user prompt, along with a comparison label, determining which model's answer is considered better by the user. When comparison is unclear, the label can also indicate that both responses were sufficient for a given query, or that neither model managed to produce a good answer. Selection of LLMs is sufficiently wide for a model to learn a broad spectrum of differences between different LLM models, while prompts span a variety of topics.

However, there is a crucial issue: published in 2022 [TODO: verify], *Chatbot Arena Conversations* dataset only includes comparisons between rather old LLM models. This isn't a disqualifying problem, as my work doesn't focus on particular LLM models. Though, A decision to use this dataset would require two important implications: that human preference during evaluation of a pair of responses remains unchanged, and that the general distribution of responses produced by LLMs is similar.

It's hard to evaluate how close to the truth the first assumption is. While human preferences likely did not change drastically over the last four years, expectations of what LLMs should be able to do did undergo an undeniable change, simply due to their capabilities increasing. Another significant difference may be caused by a wider adoption - people whose responses were used in *Chatbot Arena Conversations* dataset belonged to a significantly narrower group of "early adopters" of LLM technology, compared to a group of LLM users today.

These reasons prompted me to decide to rely on a newer alternative to *Chatbot Arena Conversations* dataset. Collected and released by the same organization (*LMSYS* [TODO: ref]),

LMArena Human Preference is a successor of aforementioned dataset. It's structure closely resembled *Chatbot Arena Conversations*, also including human comparison results over a pair of LLM responses to the same prompt. Additionally, the dataset includes a range of common prompt labels [TODO: describe], which can be used as additional features in any prediction task. *LMArena Human Preference* is also an improvement in terms of size. It contains around 140 thousand comparison pairs (compared to *Chatbot Arena Conversations*'s 33 thousand), and includes responses from 53 different models (compared to *Chatbot Arena Conversations*'s 20).

It's important to note that due to a very similar structure, these datasets can be used interchangeably. Due to previously mentioned reasons, mainly *LMArena Human Preference* was used for model training and evaluation throughout this work. However, comparisons between datasets are made where relevant, highlighting important differences between their data.

5.2. Preprocessing & Feature Selection

Intuitively, when it comes to inferring the quality of LLM's response to a given input, the most important aspect of that prompt should be it's semantic meaning - ideally, prompts that are equivalent when it comes to meaning, differing only in wording, should produce the same answer. Semantic meaning of a given text can be captured via a range of specialized text embedding models, which, given an input, return a vector that should be useful for a range of classification or regression tasks. [TODO: references, examples]. As such, prompt embedding vectors are a primary candidate for model input features.

In practice, assumption that prompt features which are unrelated to it's meaning shouldn't influence LLM output isn't reasonable. LLMs in they current state are far from ideal, so certain biases and simple relationships cannot be ruled out. Thus, instead of relying solely on prompt embedding vectors, input features also contain a set of supporting values that represent certain characteristics of submitted question.

Aside from prompt embedding vectors, the following simple features were used:

5.2.1. Complexity Features

8 features encoding prompt complexity were defined:

- **Character count**;
- **Word count**;
- **Sentence count**;

- **Average word length**;
- **Question density** - Number of question marks in the prompt, divided by prompt length;
- **Nesting density** - Number of parentheses, divided by prompt length;
- **Multi-part indicator density** - Number of words indicating multiple aspects/parts in the prompt ("and", "also", etc.), divided by prompt length;
- **Inverse vocabulary richness ratio** - $1 - \frac{[\text{number of unique words}]}{[\text{word count}]}$.

Features that don't directly encode prompt length were normalized by that length, in order to reduce dependency between them - for example, it's reasonable to assume that longer prompts will, on average, contain more parentheses and question marks than shorter prompts.

Vocabulary richness ratio was inverted by subtracting it's value from 1. This transformation was performed to make value distribution more similar to other features, which made it possible to unify it's further processing with other features [TODO: ref]. In an overwhelming majority of samples, nearly all words are different, causing vocabulary richness ratio to primarily take a value of 1 (or close to it). "Inverting" values causes them to instead be 0 (or close to it).

5.2.2. Domain Scores

12 features describing prompt domain were defined:

- **Science**;
- **Medicine**;
- **Law**;
- **Finance**;
- **Tech**;
- **Academic**;
- **Casual**;
- **Formal**;
- **Philosophical**;
- **Historical**;
- **Personal**;

- **Business**;

Each domain score was defined as a ratio of words related to that domain, to total word count of the prompt.

5.2.3. Style Features

6 style features were defined:

- **Informal marker density** - Number of informal style indicators (like "btw", "tbh", etc.), divided by prompt length;
- **Specificity marker density** - Number of words indicating constraints and requirements (like "exactly", "must", etc.), divided by prompt length;
- **Politeness marker density** - Number of words indicating polite tone (like "please"), divided by prompt length;
- **Urgency marker density** - Number of words indicating urgency (like "quickly", "fast", etc.), divided by prompt length;
- **Starts with verb** - Boolean feature indicating that first word of the prompt is a verb;
- **Is a question** - Boolean feature indicating that the prompt ends with a question mark;

5.2.4. Task Type Features

10 boolean features defining type of the task given by a prompt were defined:

- **Expects code** - Whether prompt contains words indicating that code should be returned;
- **Contains code** - Whether prompt contains code blocks;
- **Expects math** - Whether prompt contains words indicating that some mathematical calculation should be performed;
- **Contains numbers** - Whether prompt contains numbers;
- **Contains math symbols** - Whether prompt contains common math symbols (i.e. equality symbol);
- TODO: Continue

TODO: List remaining features

5.3. Data Analysis & Transformations

Feature transformations were defined based on their value distributions. Two kinds of transformations were defined for numeric data, described further in this section. Aside from these transformations, all numeric features were scaled to mean 0 and standard deviation equal to 1.

First, certain features show exponential behavior. Features related to prompt length are a perfect example of that [TODO: ref some plot]. Those features were transformed using a logarithm [TODO: reword] to achieve a more uniform value distribution. Small values are clipped to 10^{-6} to prevent them from exploding to $-\infty$.

Second, certain numeric features are dominated by zero values. Domain scores are a good example. Most prompts don't refer to anything related to finance. While distinguishing between prompts where financial language dominates from prompts that contain a handful of financial terms might be significant, simply transforming the data via a logarithm causes prompts without financial language to have scores which are similar to prompts containing only a few phrases related to finance, making those two cases hard to distinguish. Additionally, zero value dominance will negatively impact scaling. To address these issues, the transformation described by equation [TODO: ref] was introduced. Additionally, to address the scaling issue, zero values were excluded from scaling - mean and standard deviation necessary for scaling was computed from remaining values.

TODO: equation

Transformation is applied after scaling. Softplus operation transforms non-zero data from $(-\infty, \infty)$ range onto $(0, \infty)$, while keeping the monotonicity [TODO: beter word] relatively unchanged. To ensure a clear separation between zero and small but nonzero samples, zero values are encoded as -1.

[TODO: plots for each feature + chosen transforms]

5.4. Prompt-invariant Scoring

A natural simplification of prompt routing problem comes from an assumption that LLM performance does not depend on the prompt. In this case, every LLM has a single score associated with them, and the problem reduces to assigning those scores based on comparison data. While this simplification makes the problem much less interesting and complex, it is more commonly used when ranking LLMs, due to capturing a general LLM quality rather than focusing on particular cases [TODO: examples, refs]. Also, exploration of this problem will serve as a good

baseline for prompt-aware scoring.

5.4.1. Iterative Models

TODO (do I need this section?)

5.4.2. Non-iterative Models

The problem of scoring entries based on comparison data can be expressed more rigorously, turning it into an optimization problem with well-defined fitness metric. Some such expressions have easily computable optimal solution.

L1 Criterion

The most natural way of expressing quality of score assignment is via accuracy - a percentage of comparisons where winning entry was assigned a higher score than the losing one. This is equivalent to minimizing the number of *upsets* (comparisons such that entry A wins against entry B, but A was assigned a lower score than B). This criterion turns out to be NP-hard [TODO: ref]. However, if we take into account the magnitude of upsets (difference between scores assigned to A and B), the problem becomes solvable in polynomial time. Minimizing the sum of magnitudes can be expressed as a linear programming problem (v_a represents the score assigned to entry A, and ϵ is added to prevent trivial solution of all scores being 0):

$$\begin{aligned} \text{minimize} \quad & \sum s_i \\ \text{subject to} \quad & v_a - v_b + s_i \geq \epsilon \\ \text{for} \quad & a > b \quad \text{in comparison set} \end{aligned}$$

This criterion can be equivalently formulated via a min-cost-max-flow problem.

1. Each node (except source and sink) represents an entry;
2. A comparison in which A wins against B is expressed as an edge from node A to node B, of capacity 1 and cost 1;
3. There's an edge from source to each node, with cost 0 and capacity equal to it's number of wins;
4. There's an edge from each node to sink, with cost 0 and capacity equal to it's number of losses.

Then, node potentials can be interpreted entry scores.

[TODO: results]

The solution to min-cost-max-flow problem also gives us an additional useful metric: percentage of "meaningful" comparisons in the comparison set. Any cycle in the network has positive cost (since all edges that don't include source and sink have positive cost), so optimal flow won't use them. Using that information, we can compute the ratio of used comparison edges (equal to total cost) to all comparisons. This quantity can be interpreted as decisiveness of comparison set - since comparison cycles can't be scored correctly, the more common they are, the less correct is it to represent LLM quality via a single, prompt-independent score.

L2 Criterion

Minimizing squares of upset magnitudes turns out to be even simpler - it is a variation of "least squares" problem. As such, this approach was chosen.

[TODO: results]

Turns out that this criterion results in a significantly better accuracy than linear one. As such, it's accuracy will be used as baseline for other models.

5.5. LLM Embedding

LLM ecosystem is constantly evolving, with new models being introduced often. While dataset selection was made with that in mind, and chosen dataset contains comparisons of LLMs that are quite new at the time of writing, constraining scoring models to only work with LLMs featured in a comparison dataset doesn't seem like a practical decision. Such datasets rely on human evaluation, and aren't easy to prepare.

An extensible alternative to scoring only LLMs whose comparison data is available, is to compute an embedding vector representing each model, and use that instead of LLM ID as scoring input data. Such embeddings can be computed without relying on comparison data, making the model easily extensible. In particular, embeddings can be computed from a set of prompts and LLM responses to them. This information is much easier to gather than human evaluations, and can be collected automatically.

An argument can be made that prompts and responses represent all information required for scoring. This way of specifying the problem transforms it into a set embedding problem: given a set of samples, define an embedding function that satisfies some requirements, while being invariant to sample ordering. Many solutions to this problem have been developed and

discussed. One such solution is described by Zaheer et. al. in *DeepSets* paper [2]. It shows that such set embedding function can be defined as a function of a mean of sample embeddings (equation 5.1). P_{out} represents final output transformation, while E_s is a sample embedding function.

$$E(S) = P_{out}(\frac{1}{|S|}\sum_{x \in S} E_s(x)) \tag{5.1}$$

This specification of the problem has an important, additional benefit. Comparisons dataset which was selected contains prompts and responses from 50 distinct LLMs. Original formulation of the problem, which focuses on assigning a single embedding vector to each LLM, only ever produces 50 different embedding values, which severely limits the dimensionality of embedding vectors before the problem becomes underspecified. By viewing LLM characteristics as only defined by responses they produce to given prompts, we can instead focus on computing embedding vectors for each prompt and response pair, raising the number of computed embedding values to 140k.

5.5.1. Metrics

Embeddings will be used by scoring models to distinguish between LLMs, and subsequently be able to determine certain characteristics of their response patterns. This means that the most important quality of LLM embeddings is distinguishability - given a subset of prompt and response pairs form a single LLM, we should be able to tell which LLM it was produced by. Rigorously, we can define an accuracy metric as follows:

TODO: equation

TODO: Other metrics?

5.5.2. Features

As described in section 5.2, text embedding vectors are used as input features. As LLM embeddings are computed from both prompts and responses, text embedding vectors of both are included in input data. Additionally, certain handcrafted response features are also included. As prompts are of secondary importance scalar prompt features described in section 5.2 were not used.

[TODO: list features]

5.5.3. DNN-based Embedding

The simplest implementation of embedding model is simply a multi-layer perceptron. *LeakyReLU* activation function was used, and dropout layers were introduced to prevent overfitting. Hidden layer sizes (and their number) are configurable.

Model was trained using triplet margin loss, given by formula [TODO: ref]. Training sample features three prompt and response pairs: anchor, positive, and negative. Positive pair is produced by the same LLM as anchor, while negative pair is produced by a different LLM. Loss criterion encourages the model to produce embeddings such that the distance between anchor and positive embeddings is smaller than between anchor and negative (plus a margin).

Additionally, KL loss was introduced to encourage a sample embeddings to follow a normal distribution.

[TODO: results]

5.5.4. Tuning-based Embedding

Text embedding vectors used by DNN embedding model are generated using a pre-trained, frozen transformer model. It can be improved by unfreezing model weights, and tuning them during training.

Tuning-based embedding model does just that. For efficiency, only last two layers of the model were unfrozen. To ensure that embedding dimension is configurable and does not depend on the choice of transformer model, projection layer was added. The same loss criterion was used as in previous approach - triplet margin and KL loss.

[TODO: It might be a good idea to improve impl there - scoring transformer does things better]

[TODO: results]

5.5.5. Attention Embedding

Set embedding problem is quite common in machine learning, and as such, a number of solutions were proposed over the years. The general idea presented in the preamble of section 5.5, defining LLM embedding as a mean of embeddings of their outputs, is loosely inspired by Zaheer et. al. *DeepSets* paper [2]. While well received and widely cited, alternatives and extending works exist. One such work is Lee et. al. *Set Transformer* paper [1]. It challenges an implicit assumption that importance of all set elements is equal. The paper proposes a relatively simple alternative to taking a mean of sample representations - attention mechanism. The rationale behind that change is that certain samples provide a much clearer information about the set

than others - capturing behaviors or characteristics that highlight differences between a given set and the rest.

Attention embedding model implements that idea. The model consists of two modules: pair encoder (illustrated by figure 5.1) and set aggregator (shown on figure 5.2). Pair encoder takes prompt and response embeddings together with scalar features as inputs, projects each into a vector of configurable dimensionality, enriches these projections with interaction features (difference between prompt and response embeddings, and their element-wise product), then runs these features through a multi-layer perceptron to produce an embedding vector.

The model can be described by equation 5.2. E_s is the sample embedding function, P_{out} - final projection module, K - key projection (linear), V - value projection (linear), and Q - query vectors (trainable parameters).

$$E(S) = P_{out}(Attention(E_s(S))) \tag{5.2}$$

$$Attention(X) = softmax(\frac{QK^T(X)}{\sqrt{dim(Q)}})V(X) \tag{5.3}$$

Set aggregator module uses sample embeddings produced by pair encoder, outputting a single LLM embedding vector. In previous embedding models, this step was done by a simple mean computation, instead. Set aggregator uses attention mechanism. Pair embeddings are used to produce key (K) and value (V) vectors through learnable linear projections. Then, attention masks are computed by a configurable number of attention heads. This mask is then used to produce a single LLM embedding from value vectors produced from pair embeddings.

The model is trained using a supervised contrastive loss. In each batch, multiple embeddings are computed for each model, using different subsets of samples. Loss criterion encourages representations of the same model to be closer to each other than to all other representations. This directly represents the distinguishability requirement - embeddings produced by different subsets of samples from the same LLM should be different than embeddings of other LLMs.

[TODO: formulas]

[TODO: results]

5.5.6. Prompt-invariant Embedding-based Models

While distinguishability metric should closely correlate with LLM embedding usefulness, it can be validated by implementing a prompt-invariant scoring model which uses LLM embeddings instead of IDs, contrary to models described in section 5.4. If LLM embeddings are good enough, any iterative model should easily be able to reach similar accuracy to optimal one achieved by "least squares" model.

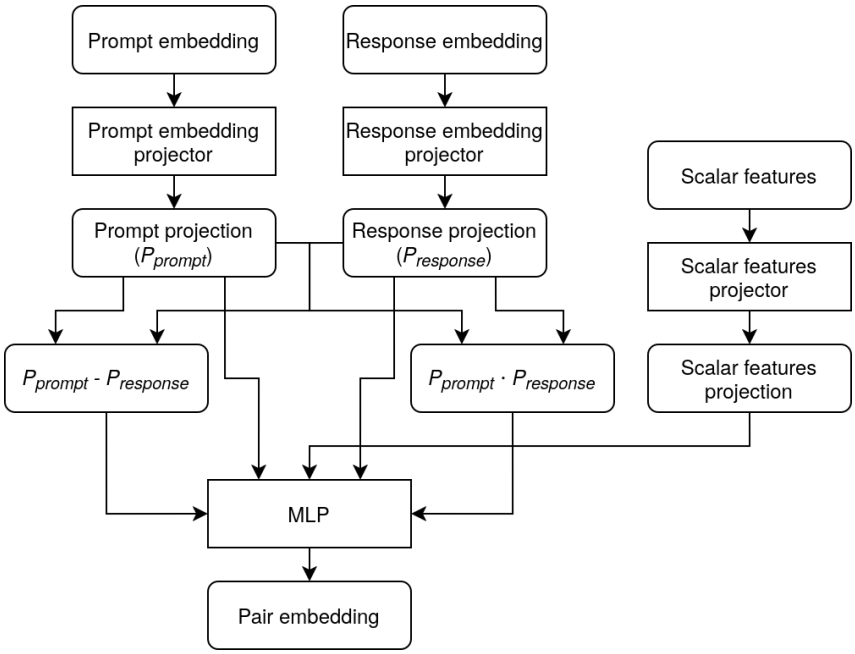

Figure 5.1: Attention embedding model - pair encoder module

To validate that hypothesis, gradient boosting model was implemented. The model was trained using margin ranking loss.

[TODO: results]

5.6. Simple Models

5.6.1. Gradient Boosting Model

[TODO: What is gradient boosting?]

Gradient boosting models are a common first choice when developing a machine learning solution for regression and classification problems. They are usually quick to learn various simple and intermediate patterns from the data. [TODO: verify] Additionally, their structure makes them relatively interpretable (especially in comparison to various neural network-based models) - as gradient boosting model is simply an ensemble of decision trees, nodes of these trees can be analyzed to find certain patterns about input to output relationships.

Instead of implementing a separate, prompt-aware gradient boosting model, implementation described in section 5.5.6 was extended, making input data used for scoring configurable. Based on configuration, in addition to LLM embeddings model can rely on prompt embedding vectors, as well as scalar prompt features.

To match the interface of other models described further in this section, whose training process

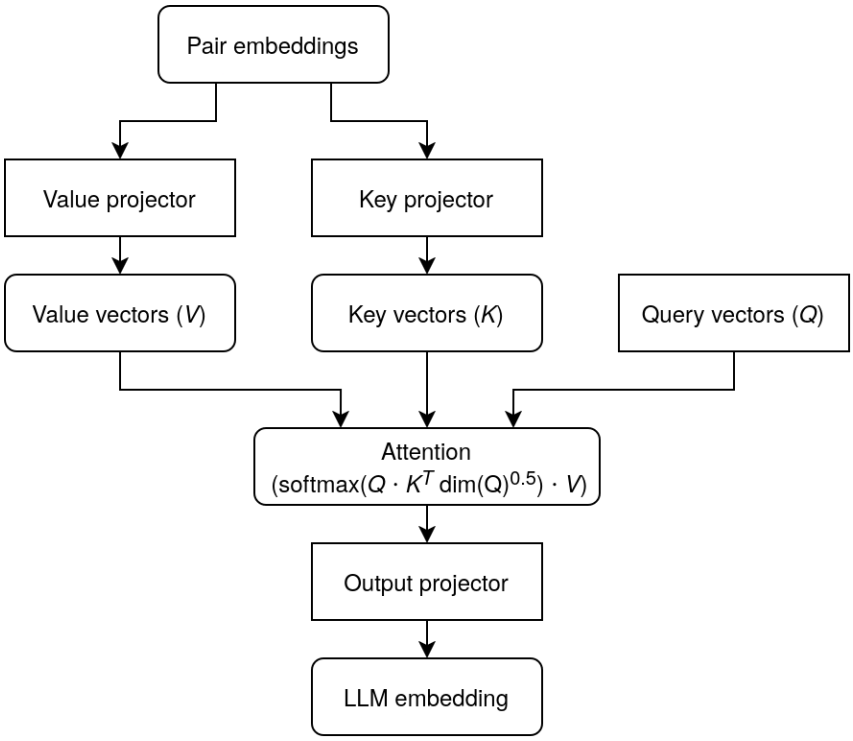

Figure 5.2: Attention embedding model - set aggregator module

is based on *epochs*, the implementation of gradient boosting algorithm does not rely on a explicitly set number of boosting iterations - contrary to the interface offered by, for example, `XGBoost` package. This dynamic approach makes it possible to perform validations or checkpointing between epochs, and most importantly allows us to implement a mechanism which reverts model state to the one that achieved the best validation accuracy. This means that longer training process can never have a negative effect on model quality - if the model starts to overfit to training data, or hits a plateau, it will be reverted to best recorded state.

Due to it's convenience, this state reverting mechanism was implemented in all iterative models implemented during this project.

TODO: results

5.6.2. DNN Model

The first deep learning model that was implemented uses a simple multi-layer neural network. It takes LLM embeddings, prompt embeddings, and prompt scalar features as input, and outputs a score representing how well given LLM would handle provided prompt.

Three distinct input vectors don't have to share any characteristics, like dimensionality, scale, or importance. For each, a separate projection layer was introduced. These layers transform input vectors into representations of set dimensionality, which subsequently are concatenated

and used as input to the following layers of the network.

Number and sizes of hidden layers are configurable. *LeakyReLU* was chosen as the activation function, with negative slope set to 0.1. Dropout layers were introduced between each pair of hidden layers to prevent overfitting. Additionally, *LayerNorm* layers were introduced for regularization, and gradient clipping was introduced to prevent gradient explosions during training.

The score assignment goal that the network tries to achieve does not inherently require any specific scale of outputs. As scores are only ever used for comparison, transforming them through any strictly increasing function does not change the quality of the result - for each compared pair of models, bigger score will still be bigger after the transformation. This ambiguity is undesired and impractical from human perspective. Introducing a secondary training objective could be a solution to this problem, however it is unnecessary in this case. Instead of introducing an additional loss term, whose influence may negatively impact the primary objective, score post-processing was introduced. After training, mean and standard deviation of scores assigned to training data is computed, such that subsequent inference results can be normalized to mean 0 and standard deviation equal to 1. Additionally, scaled scores are transformed using a scaled hyperbolic tangent function onto a $(-1, 1)$ range.

Two interchangeable loss functions were implemented: margin ranking loss and Bradley-Terry sigmoid cross-entropy loss. Initially, margin ranking loss seemed more favorable - once scores assigned to a given training pair satisfy the comparison with a margin, the pair has no contribution to loss gradients, and therefore model is not encouraged to widen the score gap. Intuitively, this is a desired behavior. Assigning a widely different scores to compared samples is by no means better than keeping their difference small. However, margin ranking loss turned out to under-perform significantly in practice. This observation motivated the implementation of an alternative.

TODO: results

5.7. Complex Models

5.7.1. Transformer Model

Sentence encoding transformers are a useful tool that transform text into a fixed-dimensional vector encoding it's meaning, hopefully in a way that's useful for subsequent machine learning tasks. The main input data of the scoring task is the prompt for which an LLM needs to be selected, and as such pretrained sentence transformers seem like a good candidate for the main, trainable part of the scoring model.

The core of the transformer model is a pretrained sentence transformer model, which is being fine-tuned during the training process. The output of the transformer model is passed to a scoring head, which consists of a small (configurable) number of dense layers, using *LeakyReLU* activation functions (with negative slope equal to 0.1) and dropout layers. Scoring head module also takes LLM embeddings and scalar prompt features as inputs (since, naturally, sentence transformer module only takes text as input). These input vectors are initially passed through projection layers, similarly to what is described in 5.6.2.

The core transformer model is loaded from *HuggingFace* using `sentence-transformers` library. [TODO: something more]. Wide variety of available models make it possible to test different options, with varying parameter counts, output dimensionalities, and architectures.

A number of fine-tuning methods were implemented. Initially, the easiest approach involved simply unfreezing n final layers of the model. This turned out to produce terrible results, while also not reducing the number of trainable parameters enough. [TODO: something more]. *LoRA* and *QLoRA* methods were implemented as alternatives. The main idea behind *LoRA* (or *Low Rank Adaptation*) is the introduction of a smaller number of new, trainable parameters, while keeping original model weights frozen. Effective, altered model weights are computed according to equation 5.4, where r is a configurable rank of the transformation. [TODO: ref + some justification?]

$$W' = W + AB \tag{5.4}$$

$$W \in R^{m \times n} \tag{5.5}$$

$$A \in R^{m \times r} \tag{5.6}$$

$$B \in R^{r \times n} \tag{5.7}$$

QLoRA extends *LoRA* method by also introducing model weight quantization. By default, transformer models usually use 16-bit floating point numbers as weights. QLoRA performs 8-bit quantization, followed by a 4-bit quantization using *NormalFloat4* technique [TODO: ref]. *NormalFloat4* encoding is a theoretically optimal way of encoding normally distributed values. While there is no theoretical reason to expect network weights to be normally distributed (although, perhaps, an argument could be made that this expectation is justified by Central Limit Theorem [TODO: ref], treating individual weight updates as random variables), this quantization method does seem effective in practice [TODO: ref]. Only the original model weights are quantized - new, trainable parameters from LoRA matrices retain their full, 16-bit representation. In addition to quantization, QLoRA also implements optimizer state pagination. To avoid

out-of-memory issues during training, optimizer parameters (momentum, cache, etc.) that are not in active use are transferred to CPU memory. This results in a time overhead caused by numerous data transfers between GPU and CPU memory, but allows training larger models on a given architecture. The comparison of *QLoRA* and other described fine-tuning is shown on figure 5.3.

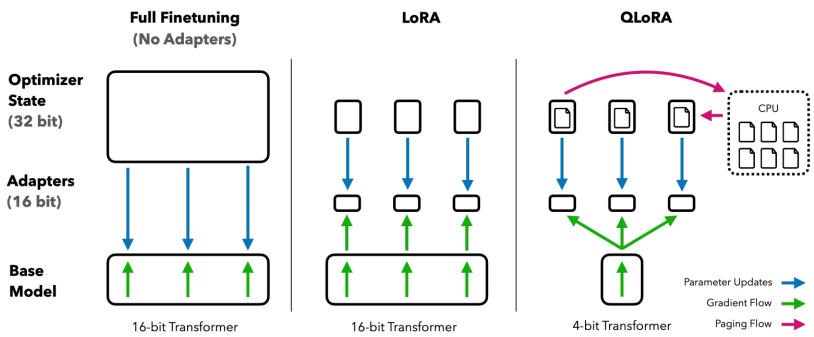

Figure 5.3: Fine-tuning methods comparison

The model is designed to learn most information required for score prediction through fine-tuning. This decision dictates the small size of scoring head module - it's only purpose is to combine LLM embedding vectors (and scalar prompt features, if they turn out to be useful) with prompt embeddings. However, this introduces certain risks. The "path length", or, more formally, number of operations, between prompt text and output is significantly bigger than between other inputs and output. This may cause the model to initially take the path of least resistance, focusing only on LLM embeddings (essentially learning optimal prompt-invariant score for each vector), and discarding prompt embeddings entirely, essentially blocking gradient flow to the transformer module.

To address this issue, simple concatenation of projections of scoring head input vectors was replaced by another combining operation. The goal is to discourage the model from learning scores that depend only on LLM embeddings, and instead encourage it to produce scores based on certain interactions between prompt representation and LLM embedding. To encode that interaction, scalar product was used. Scoring head module takes as input the scalar product of LLM embedding projection, and concatenated prompt embedding and scalar prompt features projections. As scalar product requires arguments to be of the same dimensionality, projection layer sizes were adjusted. Size of scalar features projection is configurable, with prompt embedding projection being twice as big, and LLM embedding projection - three times as big.

Of course, this approach does not guarantee that the model cannot ignore prompts. [TODO: handle zeroing prompt text input while keeping prompt features input]. To achieve that, while

retaining LLM embedding information, transformer module would need to learn to output a constant, non-zero vector for every prompt. Importantly, though, this state doesn't block the gradient flow to transformer module - even if the model initially does learn to ignore prompt information, it should, theoretically, be able to continue learning prompt-specific relationships after reaching optimal prompt-invariant scoring accuracy.

The same loss functions were implemented as in previously described models (in section 5.6.2). Furthermore, the same arguments prompted the decision to leave score values unconstrained during training, adding normalization and hyperbolic tangent transformation as a post-processing step, instead. Transformer model also uses the same state reverting mechanism, preventing loss of quality due to overfitting. Additionally, since training process of this model is significantly more time-consuming, checkpointing was implemented, saving model state every few epochs, which proved useful in case of crashes during training (mostly due to out-of-memory errors).

TODO: Results

5.7.2. Response Predictive Model

Models described in previous sections have one common characteristic: they do not use LLM responses during training, despite them being available in the dataset. The reason of that is quite obvious - LLM responses are not accessible at inference time. The whole point of assigning scores to LLMs is to be able to decide which will produce the best response, without actually requesting that response. Intuitively, if LLM responses were available, the task should be significantly easier. Assigning scores based only on the prompt and information about chosen LLM internally requires deducing certain response characteristics, based on which scoring can subsequently be performed.

The main idea of response predictive model is to utilize response data as much as possible, without requiring it for inference. This is achieved by dividing the scoring task into two parts, described in previous paragraph. First module, the predictor, is responsible for predicting response representation, given information about the prompt and chosen LLM. Second module, the scorer, is responsible for assigning a score, based only on that representation (without additional information about the LLM). End-to-end process retains the same input/output interface as other models, taking prompt and LLM data as input, and returning a score. However, explicit separation of evaluation steps opens new possibilities for training.

Prompt and LLM representations used by response predictive model are the same as in other models. Prompts are represented by text embedding vectors and scalar features, while LLMs are encoded as embedding vectors. As this model also uses LLM responses, they need to be represented somehow. The simplest possibility would be to use a similar representation to what

is described in section 5.5.2. This representation might be useful for scoring, however there is no guarantee that it would be possible to predict it from just prompt and LLM data. In general, predicting LLM responses is an extremely hard task - predicting all characteristics of the response would be essentially equivalent of generating the response, requiring parameter counts and training data volumes orders of magnitude larger than what's achievable in this project. So, response representation should be carefully tuned in such a way that it is still useful for the scoring module, while also being predictable by the predictor module.

Finding such a representation can be incorporated into the training process. A third module is introduced: response encoder. Given response representation (in format described in section 5.5.2), it learns to produce response embedding vectors.

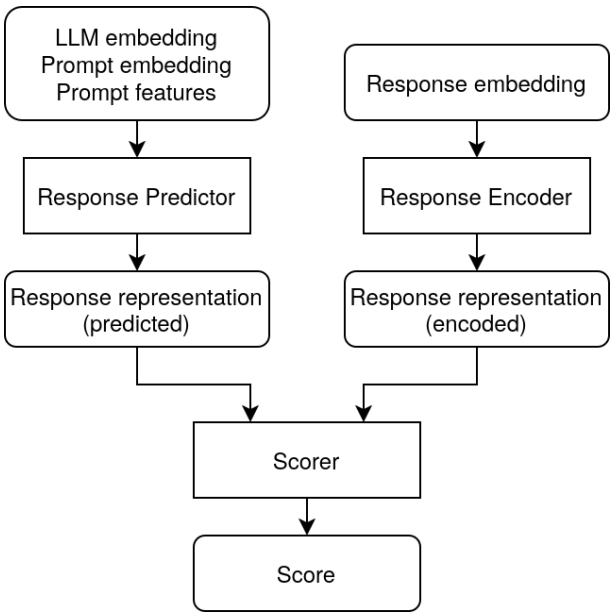

Figure 5.4: Response predictive model architecture

Four loss components are combined. First criterion is the same as scoring loss options that are used as in previously described models: either margin ranking loss or Bradley-Terry sigmoid cross-entropy. Second criterion encodes prediction accuracy [TODO: equation]. It encourages predictor module to produce outputs similar to those produced by response encoder. Encoder outputs are treated as constants in this case. Third criterion is the same as second, but treating predictor outputs as constants instead. It instructs response encoder module to produce representations that predictor module is able to predict. Fourth criterion is given by equation [TODO: ref]. It is a KL loss term, encouraging a normalized distribution of response embeddings. In particular, this prevents initial representation collapse to a single value - it is a trivially optimal solution to the second and third loss criterion. Importances of loss criteria are controlled by configurable weights.

[TODO: Change ‘real_repr‘ mixing] Importantly, predictor and response encoder operate on different inputs. Response encoder has access only to real LLM response representations, while predictor has no information about them. As responses are not available during inference, response encoder is not used in that case. It’s purpose is to help in discovering response representations that can be useful for scoring. Having access to actual responses, finding such embeddings should be much easier.

Modular structure of response predictive model makes it more interpretable than most other models, which usually function as black-box predictors. Each of the three modules has it’s separate role, making it easy to measure the quality with which it performs it’s task. In particular, we can decouple prediction errors from representation and scorer errors, by comparing scoring accuracy when response embeddings are predicted, with scoring accuracy using real response embeddings. Similarly, predictor quality can be tracked by measuring common regression metrics, like mean squared error or cosine similarity, and by comparing distributions of real and predicted embeddings - ideally, if predictor and encoder modules find some representation equilibrium, distribution should be similar.

TODO: results

5.7.3. Multistage Models

Models described in this section are focusing on assigning a score based on prompt and LLM information. In some cases, it’s possible to at least partially interpret their decisions ([TODO: ref]), but in general this formulation of the task does not imply any interpretability. To help with that, model chaining mechanism was introduced. Taking advantage of the fact that scores learned during training are not constrained in any way, given a trained scoring model as "base", another can be fitted on it’s errors, attempting to predict the difference between it’s predecessor and the true value. Final scores are defined as the sum of both predictions.

We can describe model chaining via equation 5.8. The main interpretability benefit comes from a possibility of constraining input values passed to each model - I_k for a model given by $Score_k$. By gradually extending the set of input components, impact of introduction of each component is clearly visible as an increase in joint model performance quality.

$$Score(I) = \sum_k Score_k(I_k), \quad \forall_k I_k \subset I \tag{5.8}$$

In LLM scoring task, multi-stage models can be especially useful when a prompt-invariant model is used as base. As described in section 5.4, optimal score assignment based only on chosen LLM is rather simple. By using such model and training a more complex model to

predict prompt-specific differences, we clearly separate accuracy and score contributions that use prompt information from base LLM-only "bias".

An additional advantage of multi-stage approach is faster training. Complex models may take multiple epochs before reaching the optimal prompt-invariant accuracy. If prompt-invariant model is used as base, however, optimal prompt-invariant accuracy is the starting point.

TODO: results

6. Response Length Prediction

TODO: Should it be a separate chapter?

6.1. Input and Output Data

TODO

6.2. Models

6.2.1. Gradient Boosting Model

TODO

6.2.2. DNN Model

TODO

7. Analysis of the Solution

TODO: Tests of all parts of the system, etc.

8. Conclusion

TODO

Bibliography

[1] J. Lee, Y. Lee, J. Kim, A. R. Kosiorek, S. Choi, Y. W. Teh, *Set Transformer: A Framework for Attention-based Permutation-Invariant Neural Networks*, Proceedings of the 36th International Conference on Machine Learning (ICML), PMLR 97, 2019.

[2] M. Zaheer, S. Kottur, S. Ravanbakhsh, B. Poczos, R. R. Salakhutdinov, A. J. Smola, *Deep Sets*, Advances in Neural Information Processing Systems (NeurIPS), vol. 30, 2017.

List of symbols and abbreviations

nzw.	nadzwyczajny
*	star operator
~	tilde

If you don't need it, delete it.

List of Figures

5.1 Attention embedding model - pair encoder module 25
5.2 Attention embedding model - set aggregator module 26
5.3 Fine-tuning methods comparison 29
5.4 Response predictive model architecture 31

If you don't need it, delete it.

Spis tabel

If you don't need it, delete it.

List of appendices

1. Appendix 1
2. Appendix 2
3. In case of no appendices, delete this part.