Parts List			
Qty	Part Number	Material	Mass
1	----	Steel	31.829 g

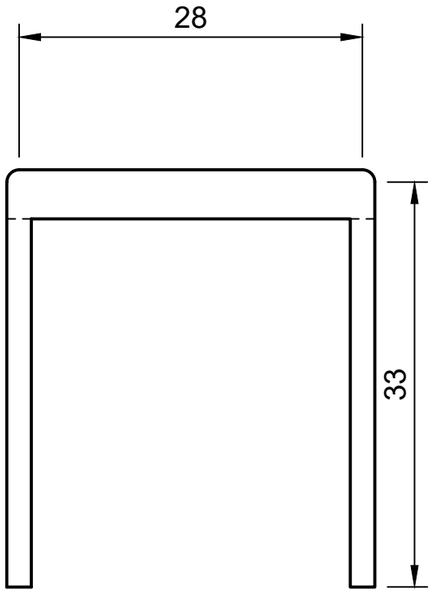

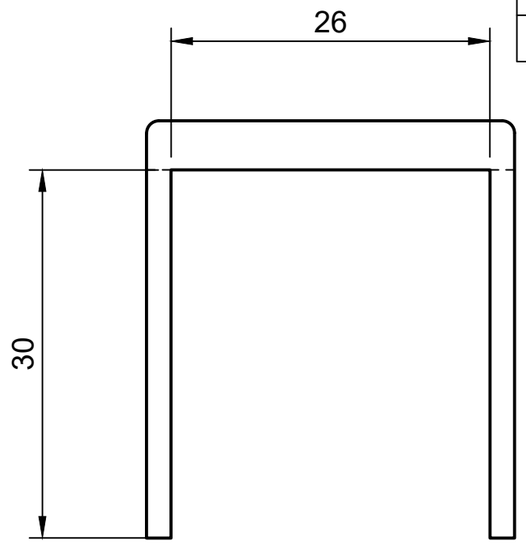

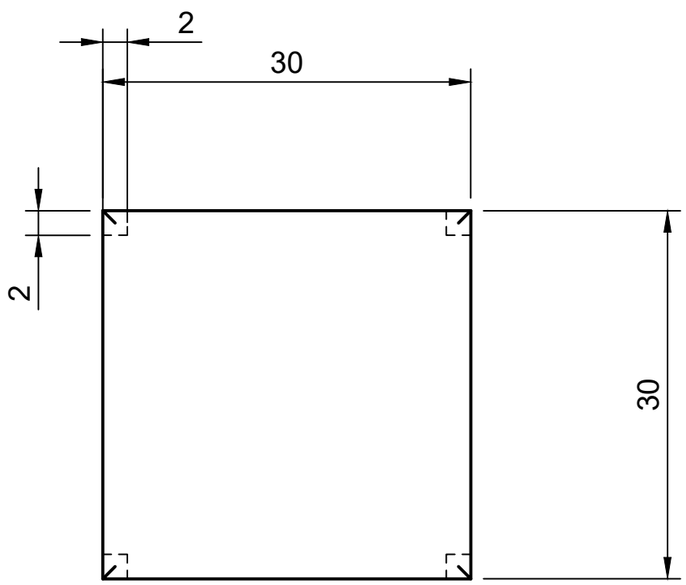

Dept.	Technical reference	Created by	Approved by
CSE	212225040230	MEGALA M S	DR.SARAVANAN M P
		Document type: 3D MODEL	Document status
		Title: EX:5.2:TABLE	DWG No.
			Rev. / Date of issue: 16/3/2026 / Sheet: 1/1