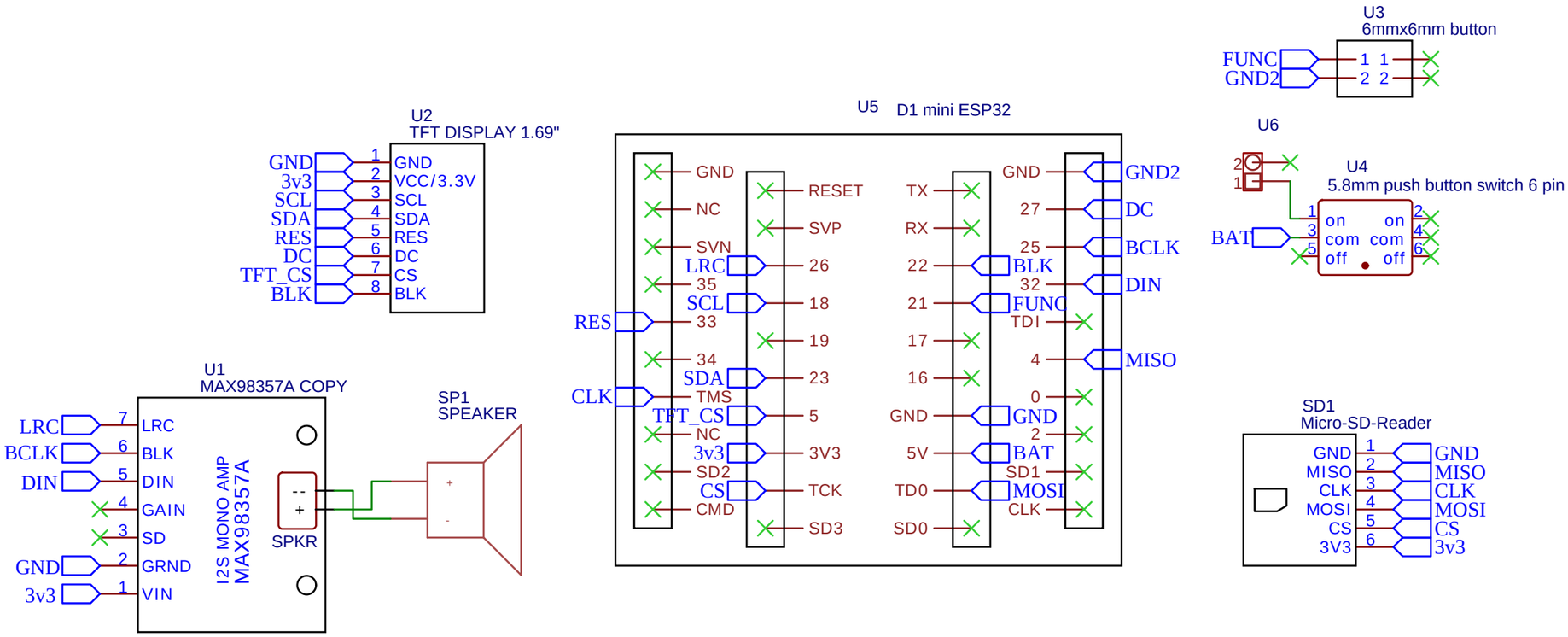

TITLE: Mini Retro TV remix		REV: 1.0
	Company:	Sheet: 1/1
	Date: 2023-10-20 Drawn By: Mzoid	