High-Power PDB with Integrated BEC

VCC 40-60V

All the passives chosen are:
- Rated for 60V+
- Is of 0603/1206 package
- lies in max +1% tolerance

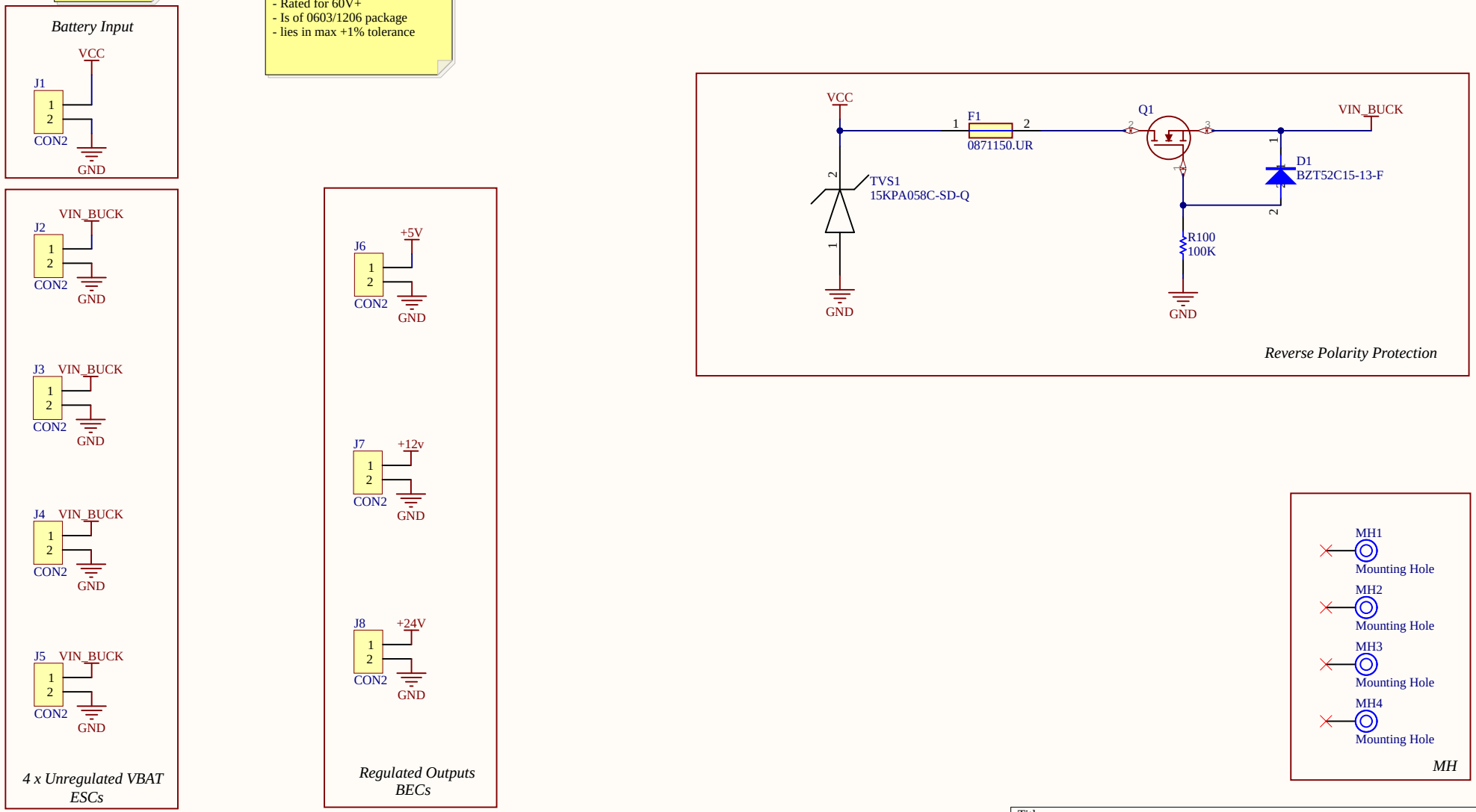

Title	High-Power PDB with Integrated BEC	
Size A4	Number	Revision
Date: 4-02-2026	Sheet of	
File: D:\05_Personal_Projects\..\Input Protection.SchDoc	Drawn By: Meghna C.	

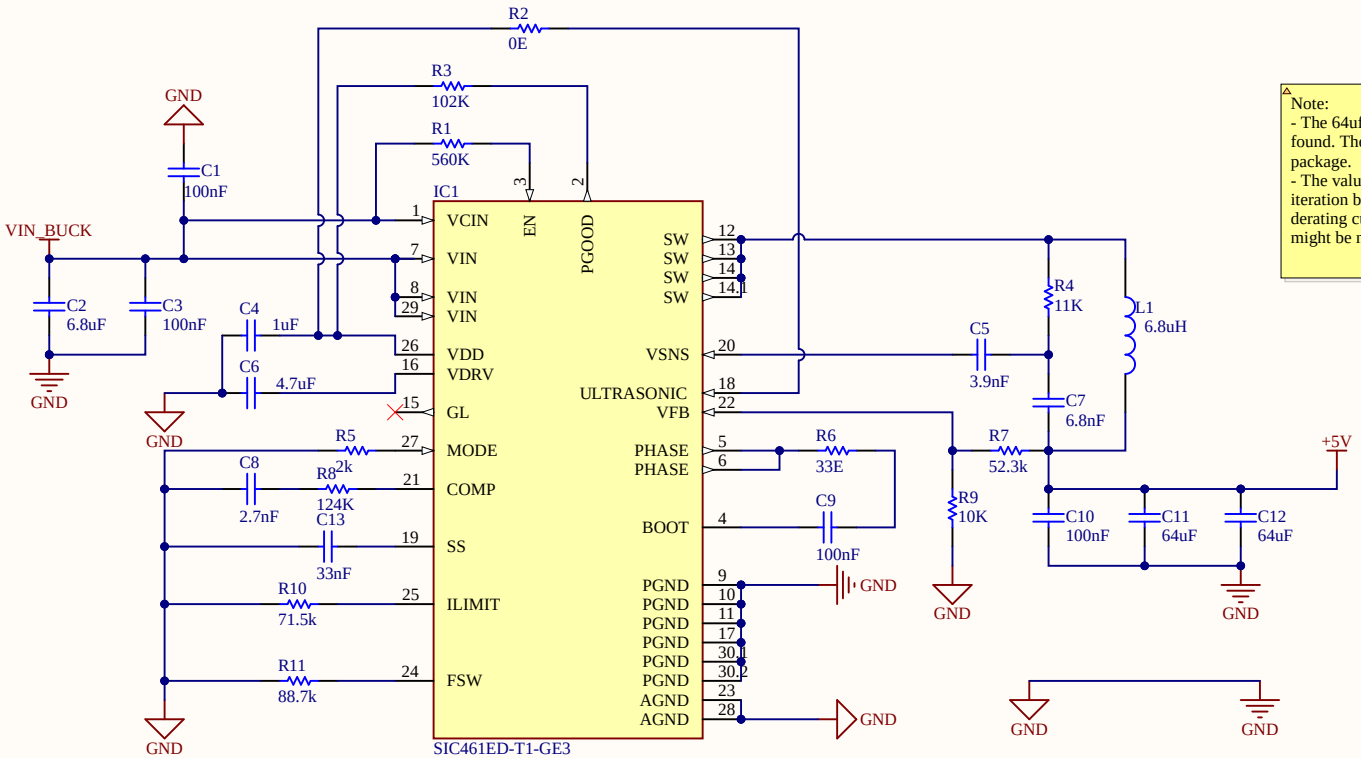

Note:
- The 64uf and 39uf value mostly THT are found. They can be soldered on the 1206 package.
- The values can be optimized at another iteration because at higher voltage and current, derating curves matter and multiple caps might be needed to compensate for the same.

Phase Margin: 93.6 Deg. F CrossOver: 30.8 kHz FSW 300 kHz Vin (nom) 48 V
Vout 5 V Iout 8 A

Title		
Size A4	Number	Revision
Date: 4-02-2026	Sheet of	
File: D:\05_Personal_Projects\..\48V to 5V@8A.SchDoc	Drawn By:	

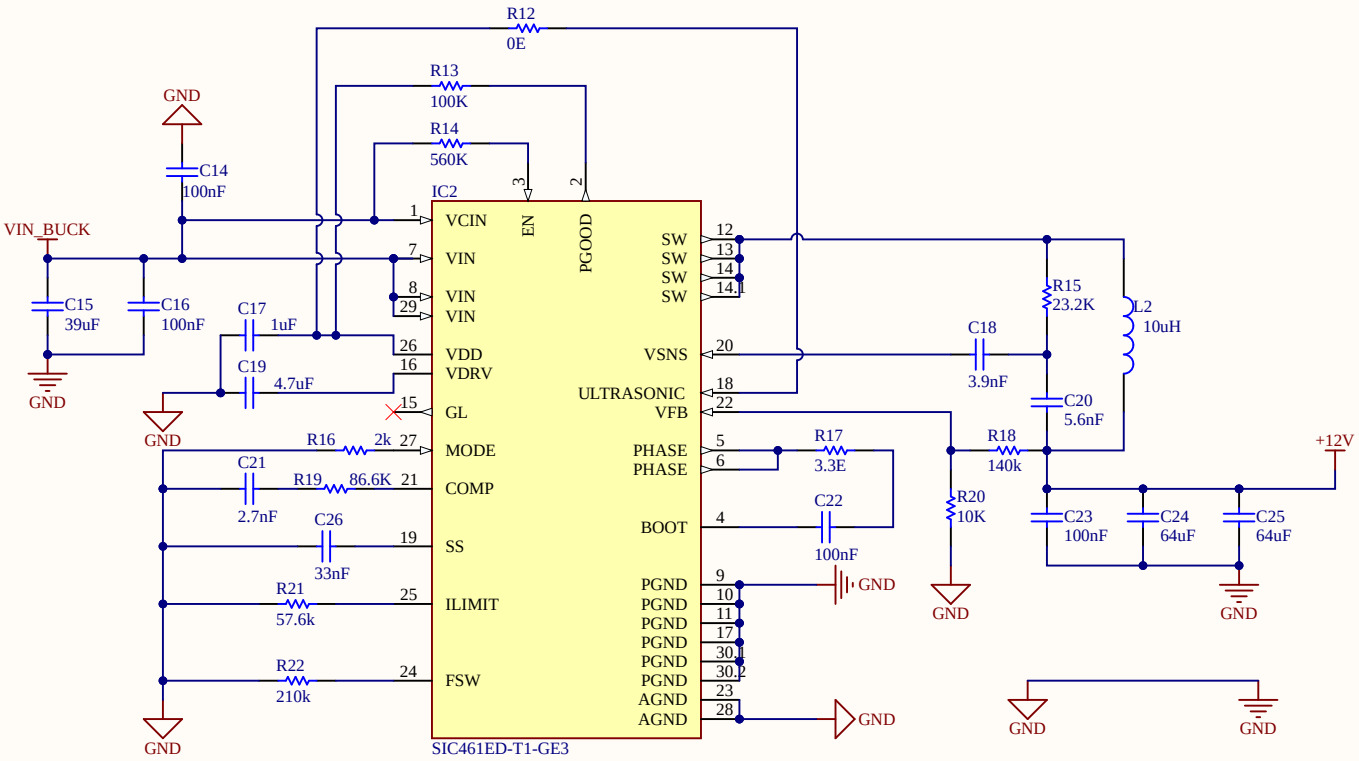

Phase Margin: 122 Deg. F CrossOver: 27.5 kHz FSW 300 kHz Vin (nom) 48 V
Vout 12 V Iout 10A

Title		
Size A4	Number	Revision
Date: 4-02-2026		Sheet of
File: D:\05_Personal_Projects\..\48V to 12V@10A.SchDoc		

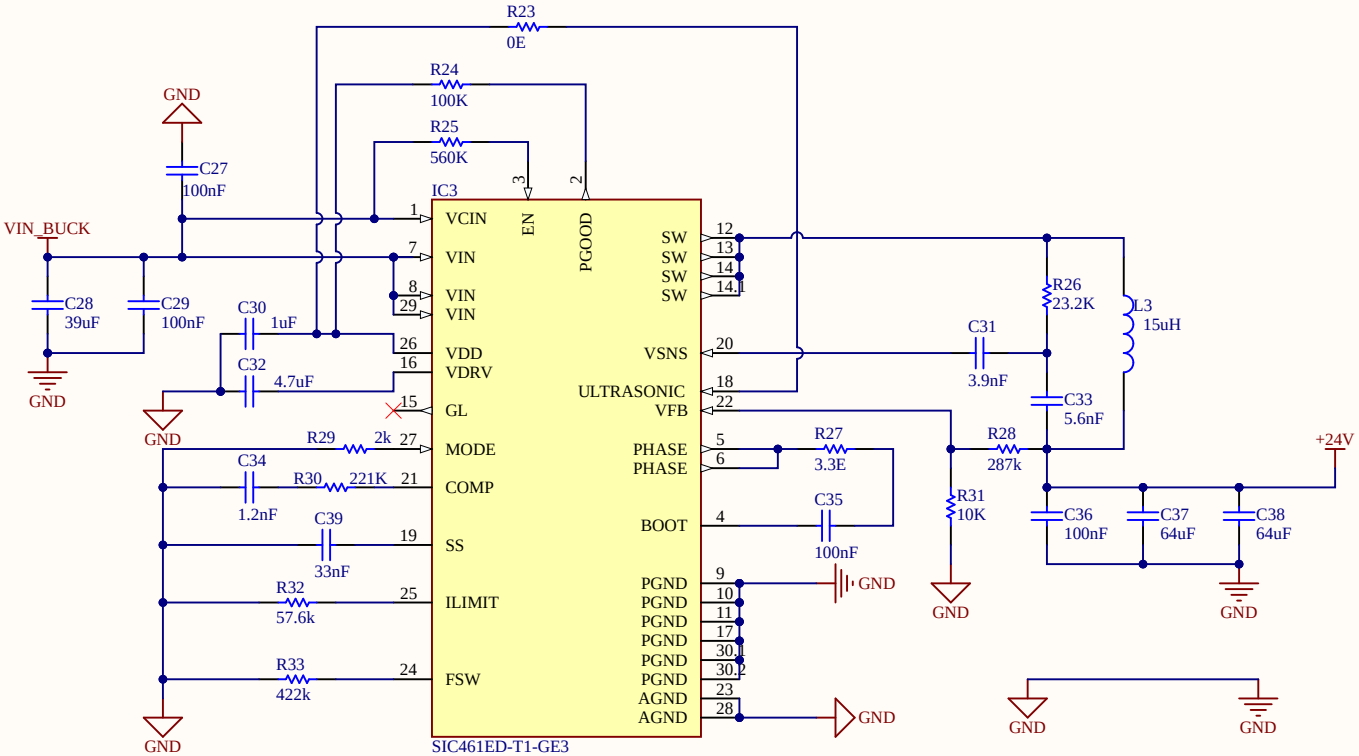

Phase Margin: 108 Deg. F CrossOver: 26.8 kHz FSW 300 kHz Vin (nom) 48 V
Vout 24 V Iout 10A

Title		
Size A4	Number	Revision
Date: 4-02-2026		Sheet of
File: D:\05_Personal_Projects\..\48V to 24V@10A.SchDoc		Drawn By: