SWITCH & CURRENT SENSE CIRCUIT

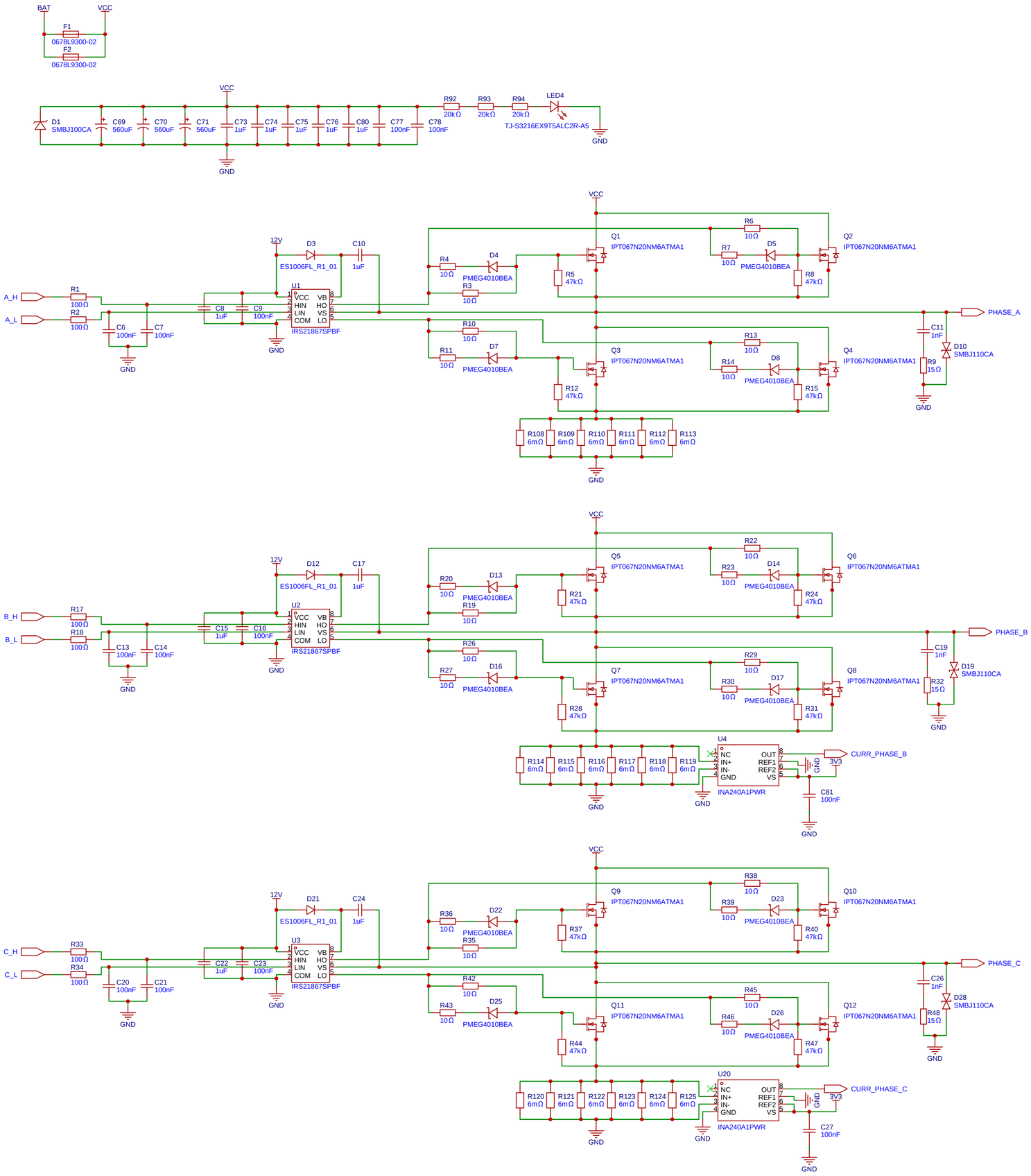

Schematic	Schematic1	Create at	2025-10-15
Board	Board1	Update at	2026-03-15
Drawn		Page	Base Circuit
Reviewed		Motor_Driver	
		Version	Size	Page 1 Total 2
EasyEDA		V1.0	A4	EasyEDA.com

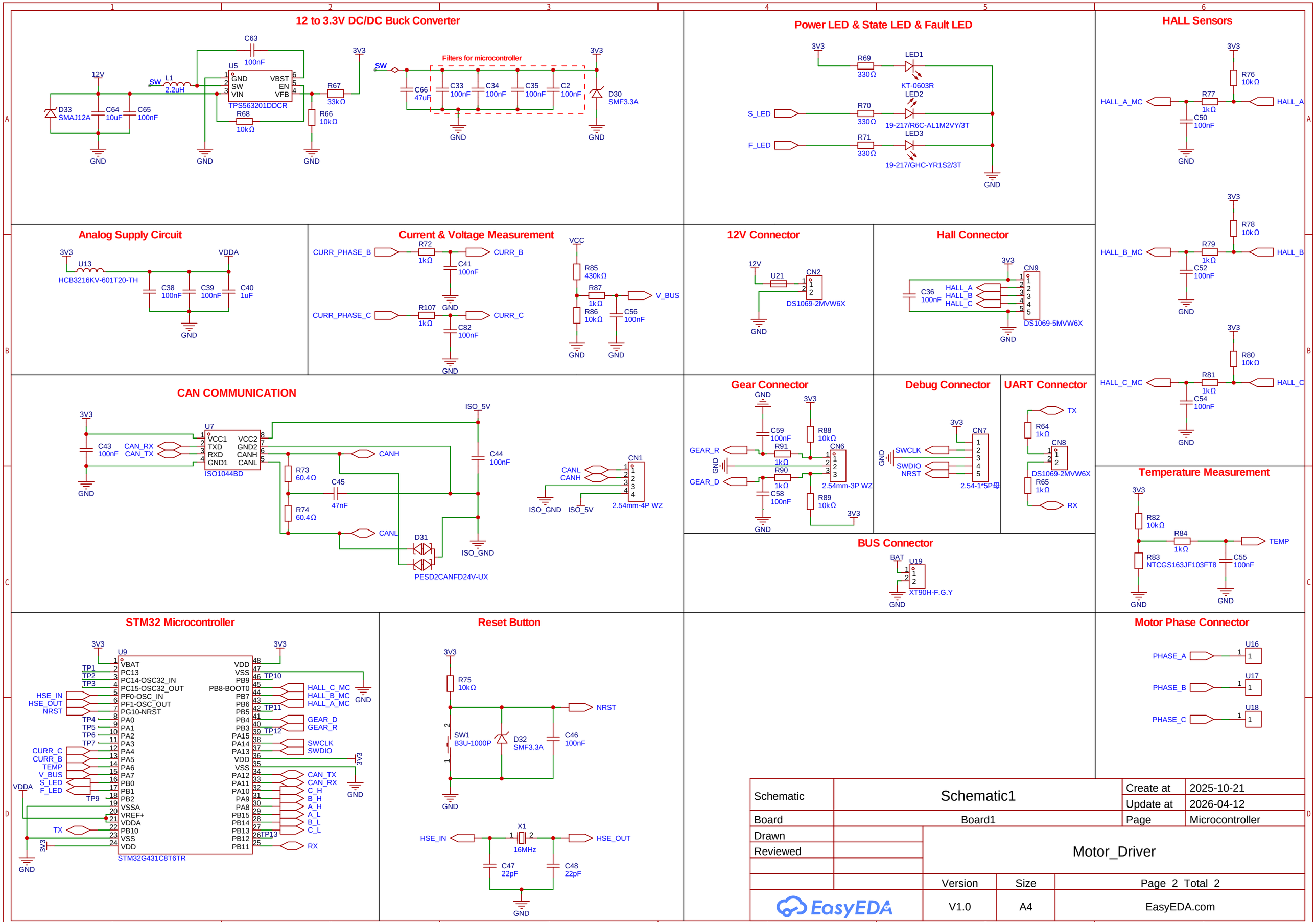
12 to 3.3V DC/DC Buck Converter
Power LED & State LED & Fault LED
HALL Sensors
Analog Supply Circuit
Current & Voltage Measurement
12V Connector
Hall Connector
CAN COMMUNICATION
Gear Connector
Debug Connector
UART Connector
BUS Connector
Temperature Measurement
STM32 Microcontroller
Reset Button
Motor Phase Connector
Filters for microcontroller
TPS563201DDCR
ISO1044BD
PESD2CANFD24V-UX
STM32G431C8T6TR
DS1069-2MVW6X
DS1069-5MVW6X
2.54mm-3P WZ
2.54mm-4P WZ
2.54-1*5P母
XT90H-F.G.Y
Schematic
Schematic1
Create at
2025-10-21
Update at
2026-04-12
Board
Board1
Page
Microcontroller
Drawn
Reviewed
Motor_Driver
Version
Size
Page 2 Total 2
V1.0
A4
EasyEDA.com