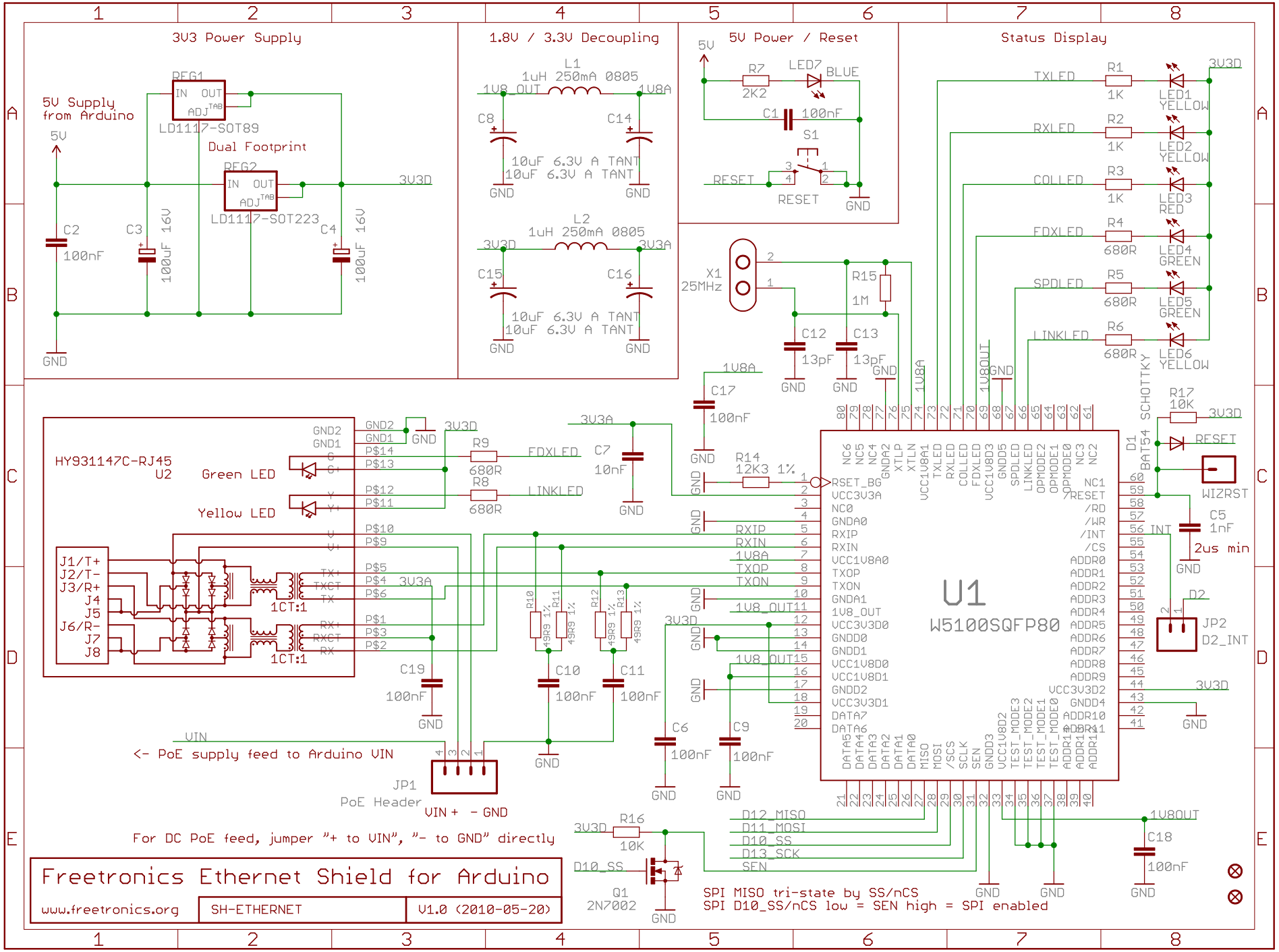
3V3 Power Supply
5V Supply from Arduino
5V
REG1
IN OUT
ADJ TAB
LD1117-SOT89
Dual Footprint
REG2
LD1117-SOT223
3V3D
C2 100nF
C3 100uF 16V
C4 100uF 16V
GND
1.8V / 3.3V Decoupling
L1 1uH 250mA 0805
1V8_OUT
1V8A
C8 10uF 6.3V A TANT
C14 10uF 6.3V A TANT
L2 1uH 250mA 0805
3V3A
C15 10uF 6.3V A TANT
C16 10uF 6.3V A TANT
5V Power / Reset
R7 2K2
LED7 BLUE
C1 100nF
S1
RESET
Status Display
TXLED R1 1K LED1 YELLOW
RXLED R2 1K LED2 YELLOW
COLLED R3 1K LED3 RED
FDXLED R4 680R LED4 GREEN
SPDLED R5 680R LED5 GREEN
LINKLED R6 680R LED6 YELLOW
X1 25MHz
R15 1M
C12 13pF
C13 13pF
C17 100nF
R14 12K3 1%
R17 10K
D1 BAT54 SCHOTTKY
WIZRST
C5 1nF
2us min
D2
JP2 D2_INT
HY931147C-RJ45 U2
Green LED
Yellow LED
R9 680R
R8 680R
C7 10nF
J1/T+
J2/T-
J3/R+
J4
J5
J6/R-
J7
J8
1CT:1
C19 100nF
C10 100nF
C11 100nF
C6 100nF
C9 100nF
U1
W5100SQFP80
VIN
<- PoE supply feed to Arduino VIN
JP1
PoE Header
VIN + - GND
For DC PoE feed, jumper "+ to VIN", "- to GND" directly
R16 10K
Q1 2N7002
D10_SS
D12_MISO
D11_MOSI
D10_SS
D13_SCK
SEN
C18 100nF
SPI MISO tri-state by SS/nCS
SPI D10_SS/nCS low = SEN high = SPI enabled
Freetronics Ethernet Shield for Arduino
www.freetronics.org
SH-ETHERNET
V1.0 (2010-05-20)

Prototyping Area

Draw your project schematic here