Innovative Technology
INTELLIGENCE IN VALIDATION

BV30

"The next generation compact bill acceptor"

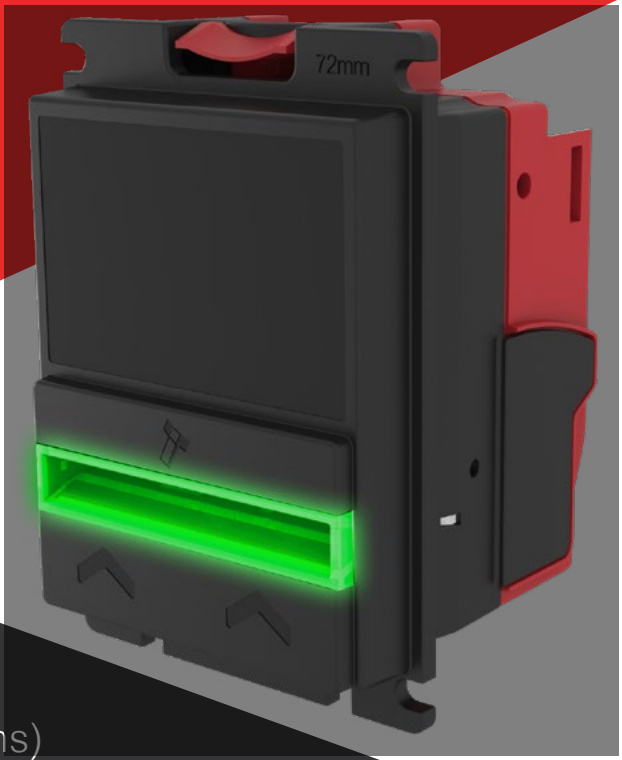

- Attractive bezel illumination (RGB options)
- Exceptional value
- Enhanced sensing & security
- Ideal for low value transactions

FEATURES

- Improved optical & mechanical anti-strimming
- Improved note sensing - UV & reflective
- Exceptional value
- Proven field reliability
- Easy maintenance, free firmware updates, remote download SMART data compatible
- Faster note processing
- Attractive, compact design

BENEFITS

- Enhanced security
- Genuine note detection and protects against fraudulent notes
- A bill acceptor for the price of a coin mech
- Lowest cost of ownership
- Future proof
- Takes more cash
- Ideal for low value transactions

Innovative Technology
INTELLIGENCE IN VALIDATION

Technical Specification

Power
Requirements: 12V
Standby: 150mA
Running: 540mA
Peak: 1.5A

Bezel
72mm illuminated

Protocols
SSP
ccTalk
MDB
Pulse
Parallel
Binary
Serial

Interfaces
Open collector

MCBF
100,000

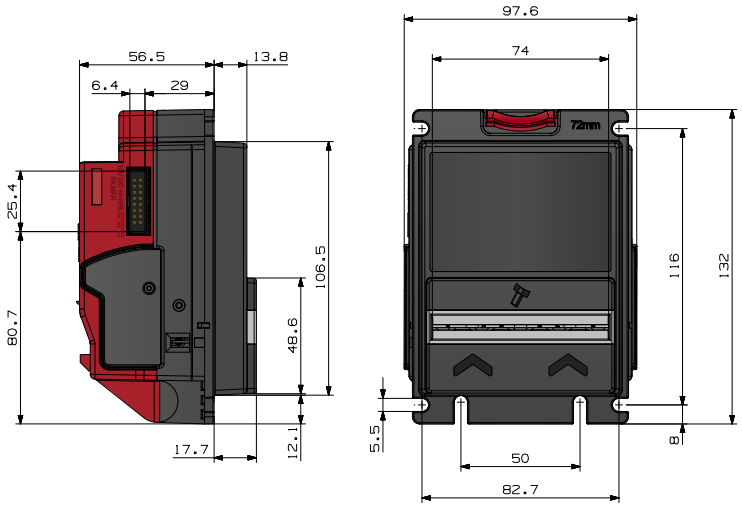

- Weight: 300g