Innovative Technology®
INTELLIGENCE IN VALIDATION

NV10 USB+

"Compact stackerless banknote validator"

- Compact stackerless design
- Enhanced sensing technology
- Proven field reliability
- Future proof
- One build standard for global applications

FEATURES

- Compact, stackerless note validator
- Proven field reliability
- Over 100 different world currencies accepted
- Industry standard protocols
- Easy maintenance, free firmware updates

BENEFITS

- Suitable for most applications
- Lowest cost of ownership
- A truly global product
- Simple integration
- Future proof - quick & easy updates via USB, PC or handheld programmer

Innovative Technology
INTELLIGENCE IN VALIDATION

Technical Specification

Power

Requirements: 12V

Standby: 0.2A

Running: 1A

Peak: 1.5A

Interfaces

USB option
Open collector

Protocols

SSP

ccTalk

MDB

Pulse

Parallel

Binary

Serial

Bezel Options

66/82mm width

Extended

Rainbow illumination

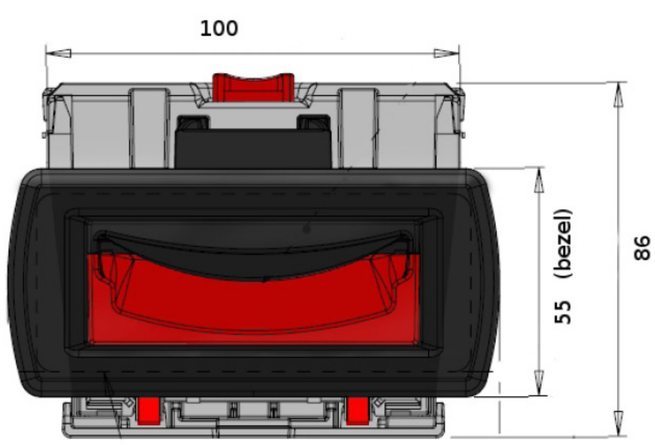

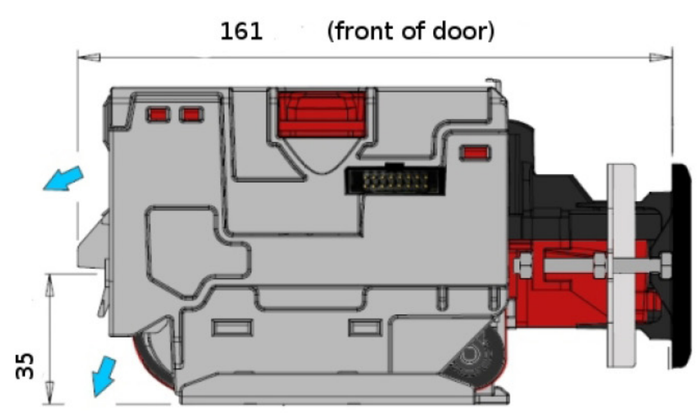

- Weight: 0.55kg