VPOS Touch

All-in-one Card Reader with Touch Screen and Telemetry Device

VPOS Touch User Manual

© Property of Nayax

All rights reserved

Table of Contents

General Information 3
Organization of the Manual 3
Device Overview 4
Device Summary 4
Device Specifications 5
Device Components 7
Device Serial Number 8
Device Cables 9
Device Connector Scheme (40-Pin) 10
Additional Accessories (Included in Box) 10
Getting Started 12
Installation 12
Device Dismantling 12
Operating and Testing 12
Configure VPOS Touch Settings in NayaxVend 13
Technician Mode 14
Appendix 1 – Tests Prior to Repair 15
Appendix 2 - FCC & IC Regulations 17
Safety and Handling Instructions 19
Environmental Guidelines 19
Warranty and Liability 19
Cleaning Instructions 19

General Information

This section explains the classification of the manual and the purpose for which it is intended.

Organization of the Manual

The user manual consists of six sections namely General Information, Device Overview, Getting Started, Appendix 1 – Tests Prior to Repair, Appendix 2 – FCC & IC Regulations and Safety & Handling Instructions.

General Information section explains the purpose for which the manual is intended.

Device Overview section provides an overview of the device. The summary outlines the uses of the hardware and software requirements, device configuration, and device behavior in case of any contingencies.

Getting Started section explains the first steps to start using the device.

Appendix 1 – Tests Prior to Repair section describes how to resolve the most frequent issues experienced prior to sending the device to the Nayax Laboratory.

Appendix 2 – FCC & ICC Regulations lists all the production regulations and guidelines.

Lastly, the Safety and Handling section provides guidelines on how to clean and maintain the device.

Device Overview

Device Overview section provides an overview of the device, feature highlights, device specifications and much more.

Device Summary

VPOS Touch is a complete telemetry and cashless payment solution, ideally suitable for the unattended machines' market.

VPOS Touch accepts all modes of cashless payments and transmits data in real-time. The different modes of payment accepted are:

- Debit and credit cards
- Mobile and NFC payments
- Prepaid cards
- Swipe, contact and contactless cards

The advantages of using the device are enabling easy installation, monitoring machines in real-time and a complete management solution. Our complete management solution consists of:

- Inventory Management
- Machine Management
- Transaction Monitor
- Alerts and Event System
- Reports Suite
- BI System

Feature Highlights

- ARM, Cortex 32-bits (M4 + M7)
- High Security Encryption System: AES / DES
- External flash 64 MB, SD Card 4 GB, SD RAM 16 MB
- Anti-vandal with Dragontrail glass
- Shock and tilt detector
- Monitoring and alert of Power Down
- Decorative LED for Contact Smart Card slot

Pro Tip

The VPOS Touch has no battery and receives power via its connection to the vending machine. Strong shock or vibrations to the device may cause failure.

Device Specifications

Installation Environment		
Operating Temperature	-20 ℃ to 55 ℃	-4°F to 131°F
Storage Temperature	-30 ℃ to 85 ℃	-22°F to 185°F
Humidity	25% to 95% (non-condensing)	
Dust & Water Resistance	IP 55	
Flammability	UL-94 V0	
Safety	CE, FCC, RoHS	
Physical Dimensions		
Height	105 mm	4.1 inch
Width	84.7 mm	3.3 inch
Depth	45.3 mm	1.78 inch
Weight	230 grams	8.1 ounces
Features		
Display Screen	High quality color touch LCD Display 2.4 inch IPS, 400 nits 320 x 240 pixels + 4 LEDs + 6 Touch buttons	
Architectutre	ARM Technology – 2x Cortex, 32 bit, 180/216MHz	
Audio	Speaker + Buzzer	
Localization	Multiple language support - LCD text & voice audio instructions	
Security	Support DES, 3DES, AES, RSA, ECC, SHA1 algorithms, Random Number Generator	
Power Supply	12-42V DC, 12-24V AC; 5 Watts	
Power Consumption	Recommended External Power Supply: 24V DC / 2Amp.	
Glass	Internal shock/tilt detector, anti-vandal Dragontrail glass, anti-fingerprint coating	
Power-loss protection	Super capacitors with safe shutdown mechanism	

Communication & Interfaces	
External Interface	Ethernet, 2 X RS232 (RS232 or TTL level through SW), USB device, external reader
Contactless	13.56 MHz : NFC, MIFARE, ISO 14443 Type A and B, ISO 15693, SONY® FeliCa
Pulse Input/Output	6 pulse input/output interfaces + 1 Inhibit input
External Sensors Support	1 Door open & 1 Temperature
Communication	3G/4G/Ethernet/NFC
Machine Protocols	MDB / DEX / DDCMP / Pulse / VCCS / ccTalk / JVMA
Payments	
Contact	EMV Level 1 , EMV Level 2
Contactless	EMV Level 1 , FeliCa
	Level 2: Visa payWave, MasterCard PayPass, Interac Flash, UnionPay qPBOC, AMEX ExpressPay, JCB J/Speedy, FeliCa, Interac Flash, , Discover D-PAS, CUP QuickPass, SuiCa
Magnetic Stripe	ISO 7811 and JIS I Tracks 1,2,3 JIS II

Device Components

Front Panel

Front Panel Color - Yellow / Black

Rear Side

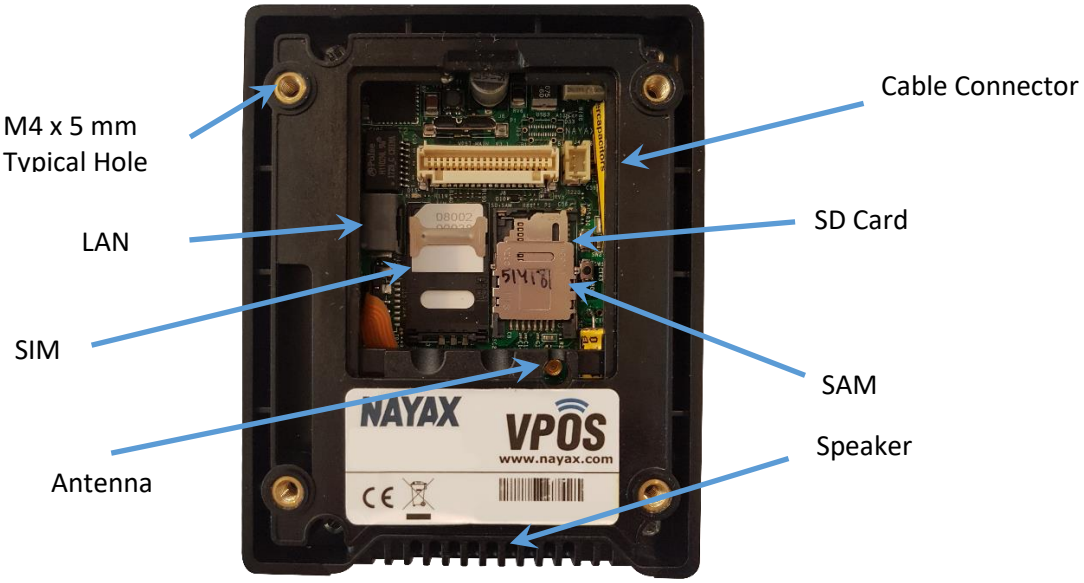

Device 2D Scheme

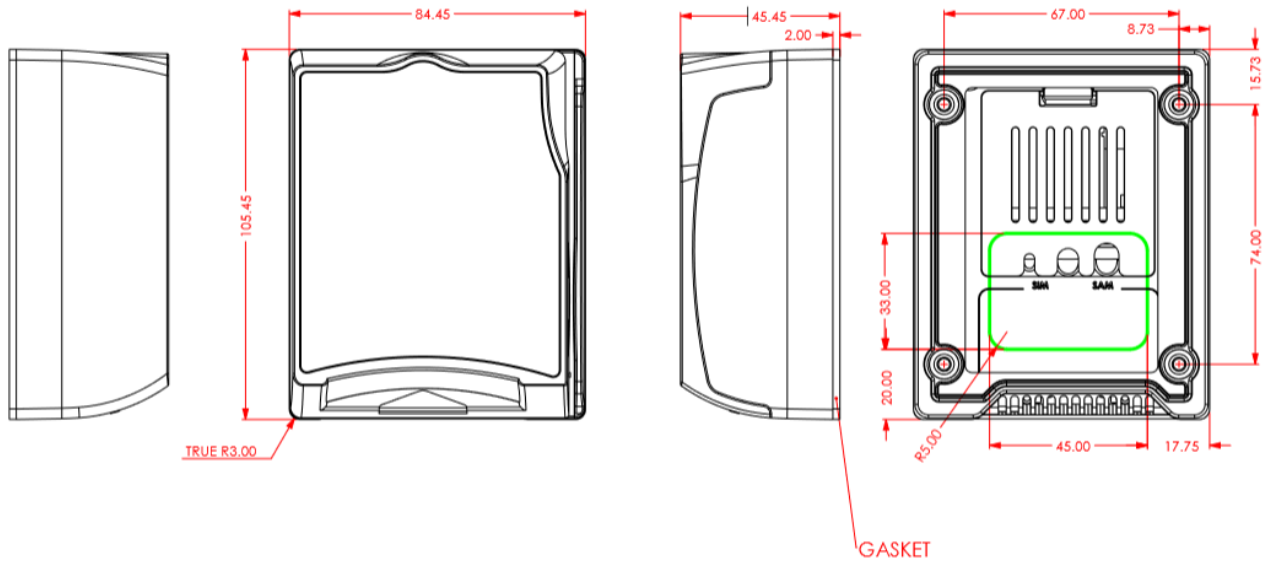

Device Serial Number

Serial number logic: PPMAPOWWYYSSSSSS

Characters	Description
PP	Product Type (E.g. For VPOS Touch - 04)
MA	Main HW Version
PO	POS HW Version
WW	Week Number
YY	Year
SSSSSSS	Serial

Device Cables

Nayax provides different configuration cables to suit different machines. The below table refers to each cable and its configuration

Image	Connector	Connect to
	MDB	MDB in vending machines
	JVMA	JVMA in vending machines (Japan)
	DEX	DEX
	RS232 DB9 Female	Serial
	VPOS Touch	Nayax VPOS Touch *Refer to the device connector scheme (40-pin) below.
	Contessa	Nayax Contessa (Japan)

Device Connector Scheme (40-Pin)

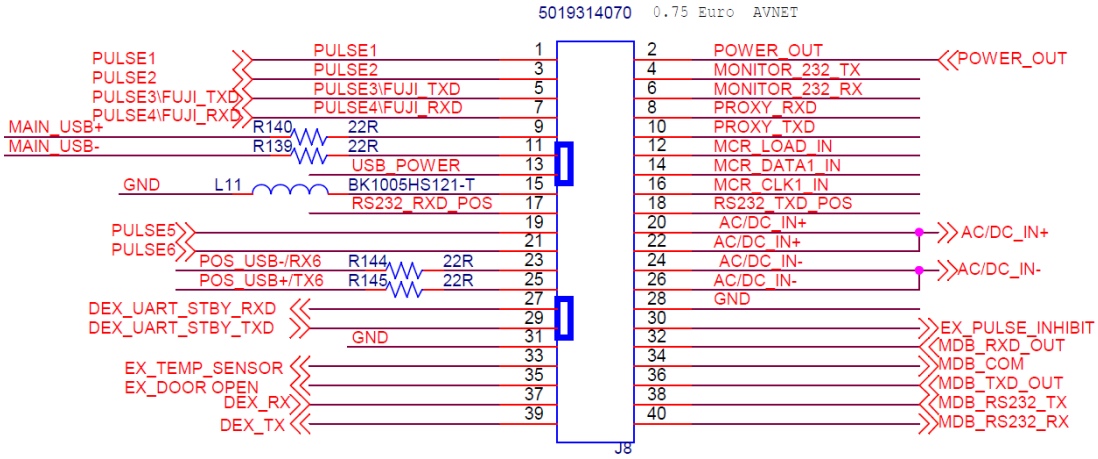

Additional Accessories (Included in Box)

Rear Plate & Drilling Template	Stencil
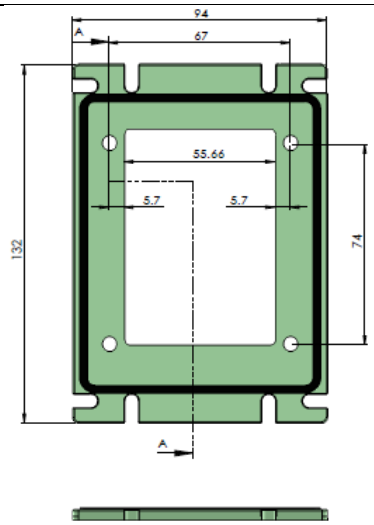	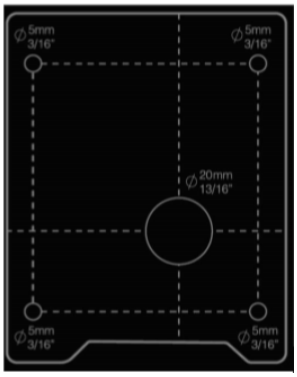

Additional Accessories (Optional)

Reclining Spacer (Angle = 7.5 degrees)	Protective Box
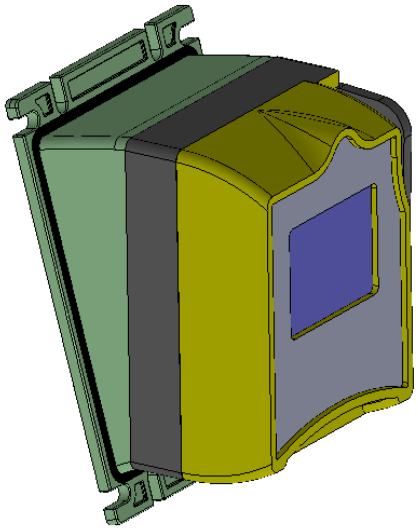	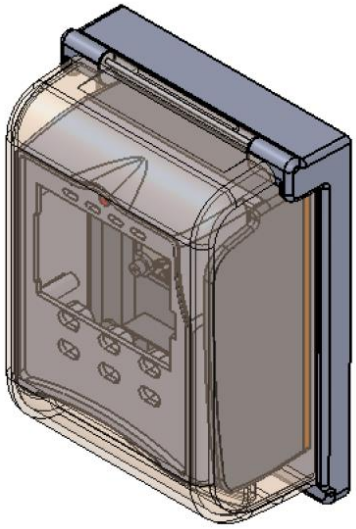

Getting Started

Getting Started section briefly explains how to install the device on the machine, the operating and testing process and the different screens.

Installation

The latest Installation Guide version is currently available and can also be downloaded from NayaxVend. The VPOS Touch Quick Guide has been included in your box for your quick reference.

Device Dismantling

To unplug the VPOS Touch connector, you must press both sides of the releasing bridge at the same time to avoid damaging the releasing bridge.

Operating and Testing

> ***Pro Tip***
> *Before performing any checks, make sure that the machine is loaded with products and that the prices are updated in the system.*

1. Turn on the machine.
2. Once the VPOS Touch is powered-up, a Self-Test is automatically initiated that performs a SIM card and Server Connectivity check.

Note: If the device is not installed correctly, you may see an error message

3. Once the VPOS Touch is fully initialized, carry out the following trial purchases
   a. Cash /Credit Purchase
   b. E-money (E.g. A prepaid card transaction)

Once all purchases are successfully completed, the unit is fully installed and ready for use!

> ***Pro Tip***
> *In case you need to send your device to the Nayax Laboratory for review, refer to the* ***Error! Reference source not found. Error! Reference source not found.*** *Prior to Repair.*

Configure VPOS Touch Settings in NayaxVend

- Refer to the below attributes used to configure the VPOS Touch device in the NayaxVend system.
- Payment Methods - Controls the type of payments that are displayed on the Welcome screen (VISA, Mastercard, Apple Pay, Samsung Pay, etc.)
- Support WEB - Displays the website that is visible under the Menu - Contact Us function.
- Support Phone Number - Displays the phone number that is visible under the Menu - Contact Us function.
- Technician Code - Controls the pin code to access the Technician mode screen.
- Menu Timeout - Controls the timeframe (in seconds) for the unit to return to the Welcome screen after the menu button is pressed.
- Menu Functions - Controls the options to be displayed when the Menu button is pressed. It is possible to disable the Menu button entirely or display only the selected features such as:
    I. Technician Mode
    II. Report a Problem
    III. Contact Us
    IV. Device Info
    V. Nutrition Facts
    VI. Languages

Technician Mode

To enter the **Technician Mode** either present the Technician Card in the Idle mode or click the **Triple Bar** from the Menu. Click the **Technician Mode** button and then enter the **technician code** and click the green **OK** button.

Technician Mode Commands

Under the technician mode, three different screens are visible.

The first screen consists of two buttons that are configured by logging into the Management Suite – NayaxVend DCS.

The next two screens consist of a pre-defined collection of options that are listed below:

Icon	Icon Name	Description
	Cash Collection	Indicates to the server that cash was collected
	Poll	Initiate Keep Alive communication with the server
	Reboot	Checks for updated device version in the boot server
	Inventory Fill	Indicates to the server that the machine inventory was filled
	Fee	Defines the extra charge (convenience fee) for various payment methods
	Reset	Restarts the VPOS Touch firmware
	Read Audit File	Initiates DEX read from the machine and sends it to the server
	Advanced Settings	Configure additional Nayax / Felica (JP) device parameters
	Modem Info	Displays modem details, version info, reception level, and so on
	View Audit	Displays DEX file on screen
	Volume	Adjust the audio volume level
	Language Settings	Set the audio and text languages

Appendix 1 – Tests Prior to Repair

The below procedure needs to be carried out by the Operator before sending the device to be fixed at the Nayax laboratory.

1. Connect the VPOS Touch **Cable Connector** to get power from the machine – Refer to below Image 1.

2. Once the device starts to load, the following initiation messages are displayed:
   I. **FW OK**
   II. **Init mdm**
   III. **RSSI 99** - In this case there are three options to proceed:
      a. **RSSI 99** - Check the **External Antenna Adapter** connected to the board - Refer to Image 2
      b. **(SIM) / RST** – This could refer to a SIM issue. In that case, confirm that the Sim socket is closed securely and if required, try to replace the SIM card - Refer to Image 3
      c. **RSSI => 10** – This is normal, and you can proceed to the next step.
   IV. **Mobile operator**
   V. **Init GPRS**
   VI. **TCPIP OK**
   VII. **Gloader Test –** In case you need to install a new Firmware Version it will run:
      a. Gloader x.x.x TCPIP OK
      b. Running FW … TCPIP OK
   VIII. **Nayax**
   IX. **Ready**

Image No.	Title	Image	Description
1	VPOS Touch Connector	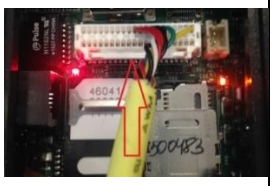	VPOS Touch cable connector (same connector for MDB and Pulse cables). ❶ ***Note:*** *To disconnect the connector, press the latch (indicated with an arrow) before pulling out the cable.*
2	External Antenna Adapter (replace image)		The External Antenna adapter connects to the board and to the External Antenna that is provided by Nayax.
3	Sim Housing	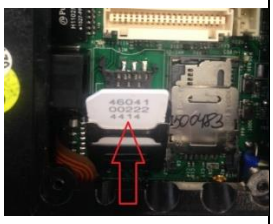	The SIM socket is opened by pulling up and closed by puling down the socket.

3. Test the following payment cards:
   I. Magnetic Card – In case of an error, check the Magnetic Head connection to the board – Refer to Image 4.
   II. Contact Card & Contactless Card - In case of an error, send it to the Nayax Laboratory
   III. In case the speaker is not functional, check the **Speaker Connection** to the board – Refer to Image

Appendix 2 - FCC & IC Regulations

This device complies with part 15 of the FCC Rules. The operation is subject to the following two conditions: (1) This device may not cause harmful interference, and (2) this device must accept any interference received, including interference that may cause undesired operation.

Note: *This equipment has been tested and found to comply with the limits for a Class B digital device, pursuant to Part 15 of the FCC Rules. These limits are designed to provide reasonable protection against harmful interference in a residential installation. This equipment generates, uses and can radiate radio frequency energy and, if not installed and used in accordance with the instructions, may cause harmful interference to radio communications. However, there is no guarantee that interference will not occur in a particular installation. If this equipment does cause harmful interference to radio or television reception, which can be determined by turning the equipment off and on, the user is encouraged to try to correct the interference by one or more of the following measures:*

- Reorient or relocate the receiving antenna.
- Increase the separation between the equipment and receiver.
- Connect the equipment into an outlet on a circuit different from that to which the receiver is connected.
- Consult the dealer or an experienced radio/TV technician for help.

Note: *The manufacturer is not responsible for any radio or TV interference caused by unauthorized modifications to this equipment. such modifications could void the user's authority to operate this equipment*

Changes or modifications not expressly approved by the party responsible for compliance could void the user's authority to operate the equipment.

This device complies with Industry Canada RSS standard(s). Operation is subject to the following two conditions: (1) this device may not cause interference, and (2) this device must accept any interference, including interference that may cause undesired operation of the device.

Le présent appareil est conforme aux CNR d'Industrie Canada applicables aux appareils radio exempts de licence. L'exploitation est autorisée aux deux conditions suivantes:

(1) il ne doit pas produire de brouillage et

(2) l' utilisateur du dispositif doit étre prêt à accepter tout brouillage radioélectrique reçu, même si ce brouillage est susceptible de compromettre le fomctionnement du dispositif.

The VPOS Touch IDs are:

- FCC ID: 2AK6L-VPOST
- IC: 10840A-VPOST

The VPOS Touch device is available with two cellular modules.
These are the two options:

- Contain FCC ID: RI7LE910NAV2, Contains IC: 5131A-LE910SNAV2
- Contain FCC ID: RI7LE910SVL, Contains IC: 5131A-LE910SVL

Safety and Handling Instructions

It is advised to read the manual carefully before attempting to use the device.

Environmental Guidelines

It is recommended to avoid installing the device in direct sunlight to prevent any risk of burnouts. Make sure not to expose the product to any corrosive gas or liquid. It is important to deploy the device in non-condensing conditions.

Warranty and Liability

Thank you for choosing Nayax. Read the Nayax 24 months Limited Warranty Terms and Limitations included in your contract. In the unlikely event that your device needs repair service or for additional information, please contact us .

Your warranty shall be void in case the device is damaged due to vandalism and/or any corrosion issues.

Cleaning Instructions

You can use a soft, dry cloth for cleaning purposes. In case your device is extremely dirty, use a small amount of alcohol. Make sure not to use organic solvents such as thinner and benzene.