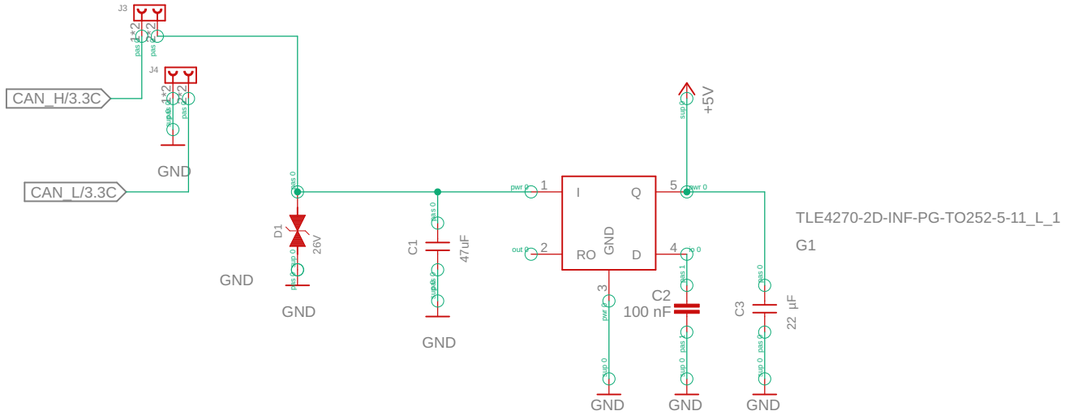
J3
J4
CAN_H/3.3C
CAN_L/3.3C
GND
D1
26V
C1
47uF
I
Q
RO
GND
D
+5V
TLE4270-2D-INF-PG-TO252-5-11_L_1
G1
C2
100 nF
C3
22 µF

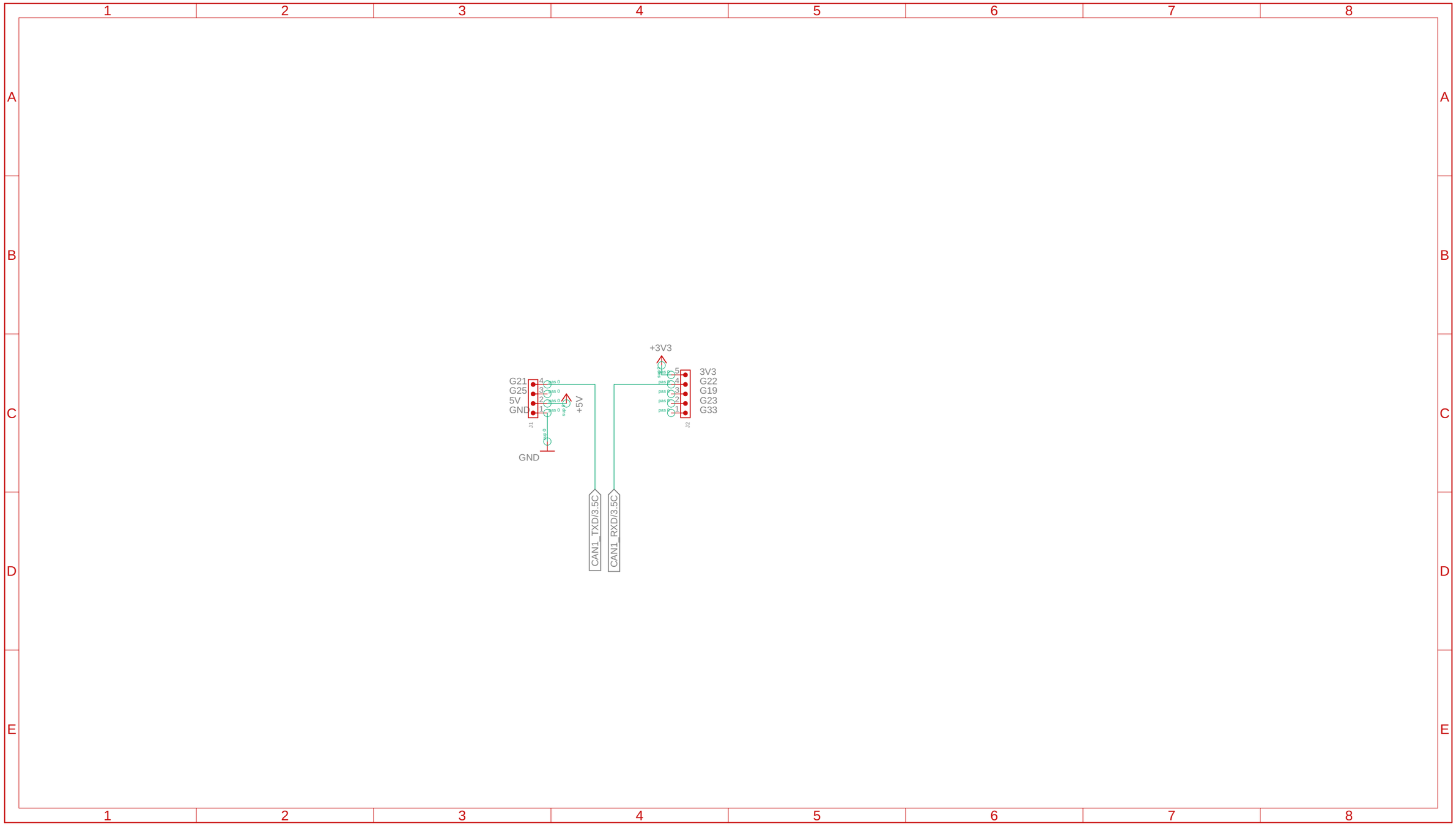
G21
G25
5V
GND
J1
+5V
GND
+3V3
3V3
G22
G19
G23
G33
J2
CAN1_TXD/3.5C
CAN1_RXD/3.5C

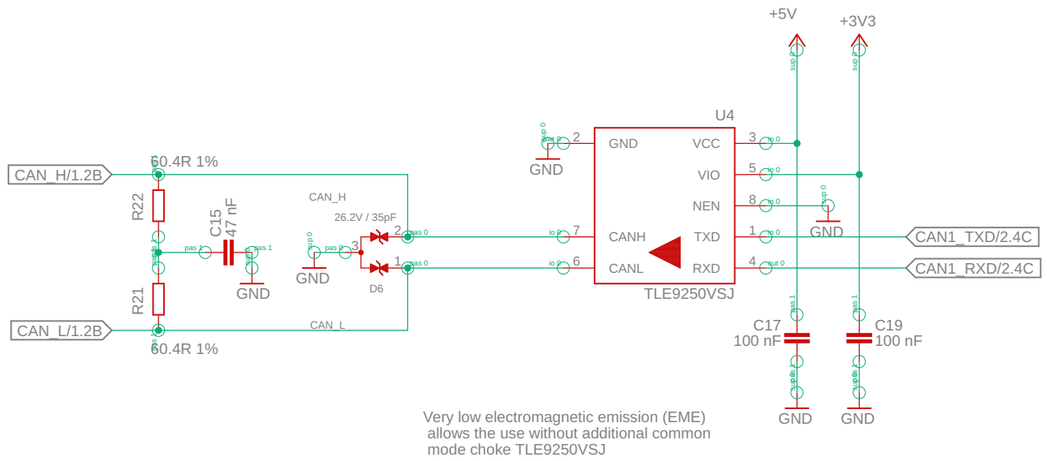
CAN_H/1.2B
CAN_L/1.2B
60.4R 1%
R22
R21
C15
47 nF
GND
CAN_H
CAN_L
26.2V / 35pF
D6
U4
GND
VCC
VIO
NEN
CANH
TXD
CANL
RXD
TLE9250VSJ
+5V
+3V3
CAN1_TXD/2.4C
CAN1_RXD/2.4C
C17
100 nF
C19
100 nF
Very low electromagnetic emission (EME)
allows the use without additional common
mode choke TLE9250VSJ