ECU_GND

ECU_PWR

PWR

PWR_GND

https://obstwein-technik.eu/Core?aktiveNavigationsID=879&fachbetraegeID=209

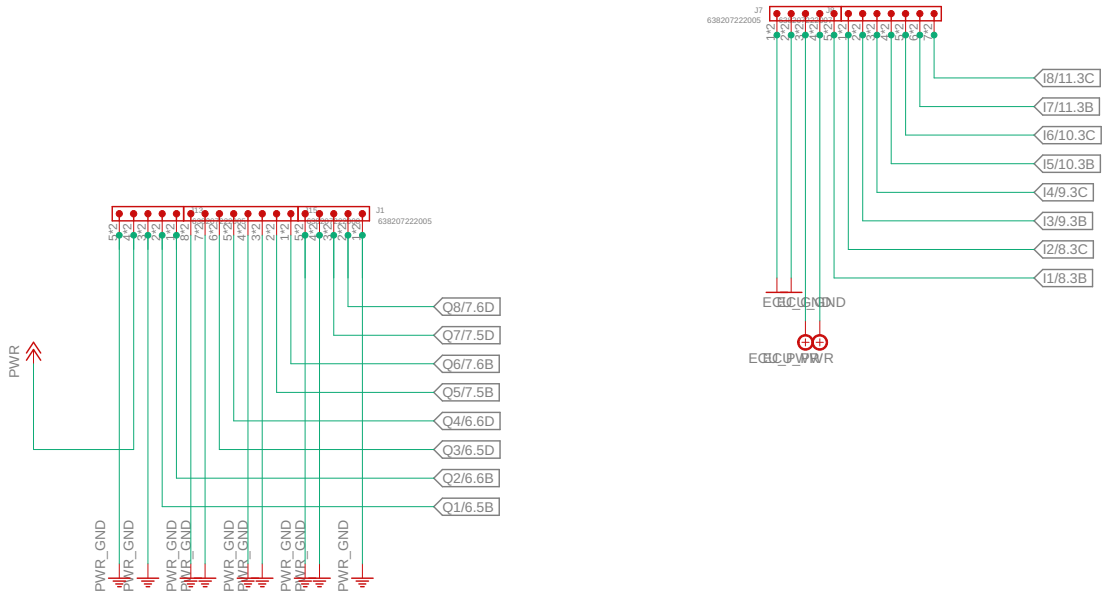
J1
638207222005
PWR
Q8/7.6D
Q7/7.5D
Q6/7.6B
Q5/7.5B
Q4/6.6D
Q3/6.5D
Q2/6.6B
Q1/6.5B
PWR_GND
J7
638207222005
I8/11.3C
I7/11.3B
I6/10.3C
I5/10.3B
I4/9.3C
I3/9.3B
I2/8.3C
I1/8.3B
ECU_GND
ECU_PWR

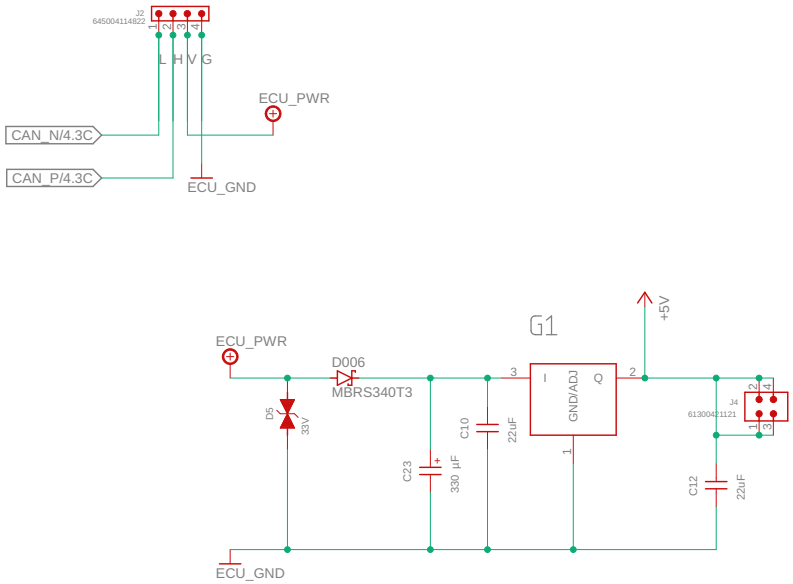
J2
645004114822
1 2 3 4
L H V G
ECU_PWR
CAN_N/4.3C
CAN_P/4.3C
ECU_GND
G1
+5V
ECU_PWR
D006
MBRS340T3
D5
33V
C23
330 µF
C10
22uF
3
I
GND/ADJ
Q
2
1
J4
613004121121
2 4
1 3
C12
22uF
ECU_GND

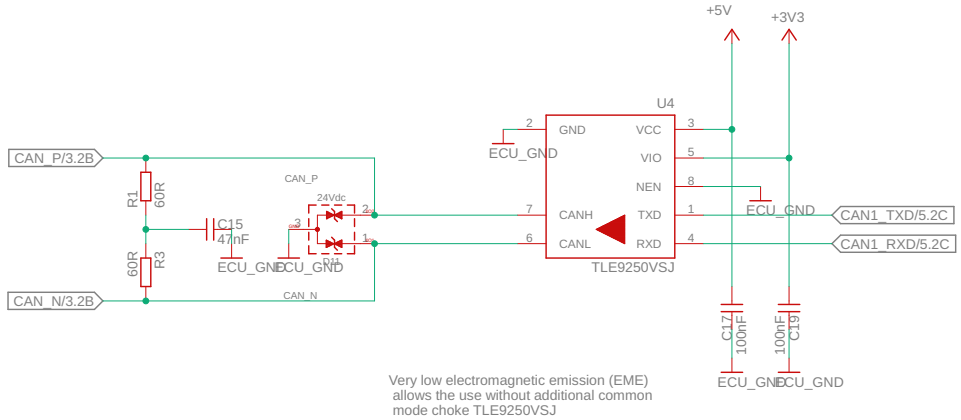
CAN_P/3.2B
CAN_N/3.2B
R1
60R
R3
60R
C15
47nF
ECU_GND
CAN_P
CAN_N
24Vdc
D1
ECU_GND
U4
GND
VCC
VIO
NEN
CANH
TXD
CANL
RXD
TLE9250VSJ
ECU_GND
+5V
+3V3
ECU_GND
CAN1_TXD/5.2C
CAN1_RXD/5.2C
C17
100nF
C19
100nF
ECU_GND
ECU_GND
Very low electromagnetic emission (EME)
allows the use without additional common
mode choke TLE9250VSJ

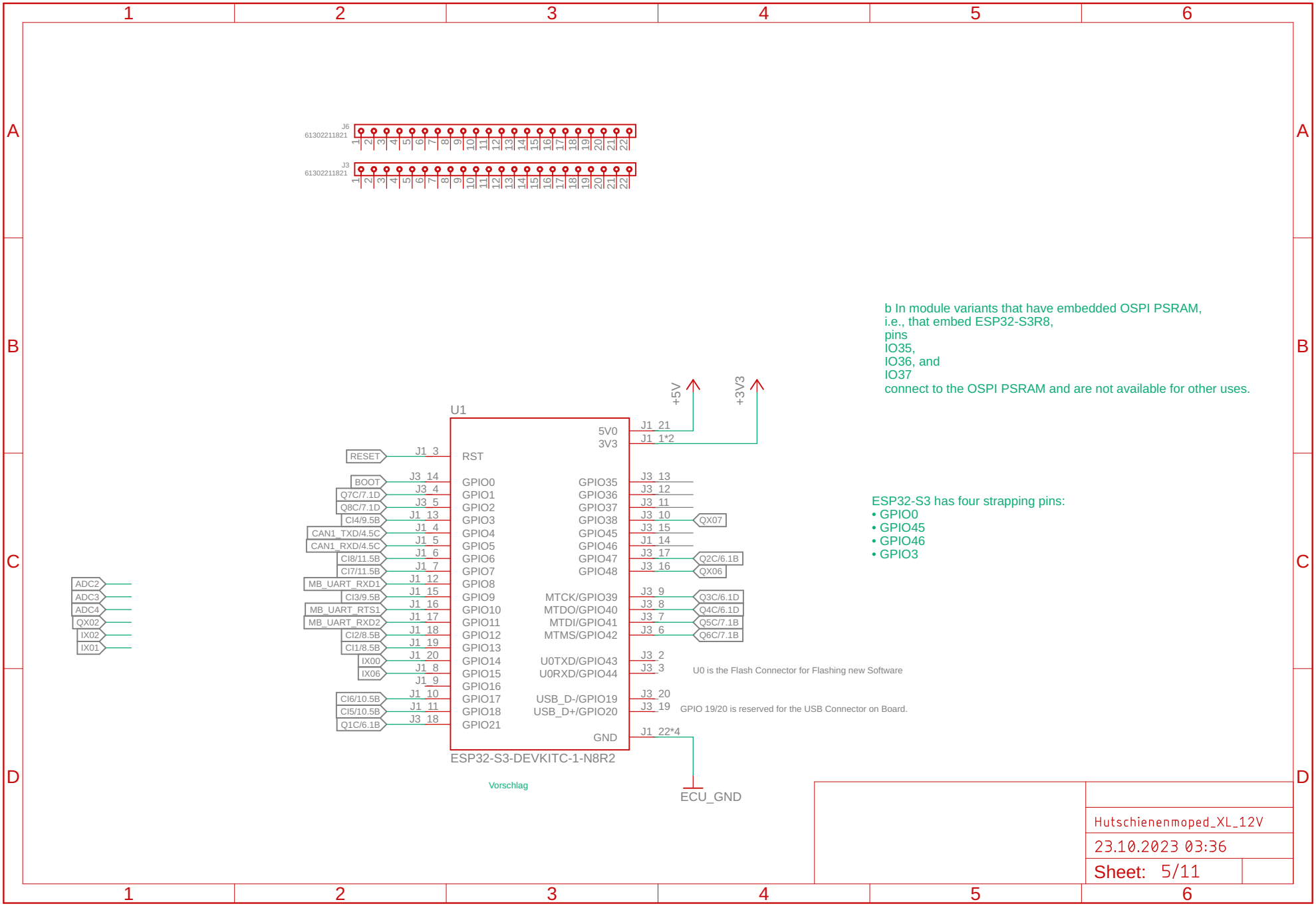
J6
61302211821
J3
61302211821
b In module variants that have embedded OSPI PSRAM,
i.e., that embed ESP32-S3R8,
pins
IO35,
IO36, and
IO37
connect to the OSPI PSRAM and are not available for other uses.
+5V
+3V3
U1
5V0
3V3
J1_21
J1_1*2
RESET
J1_3
RST
BOOT
J3_14
GPIO0
Q7C/7.1D
J3_4
GPIO1
Q8C/7.1D
J3_5
GPIO2
CI4/9.5B
J1_13
GPIO3
CAN1_TXD/4.5C
J1_4
GPIO4
CAN1_RXD/4.5C
J1_5
GPIO5
CI8/11.5B
J1_6
GPIO6
CI7/11.5B
J1_7
GPIO7
MB_UART_RXD1
J1_12
GPIO8
CI3/9.5B
J1_15
GPIO9
MB_UART_RTS1
J1_16
GPIO10
MB_UART_RXD2
J1_17
GPIO11
CI2/8.5B
J1_18
GPIO12
CI1/8.5B
J1_19
GPIO13
IX00
J1_20
GPIO14
IX06
J1_8
GPIO15
J1_9
GPIO16
CI6/10.5B
J1_10
GPIO17
CI5/10.5B
J1_11
GPIO18
Q1C/6.1B
J3_18
GPIO21
GPIO35
J3_13
GPIO36
J3_12
GPIO37
J3_11
GPIO38
J3_10
QX07
GPIO45
J3_15
GPIO46
J1_14
GPIO47
J3_17
Q2C/6.1B
GPIO48
J3_16
QX06
MTCK/GPIO39
J3_9
Q3C/6.1D
MTDO/GPIO40
J3_8
Q4C/6.1D
MTDI/GPIO41
J3_7
Q5C/7.1B
MTMS/GPIO42
J3_6
Q6C/7.1B
U0TXD/GPIO43
J3_2
U0RXD/GPIO44
J3_3
USB_D-/GPIO19
J3_20
USB_D+/GPIO20
J3_19
GND
J1_22*4
ESP32-S3-DEVKITC-1-N8R2
Vorschlag
ECU_GND
ADC2
ADC3
ADC4
QX02
IX02
IX01
ESP32-S3 has four strapping pins:
• GPIO0
• GPIO45
• GPIO46
• GPIO3
U0 is the Flash Connector for Flashing new Software
GPIO 19/20 is reserved for the USB Connector on Board.
Hutschienenmoped_XL_12V
23.10.2023 03:36
Sheet: 5/11

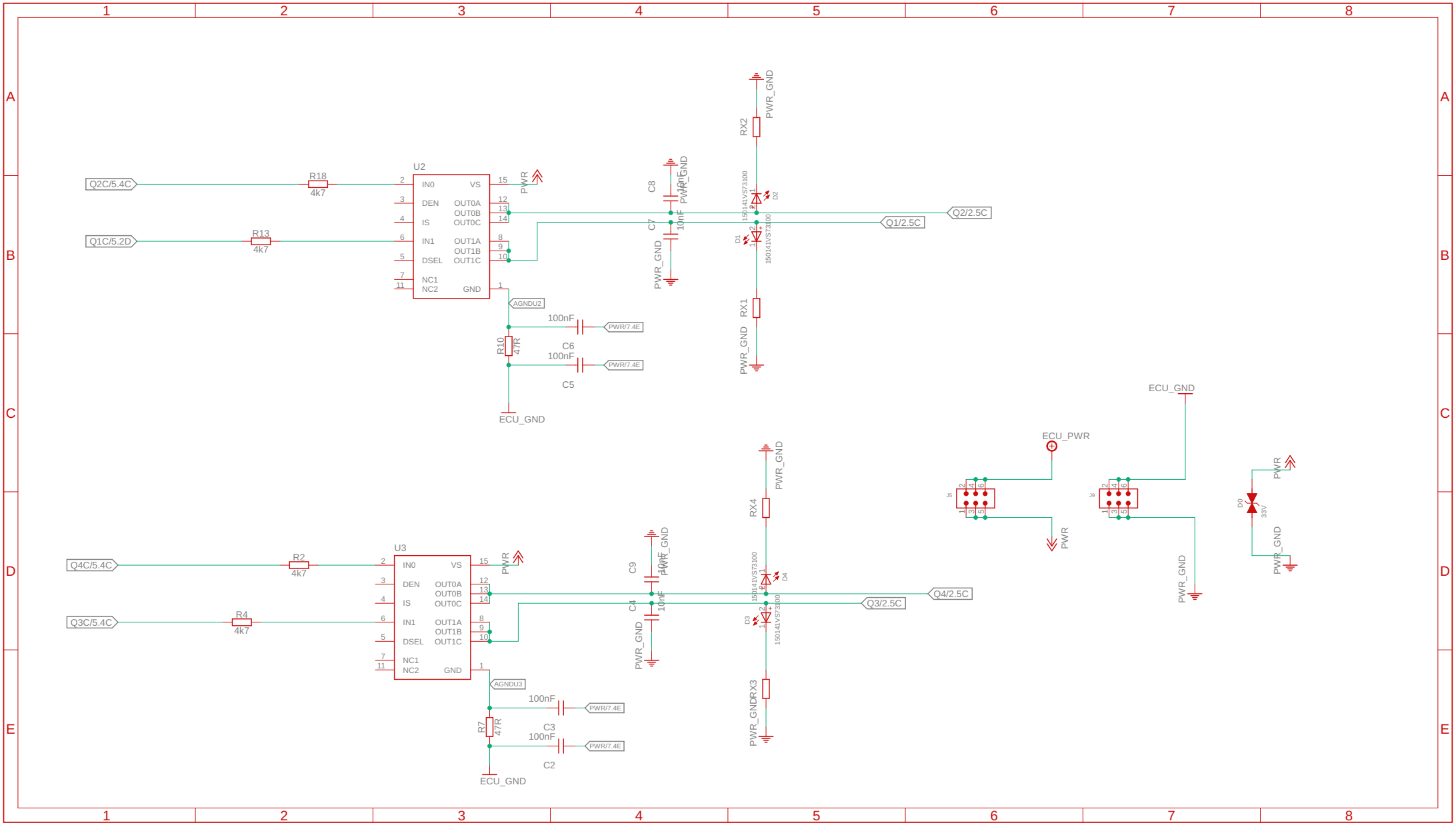

26.10.2023 15:44 f=0.74 C:\git\ms\ISOBUS_Hardware\Hutschienenmoped-XL\Hutschienenmoped_XL_12V.sch (Sheet: 6/11)

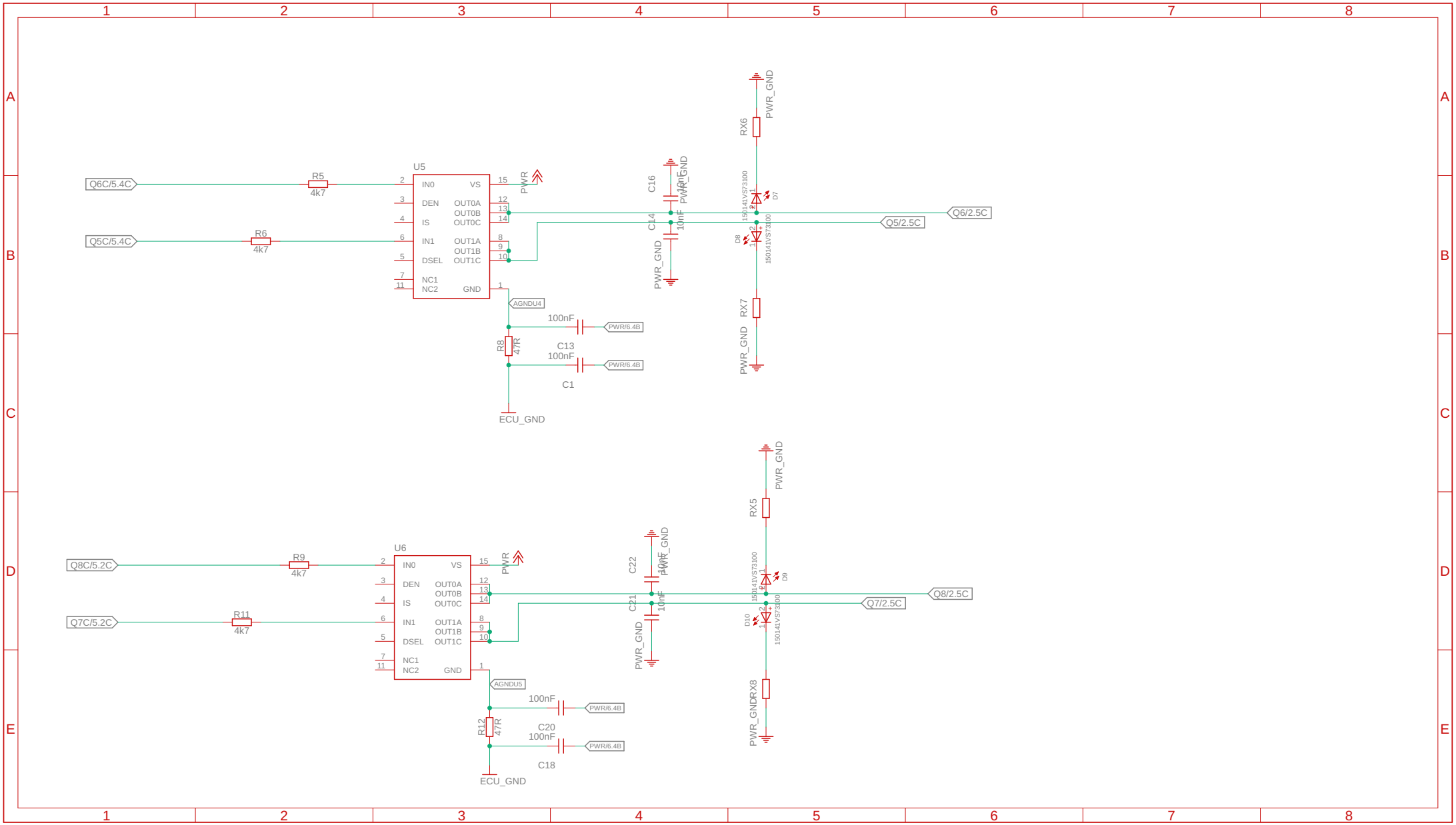
Q6C/5.4C
Q5C/5.4C
R5
4k7
R6
4k7
U5
IN0
DEN
IS
IN1
DSEL
NC1
NC2
VS
OUT0A
OUT0B
OUT0C
OUT1A
OUT1B
OUT1C
GND
PWR
AGNDU4
R8
47R
100nF
PWR/6.4B
C13
100nF
C1
ECU_GND
C16
10nF
C14
10nF
PWR_GND
RX6
RX7
150141VS73100
D7
D8
Q6/2.5C
Q5/2.5C
Q8C/5.2C
Q7C/5.2C
R9
4k7
R11
4k7
U6
AGNDU5
R12
47R
C20
100nF
C18
C22
10nF
C21
10nF
RX5
RX8
D9
D10
Q8/2.5C
Q7/2.5C

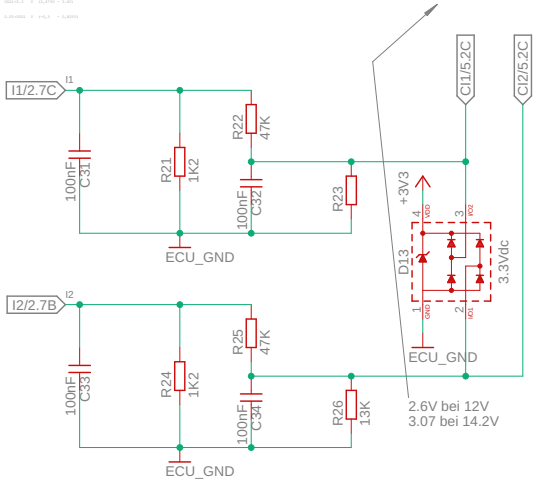
I1/2.7C
I1
100nF
C31
R21
1K2
R22
47K
100nF
C32
R23
ECU_GND
I2/2.7B
I2
100nF
C33
R24
1K2
R25
47K
100nF
C34
R26
13K
ECU_GND
+3V3
D13
GND1
VDD1
VDD2
GND2
3.3Vdc
ECU_GND
2.6V bei 12V
3.07 bei 14.2V
CI1/5.2C
CI2/5.2C

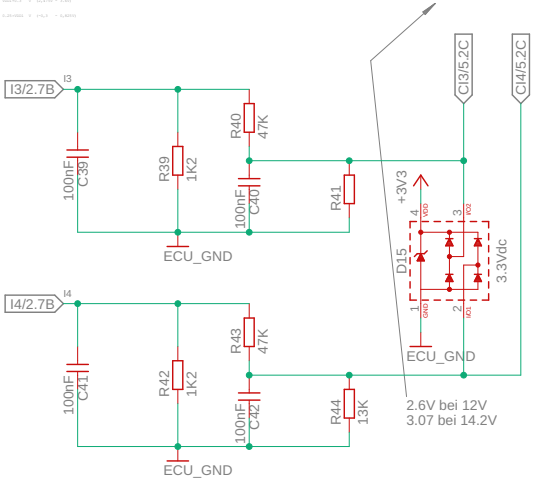
I3/2.7B
I3
100nF
C39
R39
1K2
R40
47K
100nF
C40
R41
ECU_GND
I4/2.7B
I4
100nF
C41
R42
1K2
R43
47K
100nF
C42
R44
13K
ECU_GND
+3V3
D15
4
VDD3
3
VDD
1
GND1
2
VD1
3.3Vdc
ECU_GND
2.6V bei 12V
3.07 bei 14.2V
CI3/5.2C
CI4/5.2C

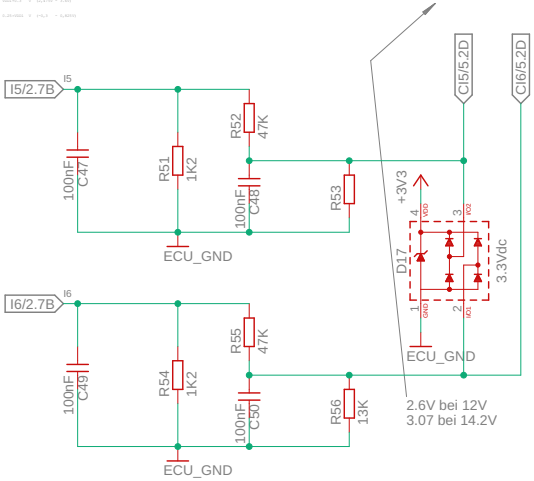
I5/2.7B
I5
100nF
C47
R51
1K2
R52
47K
100nF
C48
R53
ECU_GND
I6/2.7B
I6
100nF
C49
R54
1K2
R55
47K
100nF
C50
R56
13K
ECU_GND
+3V3
D17
GND1
VDD1
VDD2
GND2
3.3Vdc
ECU_GND
2.6V bei 12V
3.07 bei 14.2V
CI5/5.2D
CI6/5.2D

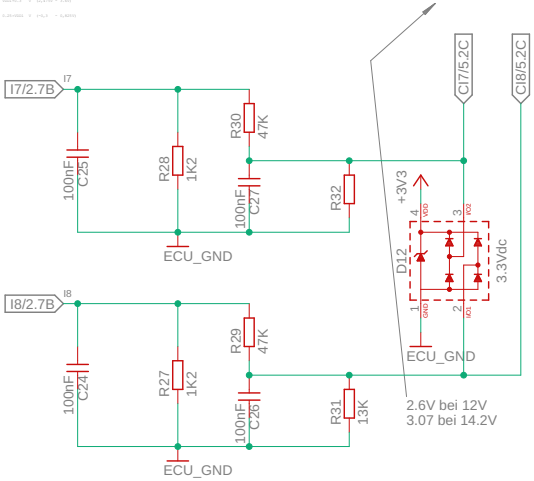
I7/2.7B
I7
100nF
C25
R28
1K2
R30
47K
100nF
C27
R32
ECU_GND
I8/2.7B
I8
100nF
C24
R27
1K2
R29
47K
100nF
C26
R31
13K
ECU_GND
+3V3
D12
GND1
VDD1
VDD2
GND2
3.3Vdc
ECU_GND
2.6V bei 12V
3.07 bei 14.2V
CI7/5.2C
CI8/5.2C