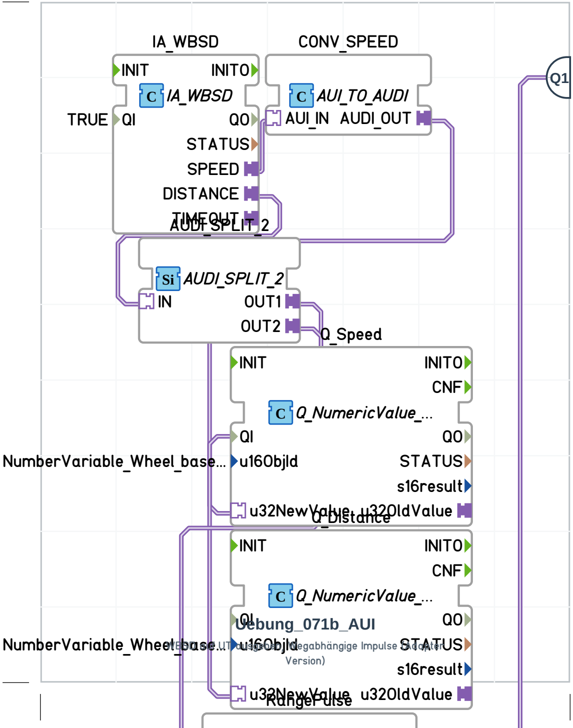

Uebung_071b_AUI

WBSD auf UT ausgeben, Wegabhängige Impulse (Adapter Version)

IA_WBSD
INIT
INITO
IA_WBSD
TRUE
QI
QO
STATUS
SPEED
DISTANCE
TIMEOUT
CONV_SPEED
AUI_TO_AUDI
AUI_IN
AUDI_OUT
Q1
AUDI_SPLIT_2
AUDI_SPLIT_2
IN
OUT1
OUT2
Q_Speed
INIT
INITO
CNF
Q_NumericValue_...
QI
QO
NumberVariable_Wheel_base...
u16ObjId
STATUS
s16result
u32NewValue
u32OldValue
Q_Distance
INIT
INITO
CNF
Q_NumericValue_...
QI
QO
NumberVariable_Wheel_base...
u16ObjId
STATUS
s16result
u32NewValue
u32OldValue
RangePulse