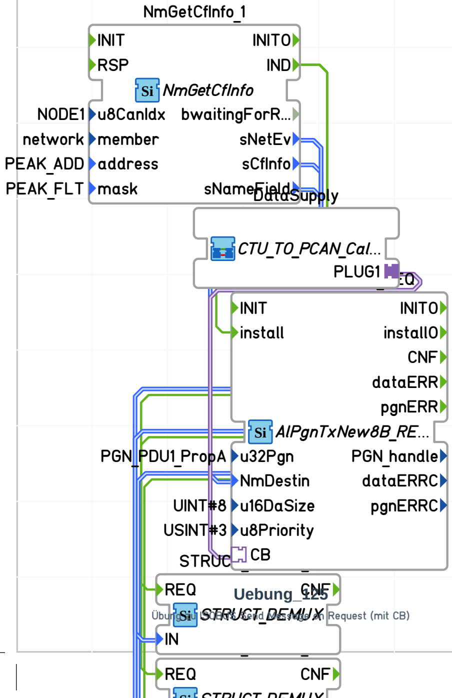
NmGetCfInfo_1
INIT
INITO
RSP
IND
NmGetCfInfo
NODE1
u8CanIdx
bwaitingForR...
network
member
sNetEv
PEAK_ADD
address
sCfInfo
PEAK_FLT
mask
sNameField
DataSupply
CTU_TO_PCAN_Cal...
PLUG1
_REQ
INIT
INITO
install
installO
CNF
dataERR
pgnERR
AIPgnTxNew8B_RE...
PGN_PDU1_PropA
u32Pgn
PGN_handle
NmDestin
dataERRC
UINT#8
u16DaSize
pgnERRC
USINT#3
u8Priority
STRUC
CB
REQ
CNF
STRUCT_DEMUX
IN
REQ
CNF
STRUCT_DEMUX

Uebung_125

Übung zu ISOBUS Send Message on Request (mit CB)