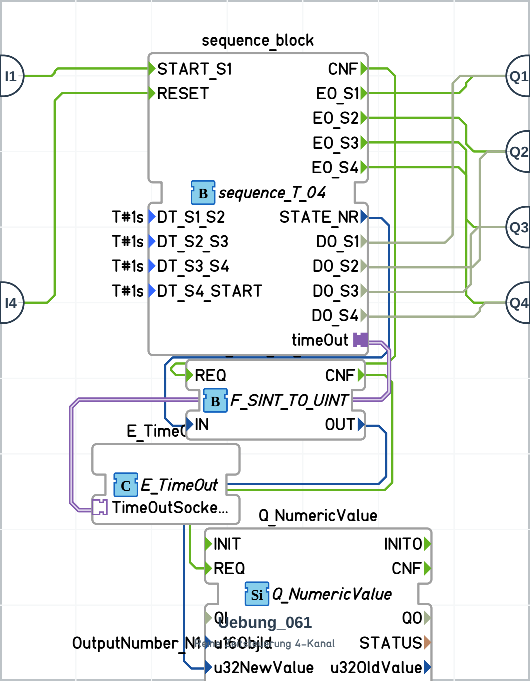
sequence_block
I1
I4
Q1
Q2
Q3
Q4
START_S1
RESET
CNF
EO_S1
EO_S2
EO_S3
EO_S4
B
sequence_T_04
T#1s
DT_S1_S2
T#1s
DT_S2_S3
T#1s
DT_S3_S4
T#1s
DT_S4_START
STATE_NR
DO_S1
DO_S2
DO_S3
DO_S4
timeOut
REQ
CNF
B
F_SINT_TO_UINT
IN
OUT
E_TimeO
C
E_TimeOut
TimeOutSocke...
Q_NumericValue
INIT
INITO
REQ
CNF
Si
Q_NumericValue
QI
QO
Uebung_061
OutputNumber_N1
u16ObjId
Reine Zeitsteuerung 4-Kanal
STATUS
u32NewValue
u32OldValue