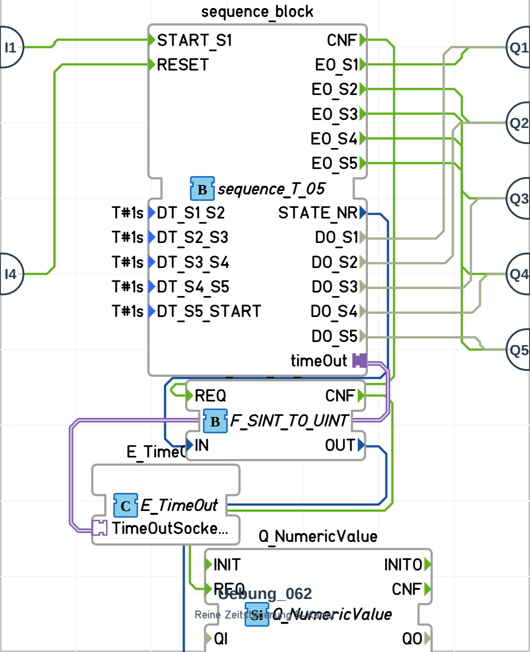
sequence_block
I1
I4
START_S1
RESET
CNF
EO_S1
EO_S2
EO_S3
EO_S4
EO_S5
B sequence_T_05
T#1s DT_S1_S2
T#1s DT_S2_S3
T#1s DT_S3_S4
T#1s DT_S4_S5
T#1s DT_S5_START
STATE_NR
DO_S1
DO_S2
DO_S3
DO_S4
DO_S5
timeOut
Q1
Q2
Q3
Q4
Q5
REQ
CNF
B F_SINT_TO_UINT
IN
OUT
E_TimeO
C E_TimeOut
TimeOutSocke...
Q_NumericValue
INIT
INITO
REQ
CNF
Uebung_062
Reine Zeitsteuerung 5-Kanal
Si Q_NumericValue
QI
QO