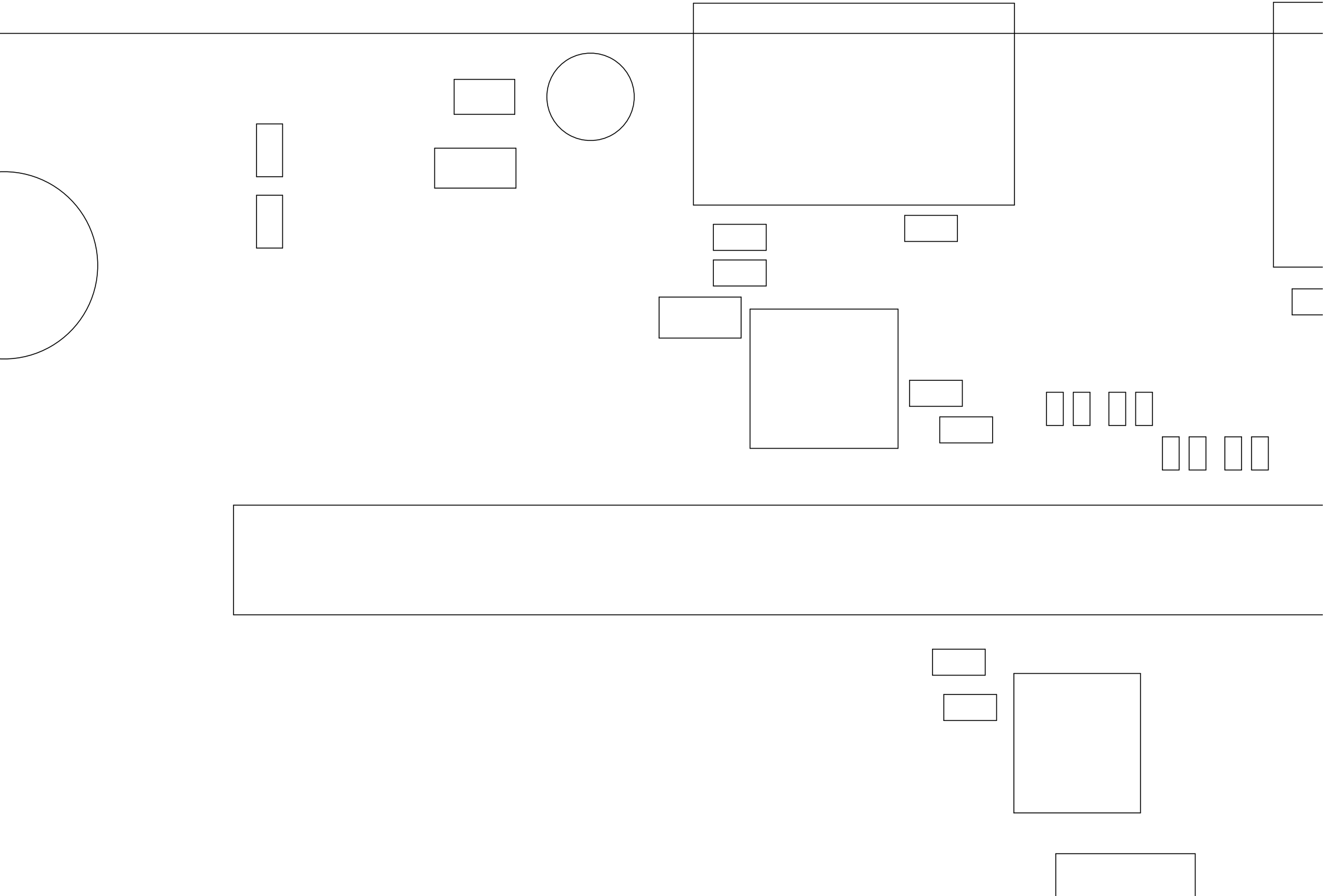

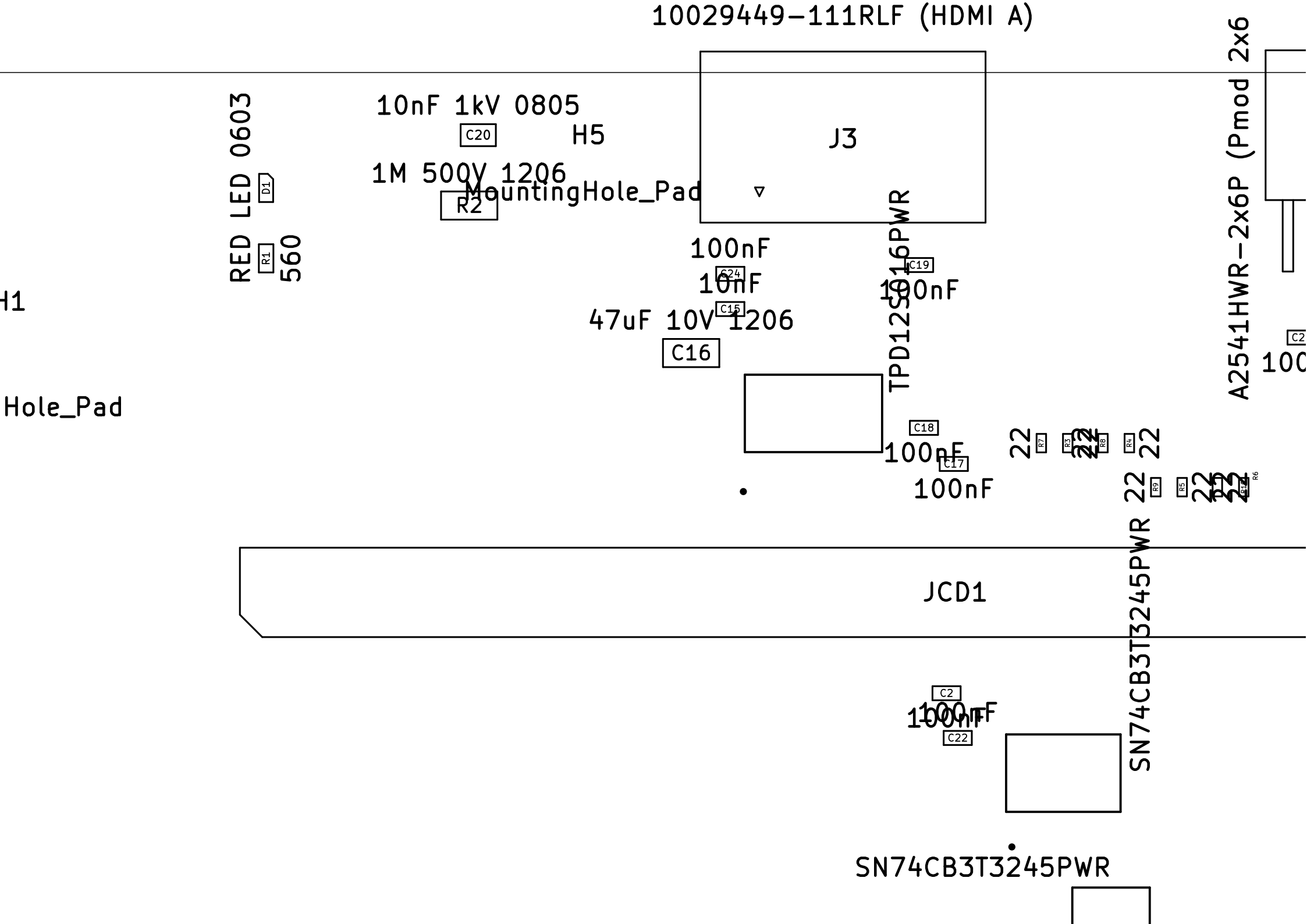
10029449-111RLF (HDMI A)
J3
A2541HWR-2x6P (Pmod 2x6
10nF 1kV 0805
C20
H5
1M 500V 1206
MountingHole_Pad
R2
RED LED 0603
D1
R1
560
H1
Hole_Pad
100nF
C24
10nF
C15
47uF 10V 1206
C16
TPD12S016PWR
C19
100nF
C18
100nF
C17
100nF
22
R7
R3
R8
R4
R9
R5
R6
JCD1
SN74CB3T3245PWR
C2
100nF
C22
SN74CB3T3245PWR