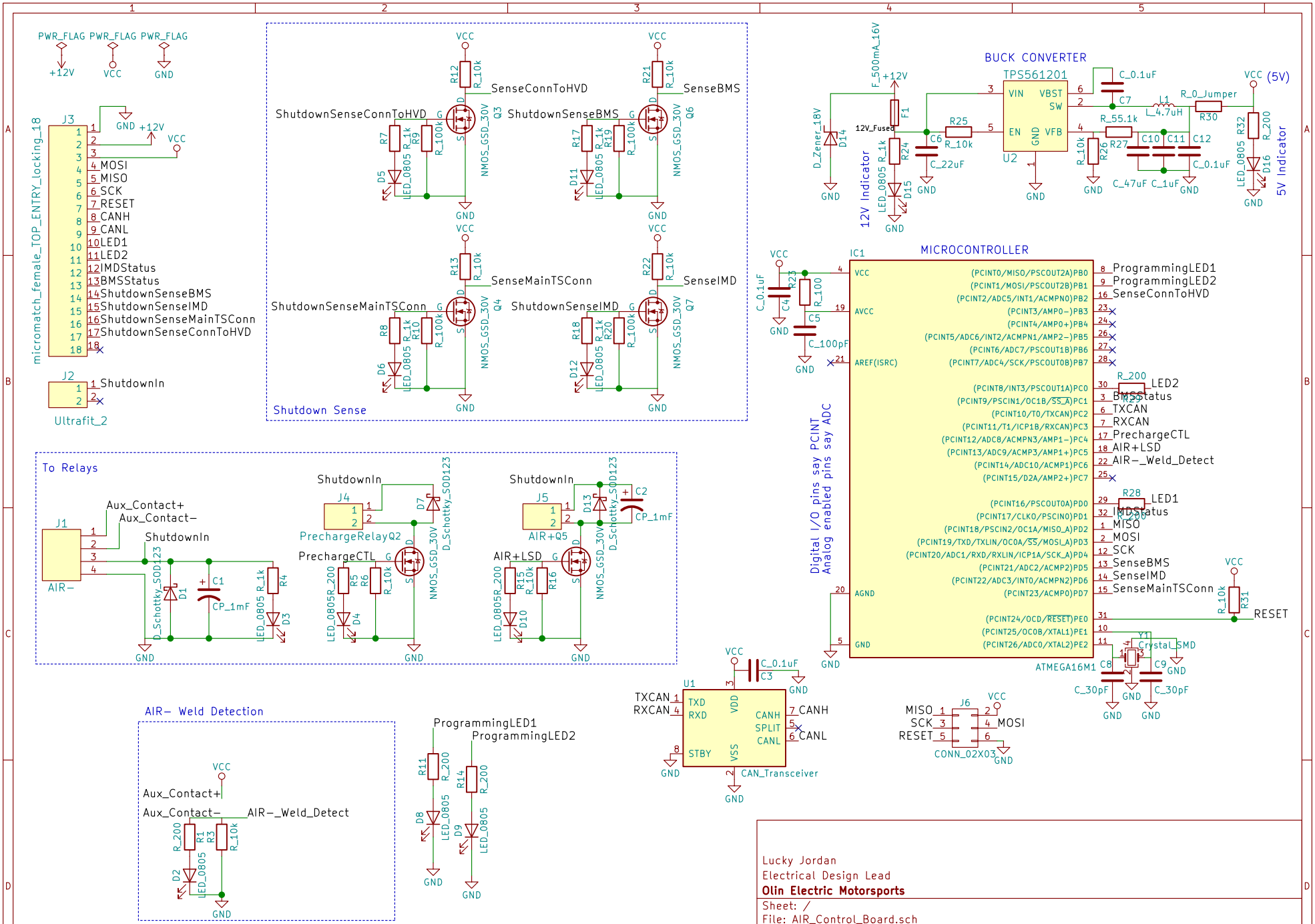

Lucky Jordan
Electrical Design Lead
Olin Electric Motorsports

Sheet: /
File: AIR_Control_Board.sch

Title: AIR Control Board 2018 MK 3

Size: A	Date: 2018-02-19	Rev: 1
KiCad E.D.A. kicad 4.0.7		Id: 1/1