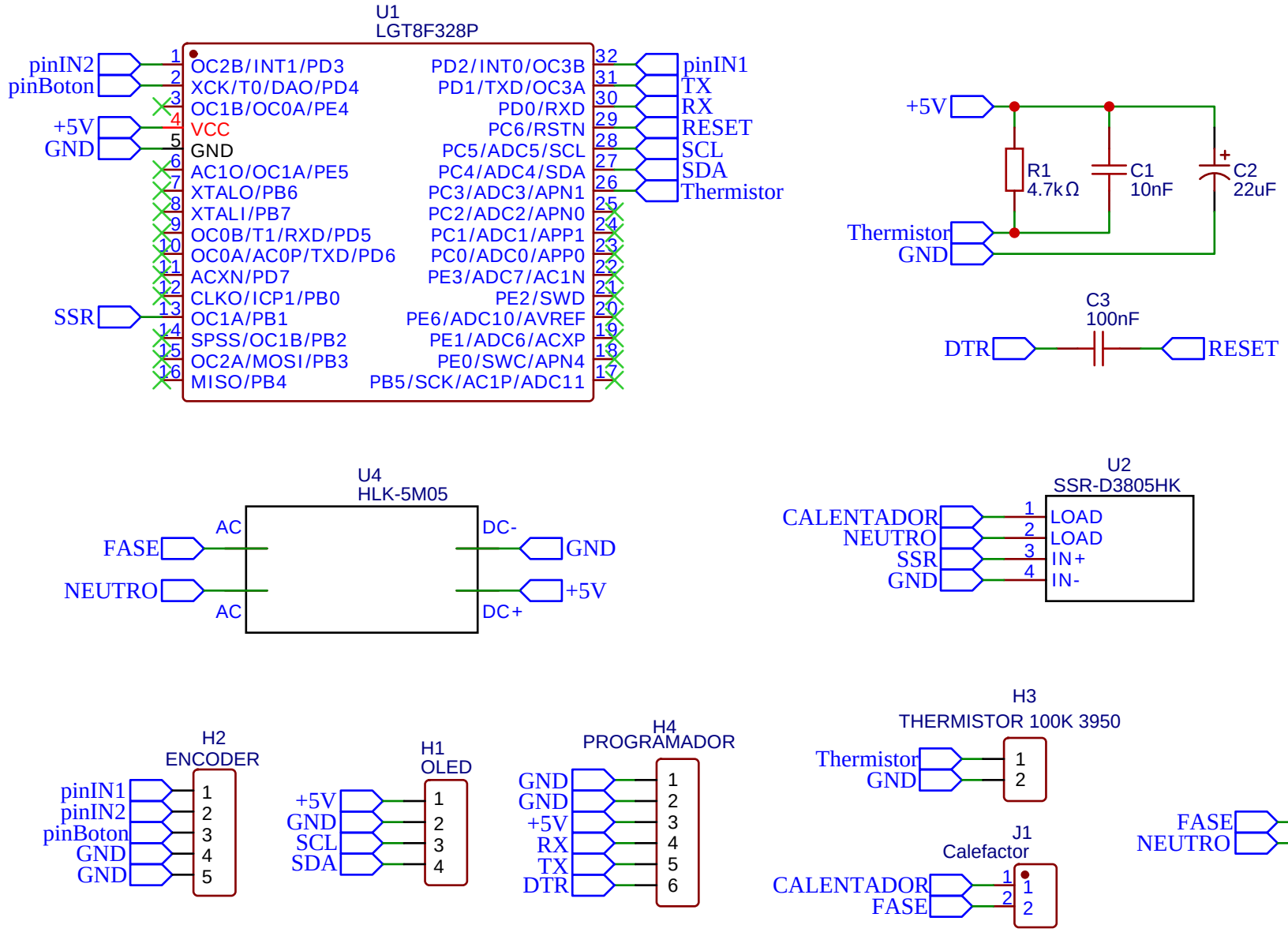

TITLE: Calefatrora 75mm x 65mm 200W		REV: 1.0
EasyEDA	Company: Luiti	Sheet: 1/1
	Date: 2024-03-29 Drawn By: Luiti	