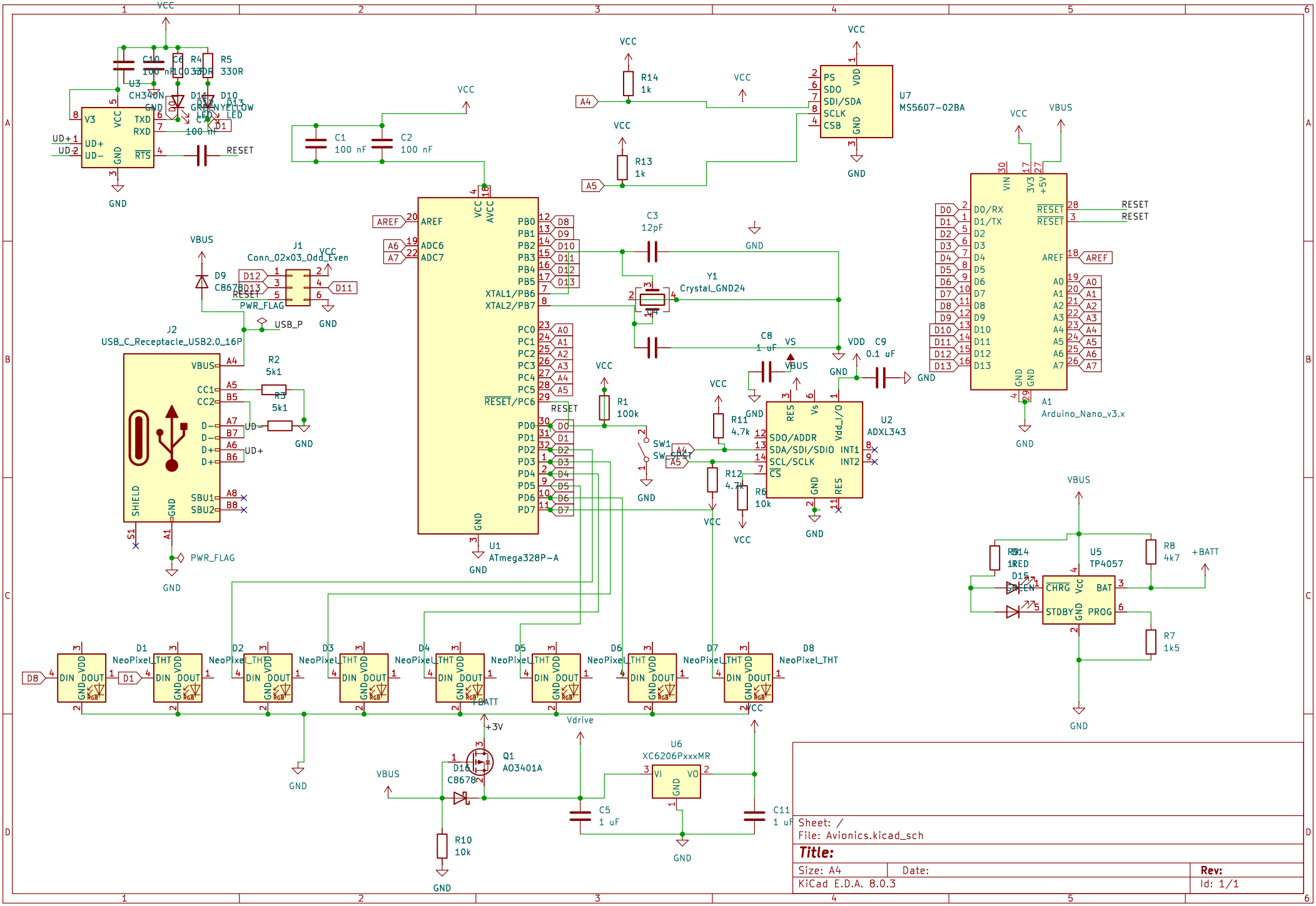

Sheet: /
File: Avionics.kicad_sch

Title:

Size: A4 | Date: | Rev:
KiCad E.D.A. 8.0.3 | Id: 1/1