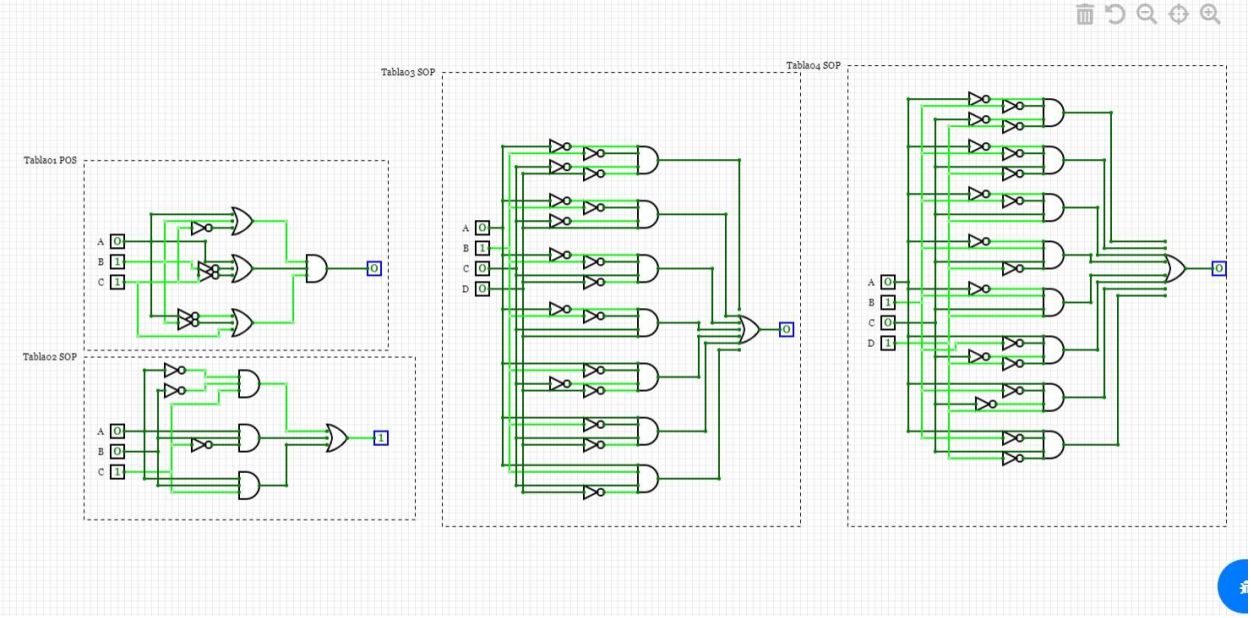
Tablao1 POS
Tablao2 SOP
Tablao3 SOP
Tablao4 SOP

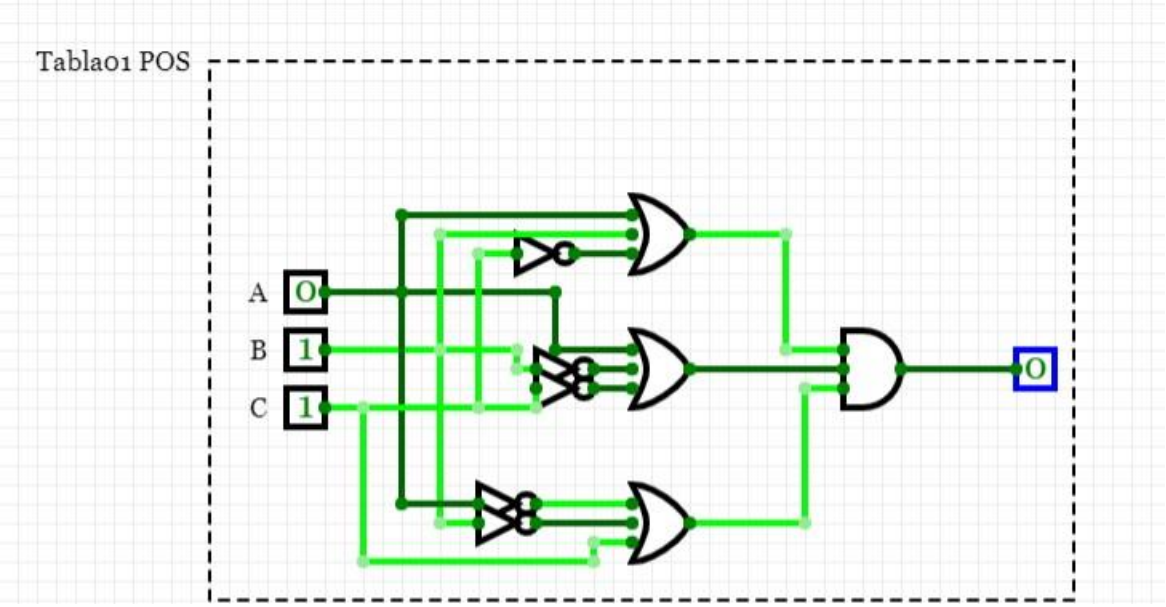
Tablao1 POS
A
0
B
1
C
1
0

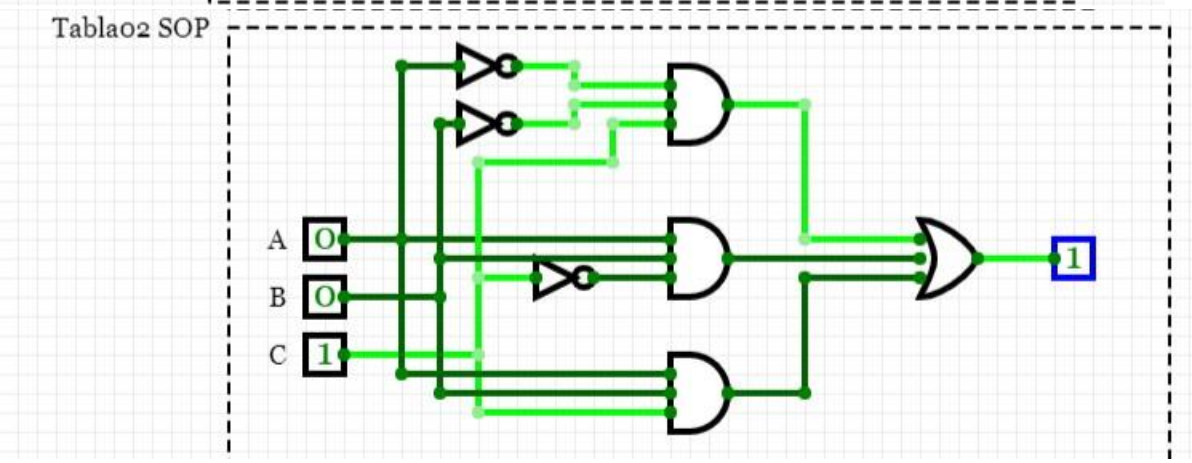
Tablao2 SOP
A
0
B
0
C
1
1

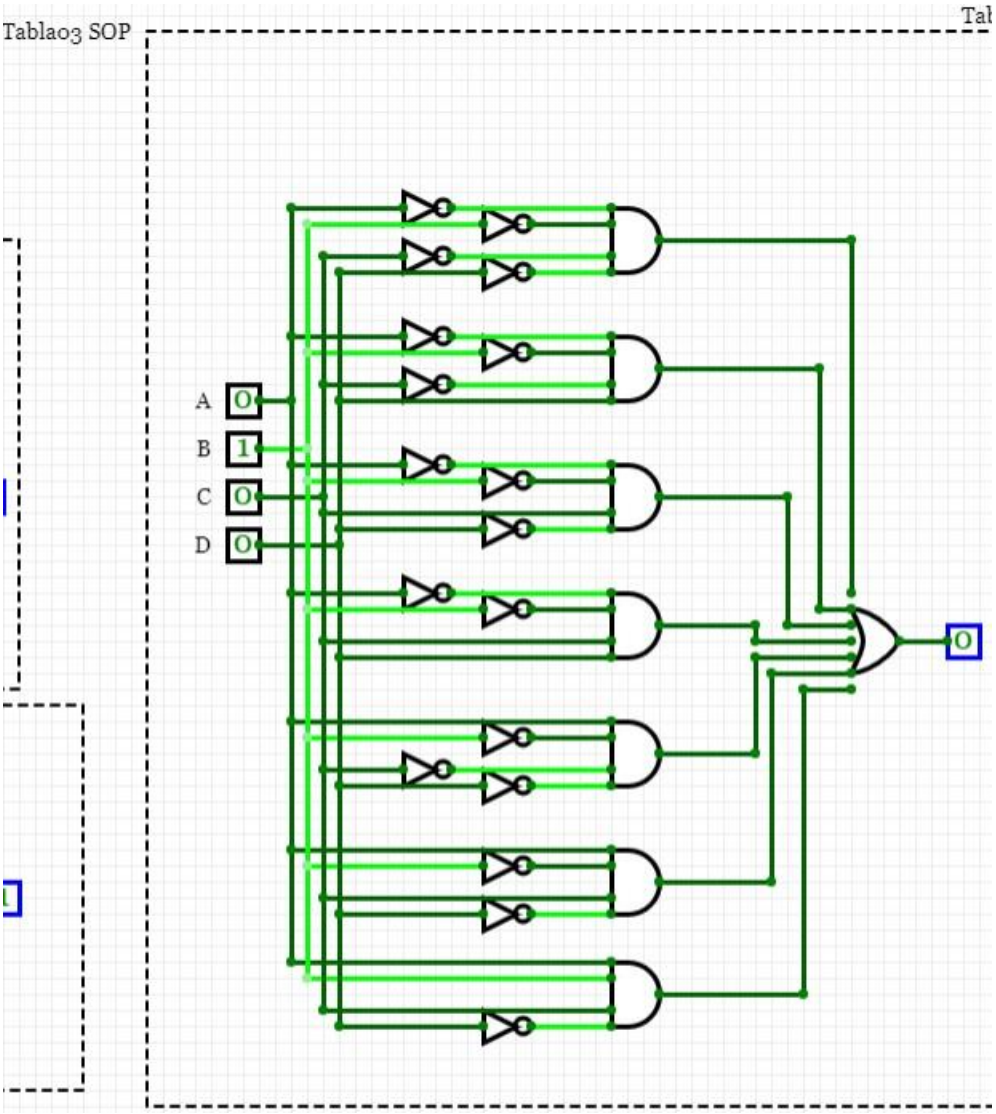
Tablao3 SOP
A
B
C
D
0
1
0
0
O

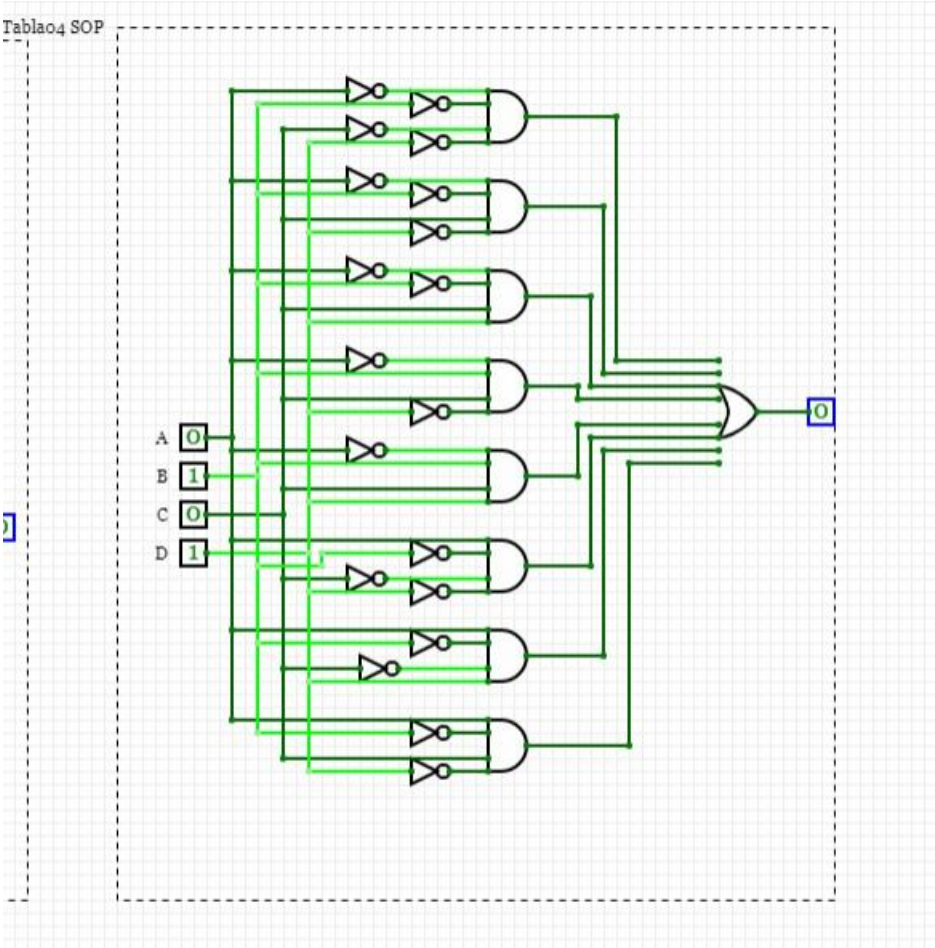
Tabla04 SOP
A
B
C
D
O

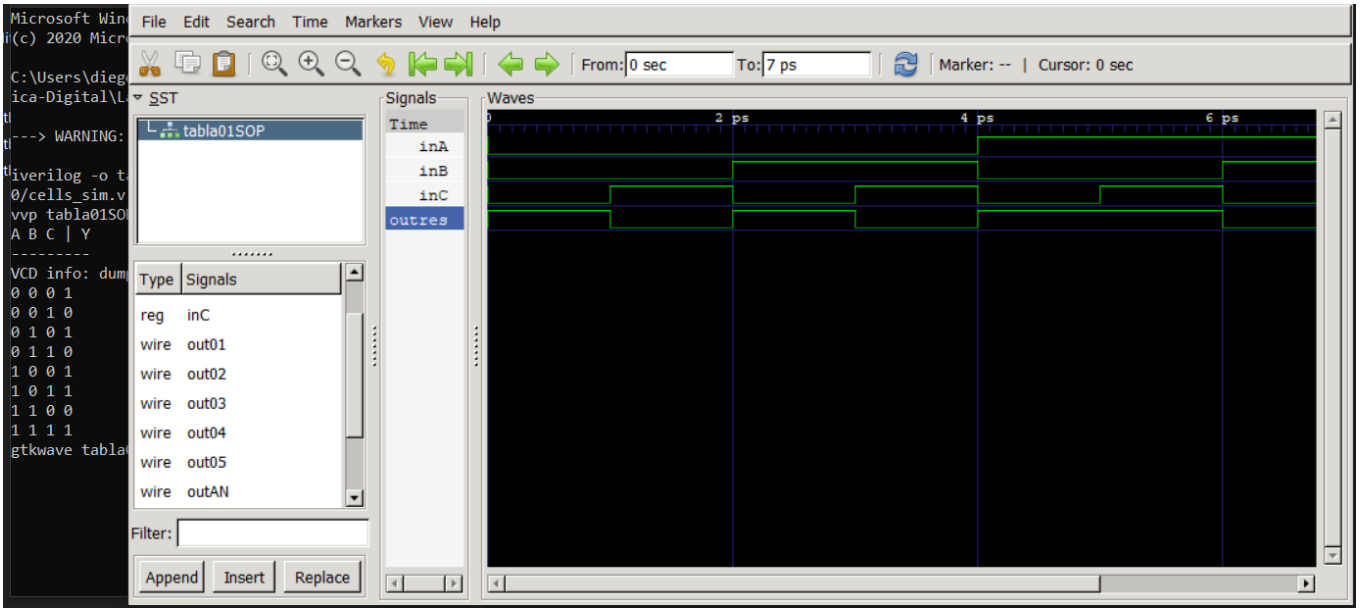
File Edit Search Time Markers View Help
From: 0 sec
To: 7 ps
Marker: -- | Cursor: 0 sec
SST
tabla01SOP
Signals
Time
inA
inB
inC
outres
Waves
2 ps
4 ps
6 ps
Type Signals
reg inC
wire out01
wire out02
wire out03
wire out04
wire out05
wire outAN
Filter:
Append
Insert
Replace
Microsoft Win
(c) 2020 Micr
C:\Users\dieg
ica-Digital\L
---> WARNING:
iverilog -o t
0/cells_sim.v
vvp tabla01SO
A B C | Y

VCD info: dum
0 0 0 1
0 0 1 0
0 1 0 1
0 1 1 0
1 0 0 1
1 0 1 1
1 1 0 0
1 1 1 1
gtkwave tabla

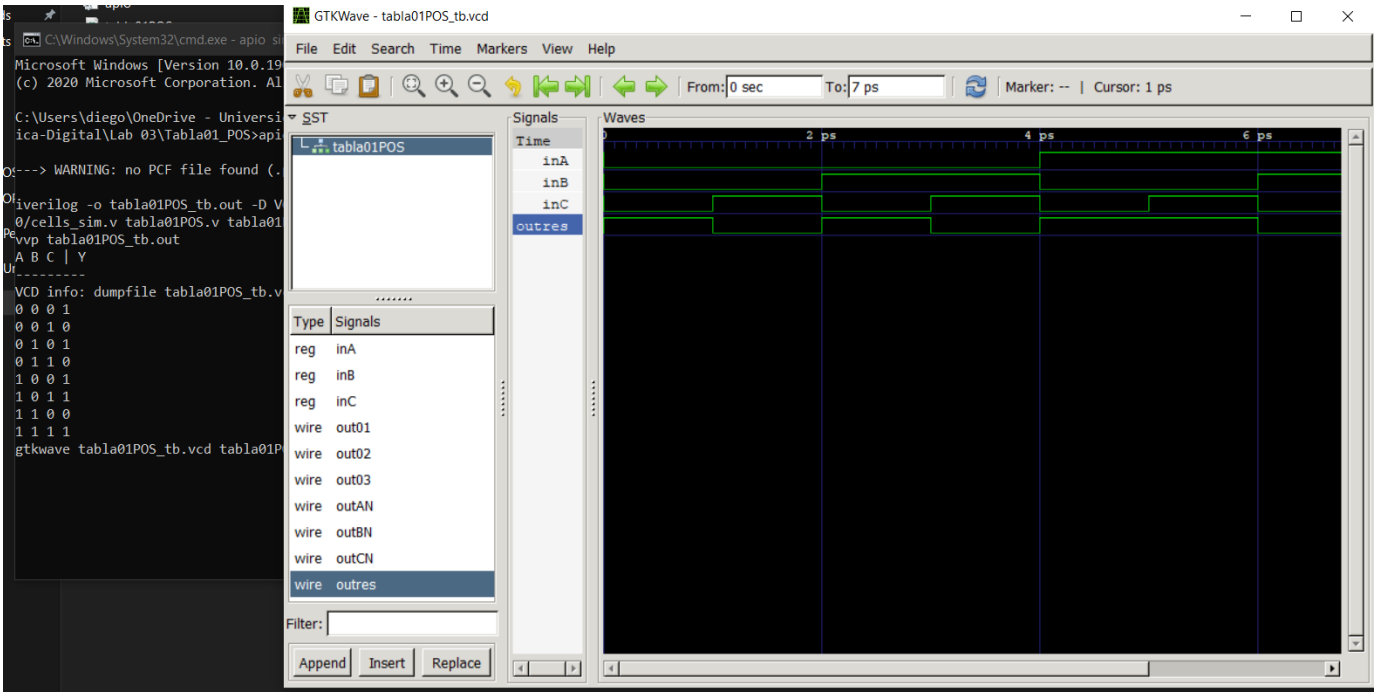
C:\Windows\System32\cmd.exe - apio si
Microsoft Windows [Version 10.0.19
(c) 2020 Microsoft Corporation. Al
C:\Users\diego\OneDrive - Universi
ica-Digital\Lab 03\Tabla01_POS>api
---> WARNING: no PCF file found (.
iverilog -o tabla01POS_tb.out -D V
0/cells_sim.v tabla01POS.v tabla01
vvp tabla01POS_tb.out
A B C | Y

VCD info: dumpfile tabla01POS_tb.v
0 0 0 1
0 0 1 0
0 1 0 1
0 1 1 0
1 0 0 1
1 0 1 1
1 1 0 0
1 1 1 1
gtkwave tabla01POS_tb.vcd tabla01P
GTKWave - tabla01POS_tb.vcd
File Edit Search Time Markers View Help
From: 0 sec
To: 7 ps
Marker: -- | Cursor: 1 ps
SST
tabla01POS
Signals
Time
inA
inB
inC
outres
Waves
2 ps
4 ps
6 ps
Type Signals
reg inA
reg inB
reg inC
wire out01
wire out02
wire out03
wire outAN
wire outBN
wire outCN
wire outres
Filter:
Append
Insert
Replace

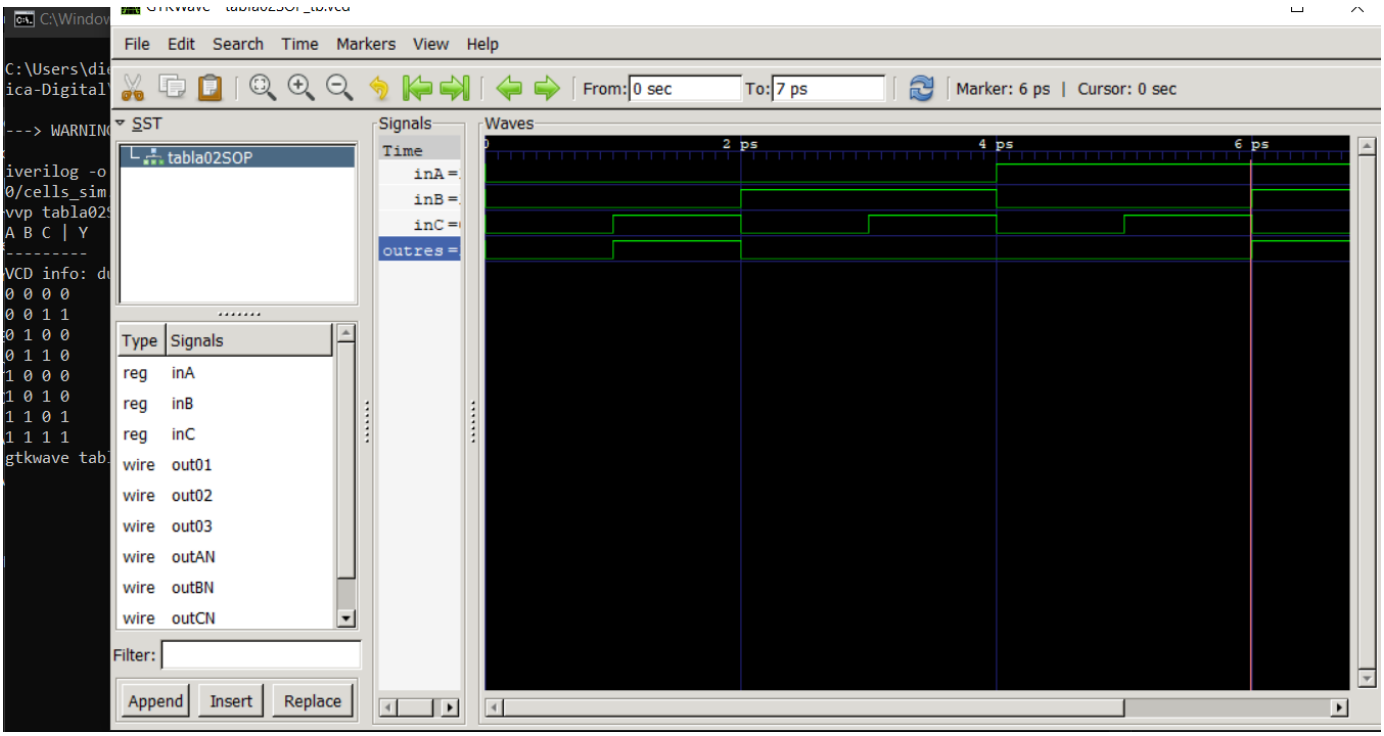
File Edit Search Time Markers View Help
From: 0 sec
To: 7 ps
Marker: 6 ps | Cursor: 0 sec
SST
tabla02SOP
Signals
Time
inA =
inB =
inC =
outres =
Waves
2 ps
4 ps
6 ps
Type Signals
reg inA
reg inB
reg inC
wire out01
wire out02
wire out03
wire outAN
wire outBN
wire outCN
Filter:
Append
Insert
Replace

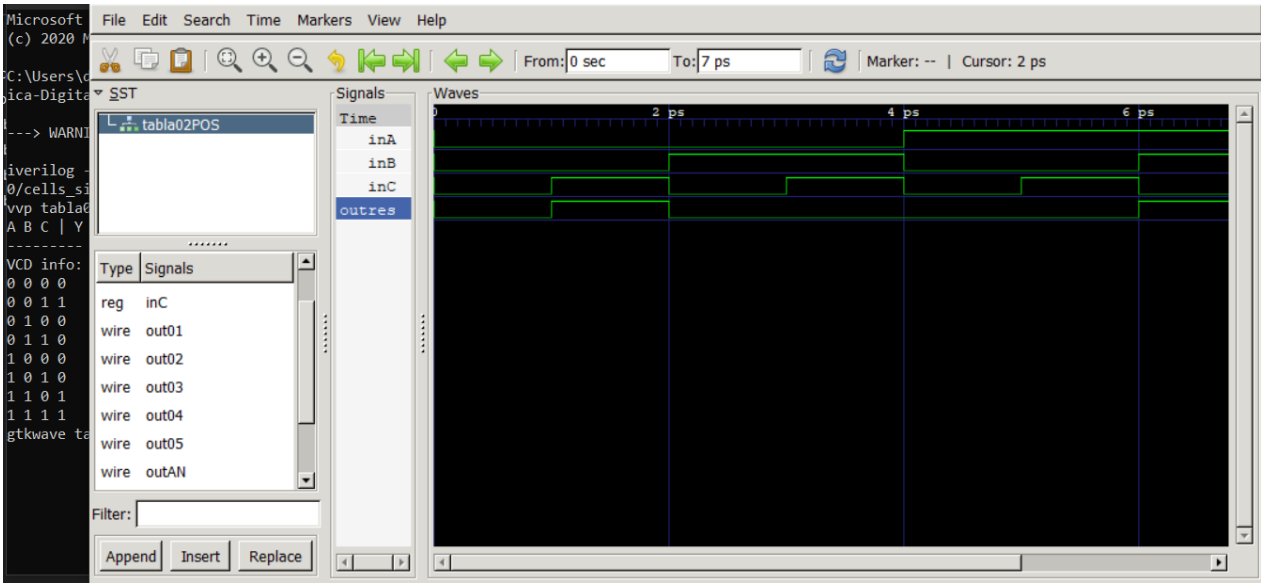
File Edit Search Time Markers View Help
From: 0 sec
To: 7 ps
Marker: -- | Cursor: 2 ps
SST
tabla02POS
Signals
Time
inA
inB
inC
outres
Waves
2 ps
4 ps
6 ps
Type Signals
reg inC
wire out01
wire out02
wire out03
wire out04
wire out05
wire outAN
Filter:
Append
Insert
Replace
--> WARNI
iverilog -
0/cells_si
vvp tabla0
A B C | Y
VCD info:
0 0 0 0
0 0 1 1
0 1 0 0
0 1 1 0
1 0 0 0
1 0 1 0
1 1 0 1
1 1 1 1
gtkwave ta

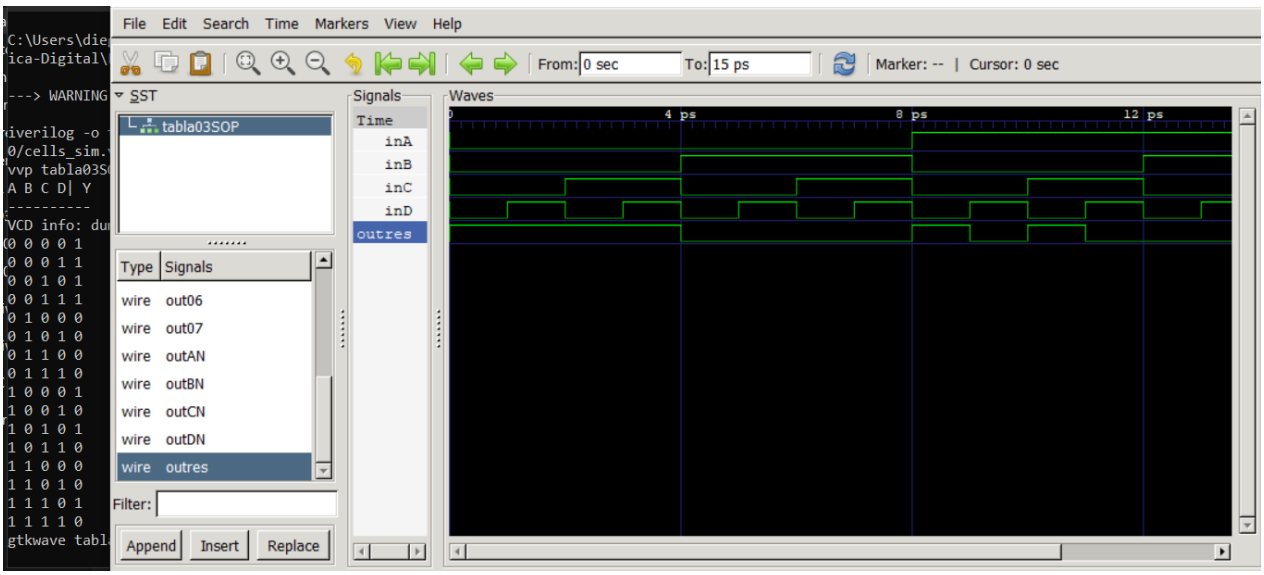
File Edit Search Time Markers View Help
From: 0 sec
To: 15 ps
Marker: -- | Cursor: 0 sec
SST
tabla03SOP
Signals
Time
inA
inB
inC
inD
outres
Waves
4 ps
8 ps
12 ps
Type Signals
wire out06
wire out07
wire outAN
wire outBN
wire outCN
wire outDN
wire outres
Filter:
Append
Insert
Replace
--> WARNING
iverilog -o
0/cells_sim.
vvp tabla03S
A B C D| Y
VCD info: du
0 0 0 0 1
0 0 0 1 1
0 0 1 0 1
0 0 1 1 1
0 1 0 0 0
0 1 0 1 0
0 1 1 0 0
0 1 1 1 0
1 0 0 0 1
1 0 0 1 0
1 0 1 0 1
1 0 1 1 0
1 1 0 0 0
1 1 0 1 0
1 1 1 0 1
1 1 1 1 0
gtkwave tabl

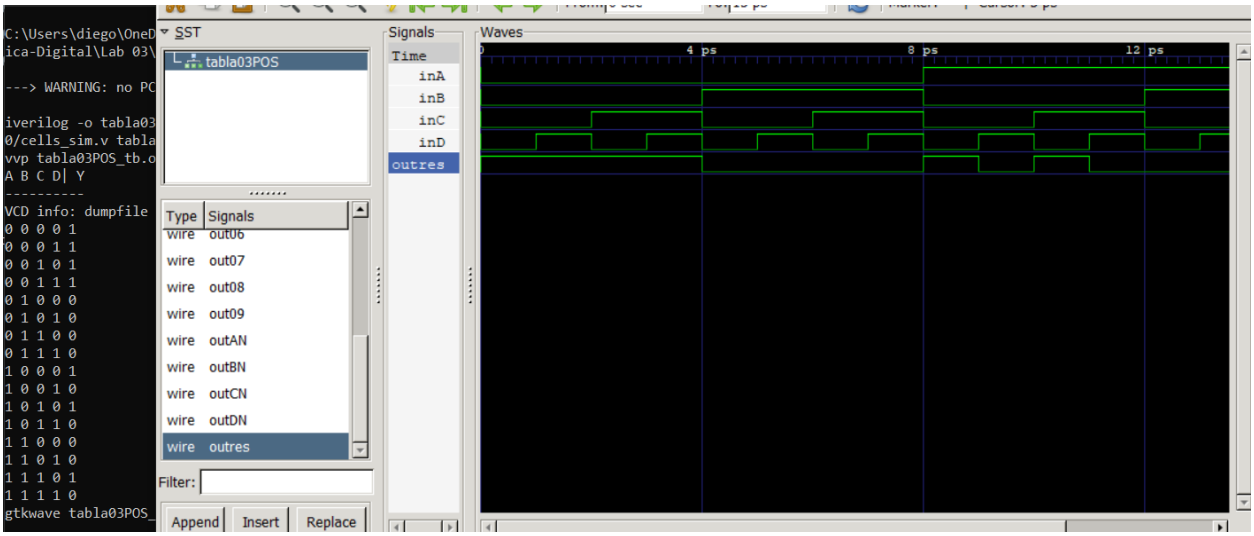
SST
tabla03POS
Signals
Time
inA
inB
inC
inD
outres
Waves
4 ps
8 ps
12 ps
Type Signals
wire out06
wire out07
wire out08
wire out09
wire outAN
wire outBN
wire outCN
wire outDN
wire outres
Filter:
Append
Insert
Replace
--> WARNING: no PC
iverilog -o tabla03
0/cells_sim.v tabla
vvp tabla03POS_tb.o
A B C D| Y
VCD info: dumpfile
0 0 0 0 1
0 0 0 1 1
0 0 1 0 1
0 0 1 1 1
0 1 0 0 0
0 1 0 1 0
0 1 1 0 0
0 1 1 1 0
1 0 0 0 1
1 0 0 1 0
1 0 1 0 1
1 0 1 1 0
1 1 0 0 0
1 1 0 1 0
1 1 1 0 1
1 1 1 1 0
gtkwave tabla03POS_

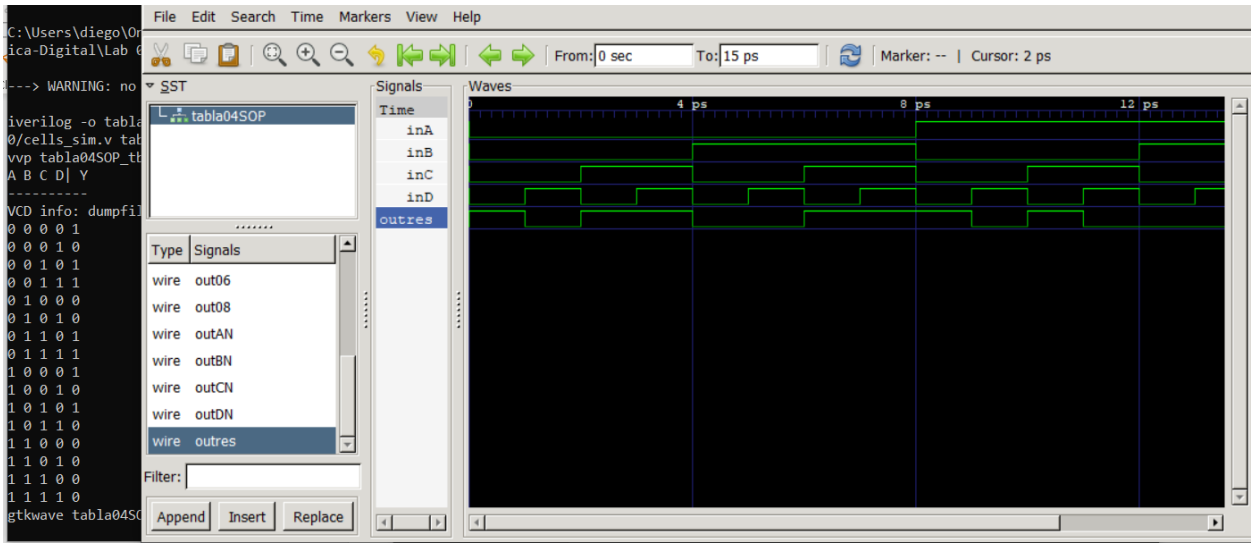
C:\Users\diego\Or
ica-Digital\Lab 0
---> WARNING: no
iverilog -o tabla
0/cells_sim.v tab
vvp tabla04SOP_tb
A B C D| Y

VCD info: dumpfil
0 0 0 0 1
0 0 0 1 0
0 0 1 0 1
0 0 1 1 1
0 1 0 0 0
0 1 0 1 0
0 1 1 0 1
0 1 1 1 1
1 0 0 0 1
1 0 0 1 0
1 0 1 0 1
1 0 1 1 0
1 1 0 0 0
1 1 0 1 0
1 1 1 0 0
1 1 1 1 0
gtkwave tabla04SO
File Edit Search Time Markers View Help
From: 0 sec
To: 15 ps
Marker: -- | Cursor: 2 ps
SST
tabla04SOP
Type Signals
wire out06
wire out08
wire outAN
wire outBN
wire outCN
wire outDN
wire outres
Filter:
Append Insert Replace
Signals
Time
inA
inB
inC
inD
outres
Waves
4 ps
8 ps
12 ps

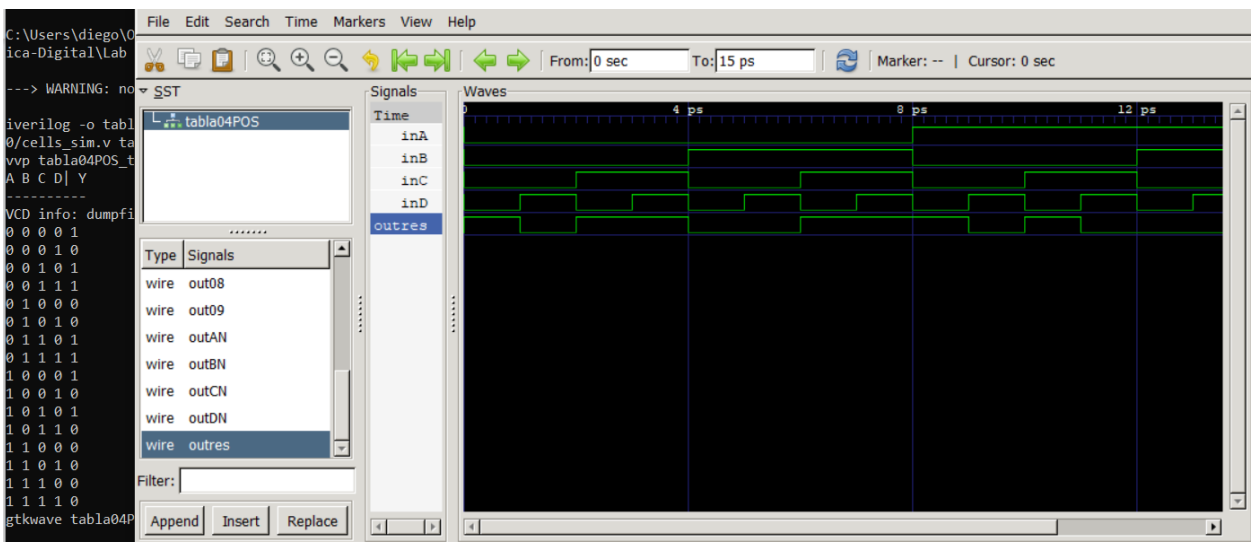
C:\Users\diego\O
ica-Digital\Lab
---> WARNING: no
iverilog -o tabl
0/cells_sim.v ta
vvp tabla04POS_t
A B C D| Y

VCD info: dumpfi
0 0 0 0 1
0 0 0 1 0
0 0 1 0 1
0 0 1 1 1
0 1 0 0 0
0 1 0 1 0
0 1 1 0 1
0 1 1 1 1
1 0 0 0 1
1 0 0 1 0
1 0 1 0 1
1 0 1 1 0
1 1 0 0 0
1 1 0 1 0
1 1 1 0 0
1 1 1 1 0
gtkwave tabla04P
File Edit Search Time Markers View Help
From: 0 sec
To: 15 ps
Marker: -- | Cursor: 0 sec
SST
tabla04POS
Type Signals
wire out08
wire out09
wire outAN
wire outBN
wire outCN
wire outDN
wire outres
Filter:
Append Insert Replace
Signals
Time
inA
inB
inC
inD
outres
Waves
4 ps
8 ps
12 ps