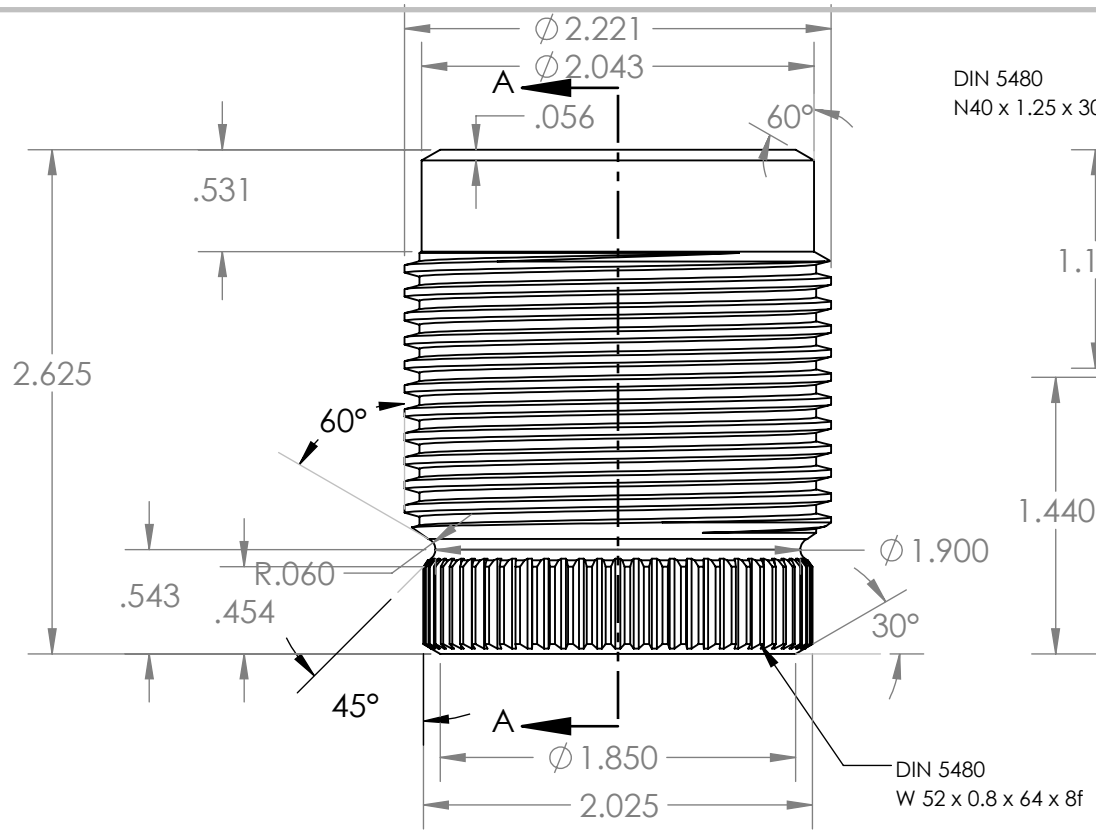

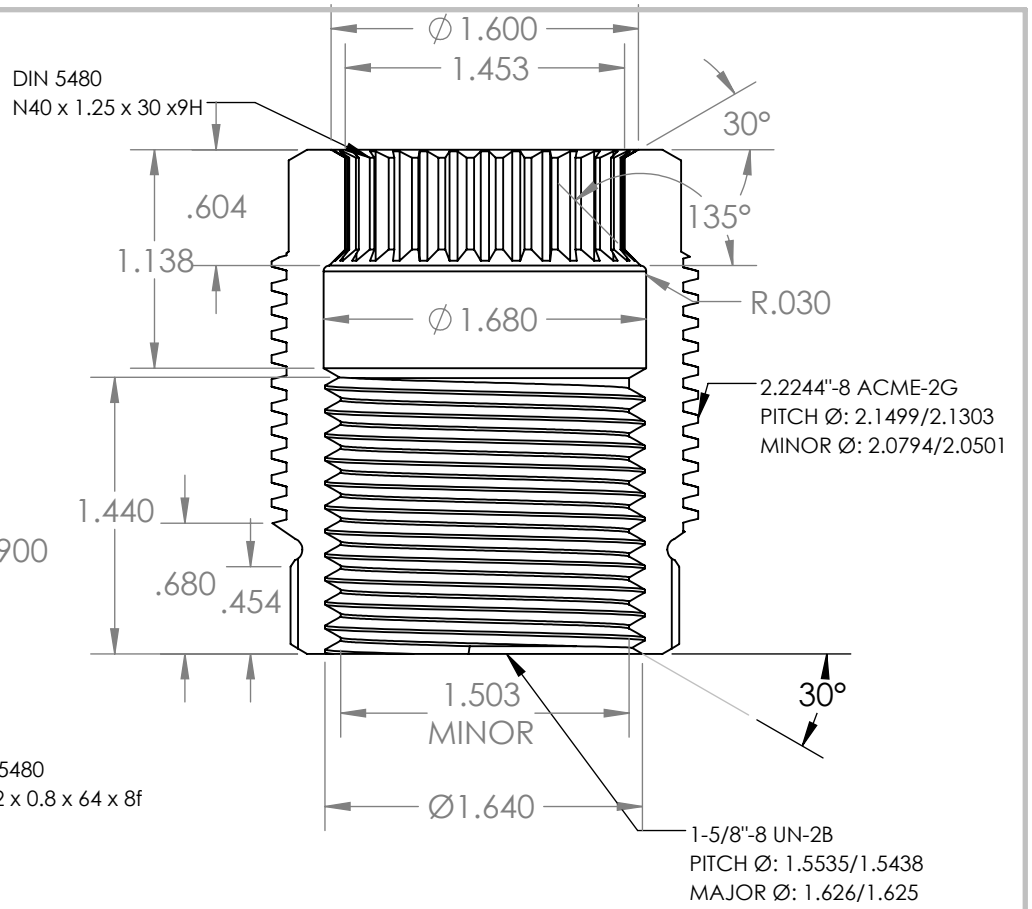

SECTION A-A

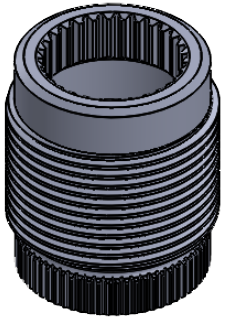

UNLESS OTHERWISE SPECIFIED: DIMENSIONS ARE IN MILLIMETERS SURFACE FINISH: TOLERANCES: LINEAR: ANGULAR: +/-.015	FINISH: 125 RMS			DEBURR AND BREAK SHARP EDGES	DO NOT SCALE DRAWING	REVISION
	NAME	SIGNATURE	DATE		TITLE: 3-PIECE NUT - INNER PIECE	
DRAWN						
CHK'D						
APPV'D						
MFG						
Q.A				MATERIAL: AISI 4340 OR 4140	DWG NO. EF103702	A4
				WEIGHT: 1.07 lbs	SCALE:1:1	SHEET 1 OF 1

SOLIDWORKS Educational Product. For Instructional Use Only.